UNITED STATES PATENT AND TRADEMARK OFFICE

UNITED STATES DEPARTMENT OF COMMERCE
United States Patent and Trademark Office
Address: COMMISSIONER FOR PATENTS
P.O. Box 1450
Alexandria, Virginia 22313-1450
www.uspto.gov

APPLICATION NO.	ISSUE DATE	PATENT NO.	ATTORNEY DOCKET NO.	CONFIRMATION NO.
10/101,644	09/09/2008	7424438	15703.10002	8626

66714 7590 08/20/2008

INTELLECTUAL PROPERTY CENTER, LLC
9233 WARD PARKWAY
SUITE 100
KANSAS CITY, MO 64114

ISSUE NOTIFICATION

The projected patent number and issue date are specified above.

Determination of Patent Term Adjustment under 35 U.S.C. 154 (b)
(application filed on or after May 29, 2000)

The Patent Term Adjustment is 183 day(s). Any patent to issue from the above-identified application will include an indication of the adjustment on the front page.

If a Continued Prosecution Application (CPA) was filed in the above-identified application, the filing date that determines Patent Term Adjustment is the filing date of the most recent CPA.

Applicant will be able to obtain more detailed information by accessing the Patent Application Information Retrieval (PAIR) WEB site (http://pair.uspto.gov).

Any questions regarding the Patent Term Extension or Adjustment determination should be directed to the Office of Patent Legal Administration at (571)-272-7702. Questions relating to issue and publication fee payments should be directed to the Customer Service Center of the Office of Patent Publication at (571)-272-4200.

APPLICANT(s) (Please see PAIR WEB site http://pair.uspto.gov for additional applicants):

Marc Vianello, Overland Park, KS;

UNITED STATES PATENT AND TRADEMARK OFFICE

UNITED STATES DEPARTMENT OF COMMERCE
United States Patent and Trademark Office
Address: COMMISSIONER FOR PATENTS
P.O. Box 1450
Alexandria, Virginia 22313-1450
www.uspto.gov

APPLICATION NUMBER	FILING OR 371(C) DATE	FIRST NAMED APPLICANT	ATTY. DOCKET NO./TITLE
10/101,644	03/19/2002	Marc Vianello	15703.10002

CONFIRMATION NO. 8626

66714
INTELLECTUAL PROPERTY CENTER, LLC
9233 WARD PARKWAY
SUITE 100
KANSAS CITY, MO 64114

POA ACCEPTANCE LETTER

OC000000031514369

Date Mailed: 08/12/2008

NOTICE OF ACCEPTANCE OF POWER OF ATTORNEY

This is in response to the Power of Attorney filed 08/07/2008.

The Power of Attorney in this application is accepted. Correspondence in this application will be mailed to the above address as provided by 37 CFR 1.33.

/bcrittenden/

Office of Data Management, Application Assistance Unit (571) 272-4000, or (571) 272-4200, or 1-888-786-0101

UNITED STATES PATENT AND TRADEMARK OFFICE

UNITED STATES DEPARTMENT OF COMMERCE
United States Patent and Trademark Office
Address: COMMISSIONER FOR PATENTS
P.O. Box 1450
Alexandria, Virginia 22313-1450
www.uspto.gov

APPLICATION NUMBER	FILING OR 371(C) DATE	FIRST NAMED APPLICANT	ATTY. DOCKET NO./TITLE
10/101,644	03/19/2002	Marc Vianello	15703.10002

CONFIRMATION NO. 8626

POWER OF ATTORNEY NOTICE

27128
HUSCH BLACKWELL SANDERS LLP
720 OLIVE STREET
SUITE 2400
ST. LOUIS, MO 63101

OC000000031514360

Date Mailed: 08/12/2008

NOTICE REGARDING CHANGE OF POWER OF ATTORNEY

This is in response to the Power of Attorney filed 08/07/2008.

- The Power of Attorney to you in this application has been revoked by the applicant. Future correspondence will be mailed to the new address of record(37 CFR 1.33).

/bcrittenden/

Office of Data Management, Application Assistance Unit (571) 272-4000, or (571) 272-4200, or 1-888-786-0101

Monster Worldwide, Inc. Exhibit 1010 (p.3/1328)

UNITED STATES PATENT AND TRADEMARK OFFICE

UNITED STATES DEPARTMENT OF COMMERCE
United States Patent and Trademark Office
Address: COMMISSIONER FOR PATENTS
P.O. Box 1450
Alexandria, Virginia 22313-1450
www.uspto.gov

CONFIRMATION NO. 8626

Bib Data Sheet

SERIAL NUMBER	FILING OR 371(c) DATE	CLASS	GROUP ART UNIT	ATTORNEY DOCKET NO.
10/101,644	03/19/2002 RULE	705	3623	15703.10002

APPLICANTS

Marc Vianello, Overland Park, KS;

** CONTINUING DATA **********

** FOREIGN APPLICATIONS **********

IF REQUIRED, FOREIGN FILING LICENSE GRANTED ** SMALL ENTITY **
** 04/30/2002

Foreign Priority claimed	STATE OR COUNTRY	SHEETS DRAWING	TOTAL CLAIMS	INDEPENDENT CLAIMS
☐ yes ☐ no	KS	21	197	31

35 USC 119 (a-d) conditions met ☐ yes ☐ no ☐ Met after Allowance

Verified and Acknowledged _____ Examiner's Signature Initials

ADDRESS

66714

TITLE

APPARATUS AND METHODS FOR PROVIDING CAREER AND EMPLOYMENT SERVICES

FILING FEE RECEIVED		
3814	FEES: Authority has been given in Paper No. _____ to charge/credit DEPOSIT ACCOUNT No. _____ for following:	☐ All Fees ☐ 1.16 Fees (Filing) ☐ 1.17 Fees (Processing Ext. of time) ☐ 1.18 Fees (Issue) ☐ Other _____ ☐ Credit

RECEIVED
CENTRAL FAX CENTER
AUG 07 2008

Print Form

PTO/SB/81 (07-08)
Approved for use through 12/31/2008. OMB 0651-0035
U.S. Patent and Trademark Office; U.S. DEPARTMENT OF COMMERCE
Under the Paperwork Reduction Act of 1995, no persons are required to respond to a collection of information unless it displays a valid OMB control number.

POWER OF ATTORNEY OR REVOCATION OF POWER OF ATTORNEY WITH A NEW POWER OF ATTORNEY AND CHANGE OF CORRESPONDENCE ADDRESS

Application Number	10101644
Filing Date	03/19/2002
First Named Inventor	Marc Vianello
Title	Apparatus and Methods for Providing Career and Employment Services
Art Unit	3623
Examiner Name	Romain Jeanty
Attorney Docket Number	15703-10002

I hereby revoke all previous powers of attorney given in the above-identified application.

☐ A Power of Attorney is submitted herewith.

OR

☒ I hereby appoint Practitioner(s) associated with the following Customer Number as my/our attorney(s) or agent(s) to prosecute the application identified above, and to transact all business in the United States Patent and Trademark Office connected therewith: 66714

OR

☐ I hereby appoint Practitioner(s) named below as my/our attorney(s) or agent(s) to prosecute the application identified above, and to transact all business in the United States Patent and Trademark Office connected therewith:

Practitioner(s) Name	Registration Number

Please recognize or change the correspondence address for the above-identified application to:

☒ The address associated with the above-mentioned Customer Number.

OR

☐ The address associated with Customer Number:

OR

☐ Firm or Individual Name	Arthur K. Shaffer/Intellectual Property Center				
Address	9233 Ward Parkway, Suite 100				
City	Kansas City	State	MO	Zip	64114
Country	United States				
Telephone	816-363-1555	Email	ashaffer@theIPCenter.com		

I am the:

☒ Applicant/Inventor.

OR

☐ Assignee of record of the entire interest. See 37 CFR 3.71.
Statement under 37 CFR 3.73(b) (Form PTO/SB/96) submitted herewith or filed on _____

SIGNATURE of Applicant or Assignee of Record

Signature	Marc Vianello	Date	8/5/08
Name	Marc Vianello	Telephone	+1 (913) 432-1331
Title and Company			

NOTE: Signatures of all the inventors or assignees of record of the entire interest or their representative(s) are required. Submit multiple forms if more than one signature is required, see below*.

☐ *Total of _____ forms are submitted.

This collection of information is required by 37 CFR 1.31, 1.32 and 1.33. The information is required to obtain or retain a benefit by the public which is to file (and by the USPTO to process) an application. Confidentiality is governed by 35 U.S.C. 122 and 37 CFR 1.11 and 1.14. This collection is estimated to take 3 minutes to complete, including gathering, preparing, and submitting the completed application form to the USPTO. Time will vary depending upon the individual case. Any comments on the amount of time you require to complete this form and/or suggestions for reducing this burden, should be sent to the Chief Information Officer, U.S. Patent and Trademark Office, U.S. Department of Commerce, P.O. Box 1450, Alexandria, VA 22313-1450. DO NOT SEND FEES OR COMPLETED FORMS TO THIS ADDRESS. SEND TO: **Commissioner for Patents, P.O. Box 1450, Alexandria, VA 22313-1450.**

If you need assistance in completing the form, call 1-800-PTO-9199 and select option 2.

Privacy Act Statement

The Privacy Act of 1974 (P.L. 93-579) requires that you be given certain information in connection with your submission of the attached form related to a patent application or patent. Accordingly, pursuant to the requirements of the Act, please be advised that: (1) the general authority for the collection of this information is 35 U.S.C. 2(b)(2); (2) furnishing of the information solicited is voluntary; and (3) the principal purpose for which the information is used by the U.S. Patent and Trademark Office is to process and/or examine your submission related to a patent application or patent. If you do not furnish the requested information, the U.S. Patent and Trademark Office may not be able to process and/or examine your submission, which may result in termination of proceedings or abandonment of the application or expiration of the patent.

The information provided by you in this form will be subject to the following routine uses:

1. The information on this form will be treated confidentially to the extent allowed under the Freedom of Information Act (5 U.S.C. 552) and the Privacy Act (5 U.S.C 552a). Records from this system of records may be disclosed to the Department of Justice to determine whether disclosure of these records is required by the Freedom of Information Act.
2. A record from this system of records may be disclosed, as a routine use, in the course of presenting evidence to a court, magistrate, or administrative tribunal, including disclosures to opposing counsel in the course of settlement negotiations.
3. A record in this system of records may be disclosed, as a routine use, to a Member of Congress submitting a request involving an individual, to whom the record pertains, when the individual has requested assistance from the Member with respect to the subject matter of the record.
4. A record in this system of records may be disclosed, as a routine use, to a contractor of the Agency having need for the information in order to perform a contract. Recipients of information shall be required to comply with the requirements of the Privacy Act of 1974, as amended, pursuant to 5 U.S.C. 552a(m).
5. A record related to an International Application filed under the Patent Cooperation Treaty in this system of records may be disclosed, as a routine use, to the International Bureau of the World Intellectual Property Organization, pursuant to the Patent Cooperation Treaty.
6. A record in this system of records may be disclosed, as a routine use, to another federal agency for purposes of National Security review (35 U.S.C. 181) and for review pursuant to the Atomic Energy Act (42 U.S.C. 218(c)).
7. A record from this system of records may be disclosed, as a routine use, to the Administrator, General Services, or his/her designee, during an inspection of records conducted by GSA as part of that agency's responsibility to recommend improvements in records management practices and programs, under authority of 44 U.S.C. 2904 and 2906. Such disclosure shall be made in accordance with the GSA regulations governing inspection of records for this purpose, and any other relevant (*i.e.*, GSA or Commerce) directive. Such disclosure shall not be used to make determinations about individuals.
8. A record from this system of records may be disclosed, as a routine use, to the public after either publication of the application pursuant to 35 U.S.C. 122(b) or issuance of a patent pursuant to 35 U.S.C. 151. Further, a record may be disclosed, subject to the limitations of 37 CFR 1.14, as a routine use, to the public if the record was filed in an application which became abandoned or in which the proceedings were terminated and which application is referenced by either a published application, an application open to public inspection or an issued patent.
9. A record from this system of records may be disclosed, as a routine use, to a Federal, State, or local law enforcement agency, if the USPTO becomes aware of a violation or potential violation of law or regulation.

OIPE
APR 2 8 2004
PATENT & TRADEMARK OFFICE

PTO/SB/08A (08-03)
Approved for use through 07/31/2006. OMB 0651-0031
U.S. Patent and Trademark Office; U.S. DEPARTMENT OF COMMERCE
Under the Paperwork Reduction Act of 1995, no persons are required to respond to a collection of information unless it contains a valid OMB control number.

Substitute for form 1449/PTO

INFORMATION DISCLOSURE STATEMENT BY APPLICANT

(Use as many sheets as necessary)

Sheet 1 of 1

Complete if Known	
Application Number	10/101,644
Filing Date	March 19, 2002
First Named Inventor	Marc Vianello
Art Unit	3623
Examiner Name	Romain Jeanty
Attorney Docket Number	15703-10002

8/5/08

U. S. PATENT DOCUMENTS

Examiner Initials*	Cite No.[1]	Document Number Number-Kind Code[2] (if known)	Publication Date MM-DD-YYYY	Name of Patentee or Applicant of Cited Document	Pages, Columns, Lines, Where Relevant Passages or Relevant Figures Appear
/RJ/		US- 5,978,768	11/02/99	Salmon et al McGovern	
/RJ/		US- 6,385,620	05/07/02	Kurzius et al	
/RJ/		US- 6,524,109	02/25/03	Lacy et al	
		US-			
		US-			
		US-			
		US-			
		US-			
		US-			
		US-			
		US-			
		US-			
		US-			
		US-			
		US-			
		US-			
		US-			
		US-			
		US-			

RECEIVED
MAY 0 4 2004
GROUP 3600

FOREIGN PATENT DOCUMENTS

Examiner Initials*	Cite No.[1]	Foreign Patent Document Country Code[3]-Number[4]-Kind Code[5] (if known)	Publication Date MM-DD-YYYY	Name of Patentee or Applicant of Cited Document	Pages, Columns, Lines, Where Relevant Passages Or Relevant Figures Appear	T[6]

Examiner Signature	/Romain Jeanty/ (03/15/2008)	Date Considered	

*EXAMINER: Initial if reference considered, whether or not citation is in conformance with MPEP 609. Draw line through citation if not in conformance and not considered. Include copy of this form with next communication to applicant. [1] Applicant's unique citation designation number (optional). [2] See Kinds Codes of USPTO Patent Documents at www.uspto.gov or MPEP 901.04. [3] Enter Office that issued the document, by the two-letter code (WIPO Standard ST.3). [4] For Japanese patent documents, the indication of the year of the reign of the Emperor must precede the serial number of the patent document. [5] Kind of document by the appropriate symbols as indicated on the document under WIPO Standard ST.16 if possible. [6] Applicant is to place a check mark here if English language Translation is attached.

This collection of information is required by 37 CFR 1.97 and 1.98. The information is required to obtain or retain a benefit by the public which is to file (and by the USPTO to process) an application. Confidentiality is governed by 35 U.S.C. 122 and 37 CFR 1.14. This collection is estimated to take 2 hours to complete, including gathering, preparing, and submitting the completed application form to the USPTO. Time will vary depending upon the individual case. Any comments on the amount of time you require to complete this form and/or suggestions for reducing this burden, should be sent to the Chief Information Officer, U.S. Patent and Trademark Office, P.O. Box 1450, Alexandria, VA 22313-1450. DO NOT SEND FEES OR COMPLETED FORMS TO THIS ADDRESS. **SEND TO: Commissioner for Patents, P.O. Box 1450, Alexandria, VA 22313-1450.**

If you need assistance in completing the form, call 1-800-PTO-9199 (1-800-786-9199) and select option 2.

UNITED STATES PATENT AND TRADEMARK OFFICE

UNITED STATES DEPARTMENT OF COMMERCE
United States Patent and Trademark Office
Address: COMMISSIONER FOR PATENTS
P.O. Box 1450
Alexandria, Virginia 22313-1450
www.uspto.gov

APPLICATION NO.	FILING DATE	FIRST NAMED INVENTOR	ATTORNEY DOCKET NO.	CONFIRMATION NO.
10/101,644	03/19/2002	Marc Vianello	15703.10002	8626

27128 7590 07/14/2008

HUSCH BLACKWELL SANDERS LLP
720 OLIVE STREET
SUITE 2400
ST. LOUIS, MO 63101

EXAMINER	
JEANTY, ROMAIN	
ART UNIT	PAPER NUMBER
3623	

NOTIFICATION DATE	DELIVERY MODE
07/14/2008	ELECTRONIC

Please find below and/or attached an Office communication concerning this application or proceeding.

The time period for reply, if any, is set in the attached communication.

Notice of the Office communication was sent electronically on above-indicated "Notification Date" to the following e-mail address(es):

pto-sl@huschblackwell.com

UNITED STATES DEPARTMENT OF COMMERCE
U.S. Patent and Trademark Office
Address: COMMISSIONER FOR PATENTS
P.O. Box 1450
Alexandria, Virginia 22313-1450

APPLICATION NO./ CONTROL NO.	FILING DATE	FIRST NAMED INVENTOR / PATENT IN REEXAMINATION	ATTORNEY DOCKET NO.
10101644	3/19/2002	VIANELLO, MARC	15703.10002

HUSCH BLACKWELL SANDERS LLP
720 OLIVE STREET
SUITE 2400
ST. LOUIS, MO 63101

EXAMINER	
ROMAIN JEANTY	
ART UNIT	**PAPER**
3623	20080605

DATE MAILED:

Please find below and/or attached an Office communication concerning this application or proceeding.

Commissioner for Patents

The Index of claim has been corrected.

Any inquiry concerning this communication or earlier communications from the examiner should be directed to Romain Jeanty whose telephone number is (571)272-6732. The examiner can normally be reached on Mon-Thurs 7:30 am to 6:00 pm. If attempts to reach the examiner by telephone are unsuccessful, the examiner's supervisor, Beth Van Doren can be reached on (571) 272-6737. The fax phone number for the organization where this application or proceeding is assigned is 571-273-8300. Information regarding the status of an application may be obtained from the Patent Application Information Retrieval (PAIR) system. Status information for published applications may be obtained from either Private PAIR or Public PAIR. Status information for unpublished applications is available through Private PAIR only. For more information about the PAIR system, see http://pair-direct.uspto.gov. Should you have questions on access to the Private PAIR system, contact the Electronic Business Center (EBC) at 866-217-9197 (toll-free). If you would like assistance from a USPTO Customer Service Representative or access to the automated information system, call 800-786-9199 (IN USA OR CANADA) or 571-272-1000.

/Romain Jeanty/
Primary Examiner, Art Unit 3623

PRINTER RUSH

(PTO ASSISTANCE)

2nd Query

Application :	10101644	**Examiner :**	Jeanty	**GAU :**	3623
From:	J. Black	**Location:**	(IDC) FMF FDC	**Date:**	5/14/08

Tracking #: epm10101644 Week Date: 1/21/08

DOC CODE	DOC DATE	MISCELLANEOUS
☐ 1449		☐ Continuing Data
☐ IDS		☐ Foreign Priority
☐ CLM		☐ Document Legibility
☑ IIFW/FWCLM	3/21/08	☐ Fees
☐ SRFW		☐ Other
☐ DRW		
☐ OATH		
☐ 312		
☐ SPEC		

[RUSH] **MESSAGE:**

Claim 4 is missing from final column of index of claims.

Please resolve

[XRUSH] **RESPONSE:** Claim 4 has been included in the index of claim.

6/4/2008

INITIALS: /RJ/

EXAMINER: PUBS contacts -- for DESIGNS: Don Fairchild, 703-308-9250 x126; for ALL OTHER FILES: Bernadette Queen, 703-308-9250 x121

NOTE: This form will be included as part of the official USPTO record, with the Response document coded as XRUSH.

REV May 07

Index of Claims

Application/Control No.	Applicant(s)/Patent under Reexamination
10/101,644	VIANELLO, MARC
Examiner	**Art Unit**
Romain Jeanty	3623

√	Rejected	–	(Through numeral) Cancelled	N	Non-Elected	A	Appeal
=	Allowed	÷	Restricted	I	Interference	O	Objected

Claim		Date								
Final	Original	6/4/08								
	1									
	2									
	3									
	4									
1	5	=								
	6									
2	7	=								
	8									
	9									
3	10	=								
	11									
	12									
	13									
9	14	=								
	15									
	16									
10	17	=								
	18									
	19									
	20									
	21									
	22									
	23									
	24									
	25									
	26									
	27									
	28									
	29									
	30									
	31									
	32									
	33									
	34									
	35									
	36									
	37									
	38									
	39									
	40									
	41									
	42									
	43									
	44									
	45									
	46									
	47									
	48									
	49									
	50									

Claim		Date								
Final	Original									
	51									
	52									
	53									
	54									
	55									
	56									
	57									
	58									
	59									
	60									
	61									
	62									
	63									
	64									
	65									
	66									
	67									
	68									
	69									
	70									
	71									
	72									
	73									
	74									
	75									
	76									
	77									
	78									
	79									
	80									
	81									
	82									
	83									
	84									
	85									
	86									
	87									
	88									
	89									
	90									
	91									
	92									
	93									
	94									
	95									
	96									
	97									
	98									
	99									
	100									

Claim		Date								
Final	Original									
	101									
	102									
	103									
	104									
	105									
	106									
	107									
	108									
	109									
	110									
	111									
	112									
	113									
	114									
	115									
	116									
	117									
	118									
	119									
	120									
	121									
	122									
	123									
	124									
	125									
	126									
	127									
	128									
	129									
	130									
	131									
	132									
	133									
	134									
	135									
	136									
	137									
	138									
	139									
	140									
	141									
	142									
	143									
	144									
	145									
	146									
	147									
	148									
	149									
	150									

Index of Claims (continued)

Application/Control No.	Applicant(s)/Patent under Reexamination
10/101,644	VIANELLO, MARC
Examiner	**Art Unit**
Romain Jeanty	3623

√	Rejected	–	(Through numeral) Cancelled	N	Non-Elected	A	Appeal
=	Allowed	÷	Restricted	I	Interference	O	Objected

Claim		Date								
Final	Original									
	151									
	152									
	153									
	154									
	155									
	156									
	157									
	158									
	159									
	160									
	161									
	162									
	163									
	164									
	165									
	166									
	167									
	168									
	169									
	170									
	171									
	172									
	173									
	174									
	175									
	176									
	177									
	178									
	179									
	180									
	181									
	182									
	183									
	184									
	185									
	186									
	187									
	188									
	189									
	190									
	191									
	192									
	193									
	194									
	195									
	196									
	197									
	198									
	199									
4	200	=								

Claim		Date								
Final	Original	6/4/08								
	201									
	202									
	203									
	204									
5	205	=								
6	206	=								
	207									
7	208	=								
12	209	=								
13	210	=								
14	211	=								
15	212	=								
16	213	=								
17	214	=								
18	215	=								
19	216	=								
20	217	=								
21	218	=								
22	219	=								
	220									
23	221	=								
25	222	=								
24	223	=								
11	224	=								
8	225	=								
	226									
	227									
	228									
	229									
	230									
	231									
	232									
	233									
	234									
	235									
	236									
	237									
	238									
	239									
	240									
	241									
	242									
	243									
	244									
	245									
	246									
	247									
	248									
	249									
	250									

Claim		Date								
Final	Original									
	251									
	252									
	253									
	254									
	255									
	256									
	257									
	258									
	259									
	260									
	261									
	262									
	263									
	264									
	265									
	266									
	267									
	268									
	269									
	270									
	271									
	272									
	273									
	274									
	275									
	276									
	277									
	278									
	279									
	280									
	281									
	282									
	283									
	284									
	285									
	286									
	287									
	288									
	289									
	290									
	291									
	292									
	293									
	294									
	295									
	296									
	297									
	298									
	299									
	300									

PART B - FEE(S) TRANSMITTAL

Complete and send this form, together with applicable fee(s), to: Mail Mail Stop ISSUE FEE
Commissioner for Patents
P.O. Box 1450
Alexandria, Virginia 22313-1450
or Fax (571)-273-2885

INSTRUCTIONS: This form should be used for transmitting the ISSUE FEE and PUBLICATION FEE (if required). Blocks 1 through 5 should be completed where appropriate. All further correspondence including the Patent, advance orders and notification of maintenance fees will be mailed to the current correspondence address as indicated unless corrected below or directed otherwise in Block 1, by (a) specifying a new correspondence address; and/or (b) indicating a separate "FEE ADDRESS" for maintenance fee notifications.

CURRENT CORRESPONDENCE ADDRESS (Note: Use Block 1 for any change of address)

27128 7590 01/16/2008

BLACKWELL SANDERS LLP
720 OLIVE STREET
SUITE 2400
ST. LOUIS, MO 63101

Note: A certificate of mailing can only be used for domestic mailings of the Fee(s) Transmittal. This certificate cannot be used for any other accompanying papers. Each additional paper, such as an assignment or formal drawing, must have its own certificate of mailing or transmission.

Certificate of Mailing or Transmission
I hereby certify that this Fee(s) Transmittal is being deposited with the United States Postal Service with sufficient postage for first class mail in an envelope addressed to the Mail Stop ISSUE FEE address above, or being facsimile transmitted to the USPTO (571) 273-2885, on the date indicated below.

Susan Murphy	(Depositor's name)
Susan Murphy	(Signature)
April 4, 2008	(Date)

APPLICATION NO.	FILING DATE	FIRST NAMED INVENTOR	ATTORNEY DOCKET NO.	CONFIRMATION NO.
10/101,644	03/19/2002	Marc Vianello	15703.10002	8626

TITLE OF INVENTION: APPARATUS AND METHODS FOR PROVIDING CAREER AND EMPLOYMENT SERVICES

APPLN. TYPE	SMALL ENTITY	ISSUE FEE DUE	PUBLICATION FEE DUE	PREV. PAID ISSUE FEE	TOTAL FEE(S) DUE	DATE DUE
nonprovisional	YES	$720	$300	$0	$1020	04/16/2008

EXAMINER	ART UNIT	CLASS-SUBCLASS
JEANTY, ROMAIN	3623	705-009000

1. Change of correspondence address or indication of "Fee Address" (37 CFR 1.363).
☐ Change of correspondence address (or Change of Correspondence Address form PTO/SB/122) attached.
☐ "Fee Address" indication (or "Fee Address" Indication form PTO/SB/47; Rev 03-02 or more recent) attached. **Use of a Customer Number is required.**

2. For printing on the patent front page, list
(1) the names of up to 3 registered patent attorneys or agents OR, alternatively,
(2) the name of a single firm (having as a member a registered attorney or agent) and the names of up to 2 registered patent attorneys or agents. If no name is listed, no name will be printed.
1 Husch Blackwell Sanders LLP
2
3

3. ASSIGNEE NAME AND RESIDENCE DATA TO BE PRINTED ON THE PATENT (print or type)

PLEASE NOTE: Unless an assignee is identified below, no assignee data will appear on the patent. If an assignee is identified below, the document has been filed for recordation as set forth in 37 CFR 3.11. Completion of this form is NOT a substitute for filing an assignment.

(A) NAME OF ASSIGNEE (B) RESIDENCE: (CITY and STATE OR COUNTRY)

Please check the appropriate assignee category or categories (will not be printed on the patent) : ☐ Individual ☐ Corporation or other private group entity ☐ Government

4a. The following fee(s) are submitted:
☑ Issue Fee
☑ Publication Fee (No small entity discount permitted)
☐ Advance Order - # of Copies

4b. Payment of Fee(s): **(Please first reapply any previously paid issue fee shown above)**
☐ A check is enclosed.
☐ Payment by credit card. Form PTO-2038 is attached.
☑ The Director is hereby authorized to charge the required fee(s), any deficiency, or credit any overpayment, to Deposit Account Number 11-0160 (enclose an extra copy of this form).

5. **Change in Entity Status** (from status indicated above)
☐ a. Applicant claims SMALL ENTITY status. See 37 CFR 1.27.
☐ b. Applicant is no longer claiming SMALL ENTITY status. See 37 CFR 1.27(g)(2).

NOTE: The Issue Fee and Publication Fee (if required) will not be accepted from anyone other than the applicant; a registered attorney or agent; or the assignee or other party in interest as shown by the records of the United States Patent and Trademark Office.

Authorized Signature _____ Date April 4, 2008

Typed or printed name Samuel Digirolamo Registration No. 29,915

This collection of information is required by 37 CFR 1.311. The information is required to obtain or retain a benefit by the public which is to file (and by the USPTO to process) an application. Confidentiality is governed by 35 U.S.C. 122 and 37 CFR 1.14. This collection is estimated to take 12 minutes to complete, including gathering, preparing, and submitting the completed application form to the USPTO. Time will vary depending upon the individual case. Any comments on the amount of time you require to complete this form and/or suggestions for reducing this burden, should be sent to the Chief Information Officer, U.S. Patent and Trademark Office, U.S. Department of Commerce, P.O. Box 1450, Alexandria, Virginia 22313-1450. DO NOT SEND FEES OR COMPLETED FORMS TO THIS ADDRESS. SEND TO: Commissioner for Patents, P.O. Box 1450, Alexandria, Virginia 22313-1450.

Under the Paperwork Reduction Act of 1995, no persons are required to respond to a collection of information unless it displays a valid OMB control number.

Electronic Patent Application Fee Transmittal

Application Number:	10101644
Filing Date:	19-Mar-2002
Title of Invention:	APPARATUS AND METHODS FOR PROVIDING CAREER AND EMPLOYMENT SERVICES
First Named Inventor/Applicant Name:	Marc Vianello
Filer:	Samuel Digirolamo/Susan Murphy
Attorney Docket Number:	15703.10002

Filed as Small Entity

Utility Filing Fees

Description	Fee Code	Quantity	Amount	Sub-Total in USD($)
Basic Filing:				
Pages:				
Claims:				
Miscellaneous-Filing:				
Petition:				
Patent-Appeals-and-Interference:				
Post-Allowance-and-Post-Issuance:				
Utility Appl issue fee	2501	1	720	720
Publ. Fee- early, voluntary, or normal	1504	1	300	300

Description	Fee Code	Quantity	Amount	Sub-Total in USD($)
Extension-of-Time:				
Miscellaneous:				
			Total in USD ($)	**1020**

Electronic Acknowledgement Receipt

EFS ID:	3107812
Application Number:	10101644
International Application Number:	
Confirmation Number:	8626
Title of Invention:	APPARATUS AND METHODS FOR PROVIDING CAREER AND EMPLOYMENT SERVICES
First Named Inventor/Applicant Name:	Marc Vianello
Customer Number:	27128
Filer:	Samuel Digirolamo/Susan Murphy
Filer Authorized By:	Samuel Digirolamo
Attorney Docket Number:	15703.10002
Receipt Date:	04-APR-2008
Filing Date:	19-MAR-2002
Time Stamp:	17:00:53
Application Type:	Utility under 35 USC 111(a)

Payment information:

Submitted with Payment	yes
Payment Type	Deposit Account
Payment was successfully received in RAM	$1020
RAM confirmation Number	2191
Deposit Account	110160
Authorized User	

The Director of the USPTO is hereby authorized to charge indicated fees and credit any overpayment as follows:

Charge any Additional Fees required under 37 C.F.R. Section 1.16 (National application filing, search, and examination fees)

Charge any Additional Fees required under 37 C.F.R. Section 1.17 (Patent application and reexamination processing fees)

Charge any Additional Fees required under 37 C.F.R. Section 1.19 (Document supply fees)

Charge any Additional Fees required under 37 C.F.R. Section 1.20 (Post Issuance fees)

Charge any Additional Fees required under 37 C.F.R. Section 1.21 (Miscellaneous fees and charges)

File Listing:

Document Number	Document Description	File Name	File Size(Bytes) /Message Digest	Multi Part /.zip	Pages (if appl.)
1	Issue Fee Payment (PTO-85B)	ExecutedIssueFee.pdf	151553 28d33f10b833179b159ada30c6b9fe4eabee61eb	no	1
Warnings:					
Information:					
2	Fee Worksheet (PTO-06)	fee-info.pdf	8313 58b91289b0cf148d4bbcd3d23c076d8992845e76	no	2
Warnings:					
Information:					
		Total Files Size (in bytes):	159866		

This Acknowledgement Receipt evidences receipt on the noted date by the USPTO of the indicated documents, characterized by the applicant, and including page counts, where applicable. It serves as evidence of receipt similar to a Post Card, as described in MPEP 503.

New Applications Under 35 U.S.C. 111
If a new application is being filed and the application includes the necessary components for a filing date (see 37 CFR 1.53(b)-(d) and MPEP 506), a Filing Receipt (37 CFR 1.54) will be issued in due course and the date shown on this Acknowledgement Receipt will establish the filing date of the application.

National Stage of an International Application under 35 U.S.C. 371
If a timely submission to enter the national stage of an international application is compliant with the conditions of 35 U.S.C. 371 and other applicable requirements a Form PCT/DO/EO/903 indicating acceptance of the application as a national stage submission under 35 U.S.C. 371 will be issued in addition to the Filing Receipt, in due course.

New International Application Filed with the USPTO as a Receiving Office
If a new international application is being filed and the international application includes the necessary components for an international filing date (see PCT Article 11 and MPEP 1810), a Notification of the International Application Number and of the International Filing Date (Form PCT/RO/105) will be issued in due course, subject to prescriptions concerning national security, and the date shown on this Acknowledgement Receipt will establish the international filing date of the application.

UNITED STATES PATENT AND TRADEMARK OFFICE

UNITED STATES DEPARTMENT OF COMMERCE
United States Patent and Trademark Office
Address: COMMISSIONER FOR PATENTS
P.O. Box 1450
Alexandria, Virginia 22313-1450
www.uspto.gov

APPLICATION NO.	FILING DATE	FIRST NAMED INVENTOR	ATTORNEY DOCKET NO.	CONFIRMATION NO.
10/101,644	03/19/2002	Marc Vianello	15703.10002	8626

27128 7590 03/21/2008

HUSCH BLACKWELL SANDERS LLP
720 OLIVE STREET
SUITE 2400
ST. LOUIS, MO 63101

EXAMINER	
JEANTY, ROMAIN	
ART UNIT	**PAPER NUMBER**
3623	
MAIL DATE	**DELIVERY MODE**
03/21/2008	PAPER

Please find below and/or attached an Office communication concerning this application or proceeding.

The time period for reply, if any, is set in the attached communication.

Notice of Allowability	Application No.	Applicant(s)	
	10/101,644	VIANELLO, MARC	
	Examiner	Art Unit	
	Romain Jeanty	3623	

-- The MAILING DATE of this communication appears on the cover sheet with the correspondence address--

All claims being allowable, PROSECUTION ON THE MERITS IS (OR REMAINS) CLOSED in this application. If not included herewith (or previously mailed), a Notice of Allowance (PTOL-85) or other appropriate communication will be mailed in due course. **THIS NOTICE OF ALLOWABILITY IS NOT A GRANT OF PATENT RIGHTS.** This application is subject to withdrawal from issue at the initiative of the Office or upon petition by the applicant. See 37 CFR 1.313 and MPEP 1308.

1. ☒ This communication is responsive to *November 14, 2007*.

2. ☒ The allowed claim(s) is/are *5-6, 10, 14, 17, 200, 204-205 and 208-219, and 221-225*.

3. ☐ Acknowledgment is made of a claim for foreign priority under 35 U.S.C. § 119(a)-(d) or (f).
   a) ☐ All b) ☐ Some* c) ☐ None of the:
      1. ☐ Certified copies of the priority documents have been received.
      2. ☐ Certified copies of the priority documents have been received in Application No. _____ .
      3. ☐ Copies of the certified copies of the priority documents have been received in this national stage application from the International Bureau (PCT Rule 17.2(a)).

   * Certified copies not received: _____.

Applicant has THREE MONTHS FROM THE "MAILING DATE" of this communication to file a reply complying with the requirements noted below. Failure to timely comply will result in ABANDONMENT of this application.
THIS THREE-MONTH PERIOD IS NOT EXTENDABLE.

4. ☐ A SUBSTITUTE OATH OR DECLARATION must be submitted. Note the attached EXAMINER'S AMENDMENT or NOTICE OF INFORMAL PATENT APPLICATION (PTO-152) which gives reason(s) why the oath or declaration is deficient.

5. ☐ CORRECTED DRAWINGS (as "replacement sheets") must be submitted.
   (a) ☐ including changes required by the Notice of Draftsperson's Patent Drawing Review (PTO-948) attached
      1) ☐ hereto or 2) ☐ to Paper No./Mail Date _____.
   (b) ☐ including changes required by the attached Examiner's Amendment / Comment or in the Office action of Paper No./Mail Date _____.

   Identifying indicia such as the application number (see 37 CFR 1.84(c)) should be written on the drawings in the front (not the back) of each sheet. Replacement sheet(s) should be labeled as such in the header according to 37 CFR 1.121(d).

6. ☐ DEPOSIT OF and/or INFORMATION about the deposit of BIOLOGICAL MATERIAL must be submitted. Note the attached Examiner's comment regarding REQUIREMENT FOR THE DEPOSIT OF BIOLOGICAL MATERIAL.

Attachment(s)

1. ☐ Notice of References Cited (PTO-892)
2. ☐ Notice of Draftperson's Patent Drawing Review (PTO-948)
3. ☒ Information Disclosure Statements (PTO/SB/08), Paper No./Mail Date 4/28/04
4. ☐ Examiner's Comment Regarding Requirement for Deposit of Biological Material
5. ☐ Notice of Informal Patent Application
6. ☐ Interview Summary (PTO-413), Paper No./Mail Date _____ .
7. ☐ Examiner's Amendment/Comment
8. ☐ Examiner's Statement of Reasons for Allowance
9. ☐ Other _____.

/Romain Jeanty/
Primary Examiner, Art Unit 3623

Information Disclosure Statement

1. The information disclosure statement (IDS) submitted on April 28, 2004, is being considered by the examiner. The submission is in compliance with the provisions of 37 CFR 1.97.

Any inquiry concerning this communication or earlier communications from the examiner should be directed to Romain Jeanty whose telephone number is (571) 272-6732. The examiner can normally be reached on Mon-Thurs 7:30 am to 6:00 pm.

If attempts to reach the examiner by telephone are unsuccessful, the examiner's supervisor, Tariq R. Hafiz can be reached on (571) 272-6729. The fax phone number for the organization where this application or proceeding is assigned is 571-273-8300.

Information regarding the status of an application may be obtained from the Patent Application Information Retrieval (PAIR) system. Status information for published applications may be obtained from either Private PAIR or Public PAIR. Status information for unpublished applications is available through Private PAIR only. For more information about the PAIR system, see http://pair-direct.uspto.gov. Should you have questions on access to the Private PAIR system, contact the Electronic Business Center (EBC) at 866-217-9197 (toll-free). If you would like assistance from a USPTO Customer Service Representative or access to the automated information system, call 800-786-9199 (IN USA OR CANADA) or 571-272-1000.

/Romain Jeanty/
Primary Examiner, Art Unit 3623
March 15, 2008

Issue Classification	Application/Control No.	Applicant(s)/Patent under Reexamination	
	10/101,644	VIANELLO, MARC	
	Examiner	Art Unit	
	Romain Jeanty	3623	

ISSUE CLASSIFICATION

ORIGINAL			CROSS REFERENCE(S)							
CLASS	SUBCLASS	CLASS	SUBCLASS (ONE SUBCLASS PER BLOCK)							
INTERNATIONAL CLASSIFICATION										
/										
/										
/										
/										
/										

(Assistant Examiner) (Date)		Total Claims Allowed:	
(Legal Instruments Examiner) (Date)	(Primary Examiner) (Date)	O.G. Print Claim(s)	O.G. Print Fig.

☐ Claims renumbered in the same order as presented by applicant ☐ CPA ☐ T.D. ☐ R.1.47

Final	Original	Final	Original	Final	Original	Final	Original	Final	Original	Final	Original	Final	Original
	211		241		271		301		331		361		391
	212		242		272		302		332		362		392
	213		243		273		303		333		363		393
	214		244		274		304		334		364		394
	215		245		275		305		335		365		395
	216		246		276		306		336		366		396
	217		247		277		307		337		367		397
	218		248		278		308		338		368		398
	219		249		279		309		339		369		399
	220		250		280		310		340		370		400
	221		251		281		311		341		371		401
	222		252		282		312		342		372		402
	223		253		283		313		343		373		403
	224		254		284		314		344		374		404
	225		255		285		315		345		375		405
	226		256		286		316		346		376		406
	227		257		287		317		347		377		407
	228		258		288		318		348		378		408
	229		259		289		319		349		379		409
	230		260		290		320		350		380		410
	231		261		291		321		351		381		411
	232		262		292		322		352		382		412
	233		263		293		323		353		383		413
	234		264		294		324		354		384		414
	235		265		295		325		355		385		415
	236		266		296		326		356		386		416
	237		267		297		327		357		387		417
	238		268		298		328		358		388		418
	239		269		299		329		359		389		419
	240		270		300		330		360		390		420

Monster Worldwide, Inc. Exhibit 1010 (p.21/1328)

Index of Claims (continued)

Application/Control No.	Applicant(s)/Patent under Reexamination
10/101,644	VIANELLO, MARC
Examiner	**Art Unit**
Romain Jeanty	3623

√	Rejected	–	(Through numeral) Cancelled	N	Non-Elected	A	Appeal
=	Allowed	÷	Restricted	I	Interference	O	Objected

Claim		Date								
Final	Original									
	151									
	152									
	153									
	154									
	155									
	156									
	157									
	158									
	159									
	160									
	161									
	162									
	163									
	164									
	165									
	166									
	167									
	168									
	169									
	170									
	171									
	172									
	173									
	174									
	175									
	176									
	177									
	178									
	179									
	180									
	181									
	182									
	183									
	184									
	185									
	186									
	187									
	188									
	189									
	190									
	191									
	192									
	193									
	194									
	195									
	196									
	197									
	198									
	199									
	200									

Claim		Date								
Final	Original	3/15/08								
	201									
	202									
	203									
	204									
5	205	=								
6	206	=								
	207									
7	208	=								
12	209	=								
13	210	=								
14	211	=								
15	212	=								
16	213	=								
17	214	=								
18	215	=								
19	216	=								
20	217	=								
21	218	=								
22	219	=								
	220									
23	221	=								
25	222	=								
24	223	=								
11	224	=								
8	225	=								
	226									
	227									
	228									
	229									
	230									
	231									
	232									
	233									
	234									
	235									
	236									
	237									
	238									
	239									
	240									
	241									
	242									
	243									
	244									
	245									
	246									
	247									
	248									
	249									
	250									

Claim		Date								
Final	Original									
	251									
	252									
	253									
	254									
	255									
	256									
	257									
	258									
	259									
	260									
	261									
	262									
	263									
	264									
	265									
	266									
	267									
	268									
	269									
	270									
	271									
	272									
	273									
	274									
	275									
	276									
	277									
	278									
	279									
	280									
	281									
	282									
	283									
	284									
	285									
	286									
	287									
	288									
	289									
	290									
	291									
	292									
	293									
	294									
	295									
	296									
	297									
	298									
	299									
	300									

PRINTER RUSH

(PTO ASSISTANCE)

Application :	10101644	**Examiner :**	Jeanty	**GAU :**	3623
From:	J. Black	**Location:**	(IDC) FMF FDC	**Date:**	2/19/08

Tracking #: epIDS10644 Week Date: 1/21/08

DOC CODE	DOC DATE	MISCELLANEOUS
☐ 1449		☐ Continuing Data
☒ IDS	4/28/04	☐ Foreign Priority
☐ CLM		☐ Document Legibility
☐ IIFW/FWCLM		☐ Fees
☐ SRFW		☐ Other
☐ DRW		
☐ OATH		
☐ 312		
☐ SPEC		

[RUSH] **MESSAGE:**

(1) Please initial/line through citation (6524109 is not a duplicate).

(2) Claim 6 is allowed in claims, but not allowed on FWClm.

(3) Claim 7 is canceled in claims but allowed on FWClm

(4) IDS index of claims is incomplete.

[XRUSH] **RESPONSE:** The IDS has been initialed. The index of claims 6 and 7 has been fixed.

03/14/08

INITIALS: /RJ/

EXAMINER: PUBS contacts -- for DESIGNS: Don Fairchild, 703-308-9250 x126; for ALL OTHER FILES: Bernadette Queen, 703-308-9250 x121

NOTE: This form will be included as part of the official USPTO record, with the Response document coded as XRUSH.

Monster Worldwide, Inc. Exhibit 1010 (p.23/1328)

Index of Claims

Application/Control No.	Applicant(s)/Patent under Reexamination
10/101,644	VIANELLO, MARC
Examiner	**Art Unit**
Romain Jeanty	3623

√	Rejected	–	(Through numeral) Cancelled	N	Non-Elected	A	Appeal
=	Allowed	÷	Restricted	I	Interference	O	Objected

Claim		Date
Final	Original	3/15/08
	1	
	2	
	3	
	4	
1	5	=
2	6	=
	7	
	8	
	9	
3	10	=
	11	
	12	
	13	
9	14	=
	15	
	16	
10	17	=
	18	
	19	
	20	
	21	
	22	
	23	
	24	
	25	
	26	
	27	
	28	
	29	
	30	
	31	
	32	
	33	
	34	
	35	
	36	
	37	
	38	
	39	
	40	
	41	
	42	
	43	
	44	
	45	
	46	
	47	
	48	
	49	
	50	

Claim		Date
Final	Original	
	51	
	52	
	53	
	54	
	55	
	56	
	57	
	58	
	59	
	60	
	61	
	62	
	63	
	64	
	65	
	66	
	67	
	68	
	69	
	70	
	71	
	72	
	73	
	74	
	75	
	76	
	77	
	78	
	79	
	80	
	81	
	82	
	83	
	84	
	85	
	86	
	87	
	88	
	89	
	90	
	91	
	92	
	93	
	94	
	95	
	96	
	97	
	98	
	99	
	100	

Claim		Date
Final	Original	
	101	
	102	
	103	
	104	
	105	
	106	
	107	
	108	
	109	
	110	
	111	
	112	
	113	
	114	
	115	
	116	
	117	
	118	
	119	
	120	
	121	
	122	
	123	
	124	
	125	
	126	
	127	
	128	
	129	
	130	
	131	
	132	
	133	
	134	
	135	
	136	
	137	
	138	
	139	
	140	
	141	
	142	
	143	
	144	
	145	
	146	
	147	
	148	
	149	
	150	

ALL REFERENCES CONSIDERED EXCEPT WHERE LINED THROUGH. /RJ/ (03/18/2008)

PATENT

IN THE UNITED STATES PATENT AND TRADEMARK OFFICE

Application of:	)	Docket No.: 15703-10002
Marc VIANELLO	)	Confirmation No. 8626
Serial No.: 10/101,644	)	Group Art Unit: 3623
Filed: March 19, 2002	)	Examiner: Romain Jeanty
APPARATUS AND METHODS FOR PROVIDING CAREER AND EMPLOYMENT SERVICES	)	

RECEIVED
MAY 0 4 2004
GROUP 3600

Commissioner of Patents
P.O. Box 1450
Alexandria, VA 22313-1450

EXPRESS MAIL

SUPPLEMENTAL INFORMATION DISCLOSURE STATEMENT

The undersigned attorney hereby certifies that each item of information contained in the attached Information Disclosure Statement was first cited in a communication from a foreign patent office in a counterpart foreign application not more than three months prior to the filing of this Information Disclosure Statement. Applicant submits herewith patents of which he is aware, which he believes may be material to the examination of this application, and in respect of which there may be a duty to disclose in accordance with 37 C.F.R. 1.56.

The filing of this Information Disclosure Statement shall not be construed as a representation that a search has been made (37 C.F.R. 1.56(g)), an admission that the information cited is, or is considered to be, material to patentability or that no other material information exists.

The filing of this Information Disclosure Statement shall not be construed as an admission against interest in any manner. Notice of January 9, 1992, 1135 O.G. 13-25, at 25.

It is believed there are no fees due in connection with the filing of this document. However, if any fees are due, the Office is authorized to charge same to Deposit Account No. 11-0160.

Respectfully submitted,

4/28/2004
Date

Ladi O. Shogbamimu, Reg. No. 46,291
BLACKWELL SANDERS PEPER MARTIN LLP
2300 Main Street, Suite 1000
Kansas City, MO 64108
(816) 983-8000

ATTORNEYS FOR APPLICANT

OIPE
APR 2 8 2004
PATENT & TRADEMARK OFFICE
JC101

04-29-04. 3623

PTO/SB/21 (02-04)
Approved for use through 07/31/2006. OMB 0651-0031
U.S. Patent and Trademark Office; U.S. DEPARTMENT OF COMMERCE
Under the Paperwork Reduction Act of 1995, no persons are required to respond to a collection of information unless it displays a valid OMB control number.

TRANSMITTAL FORM

(to be used for all correspondence after initial filing)

Application Number	10/101,644
Filing Date	March 19, 2002
First Named Inventor	Marc Vianello
Art Unit	3623
Examiner Name	Romain Jeanty
Total Number of Pages in This Submission: 115	Attorney Docket Number: 15703-10002

ENCLOSURES *(Check all that apply)*

- ☐ Fee Transmittal Form
  - ☐ Fee Attached
- ☐ Amendment/Reply
  - ☐ After Final
  - ☐ Affidavits/declaration(s)
- ☐ Extension of Time Request
- ☐ Express Abandonment Request
- ☑ Supplemental Information Disclosure Statement
- ☐ Certified Copy of Priority Document(s)
- ☐ Response to Missing Parts/ Incomplete Application
  - ☐ Response to Missing Parts under 37 CFR 1.52 or 1.53
- ☐ Drawing(s)
- ☐ Licensing-related Papers
- ☐ Petition
- ☐ Petition to Convert to a Provisional Application
- ☐ Power of Attorney, Revocation Change of Correspondence Address
- ☐ Terminal Disclaimer
- ☐ Request for Refund
- ☐ CD, Number of CD(s) _____
- ☐ After Allowance communication to Technology Center (TC)
- ☐ Appeal Communication to Board of Appeals and Interferences
- ☐ Appeal Communication to TC **(Appeal Notice, Brief, Reply Brief)**
- ☐ Proprietary Information
- ☐ Status Letter
- ☐ Other Enclosure(s) (please Identify below):

Remarks

RECEIVED
MAY 0 4 2004
GROUP 3600

SIGNATURE OF APPLICANT, ATTORNEY, OR AGENT

Firm or Individual name	Ladi O. Shogbamimu Blackwell Sanders Peper Martin LLP
Signature	
Date	April 28, 2004

CERTIFICATE OF TRANSMISSION/MAILING

I hereby certify that this correspondence is being facsimile transmitted to the USPTO or deposited with the United States Postal Service with sufficient postage as first class mail in an envelope addressed to: Commissioner for Patents, P.O. Box 1450, Alexandria, VA 22313-1450 on the date shown below.

Typed or printed name	Barbara J. Parkerson		
Signature	Barbara J. Parkerson	Date	April 28, 2004

This collection of information is required by 37 CFR 1.5. The information is required to obtain or retain a benefit by the public which is to file (and by the USPTO to process) an application. Confidentiality is governed by 35 U.S.C. 122 and 37 CFR 1.14. This collection is estimated to 2 hours to complete, including gathering, preparing, and submitting the completed application form to the USPTO. Time will vary depending upon the individual case. Any comments on the amount of time you require to complete this form and/or suggestions for reducing this burden, should be sent to the Chief Information Officer, U.S. Patent and Trademark Office, U.S. Department of Commerce, P.O. Box 1450, Alexandria, VA 22313-1450. DO NOT SEND FEES OR COMPLETED FORMS TO THIS ADDRESS. **SEND TO: Commissioner for Patents, P.O. Box 1450, Alexandria, VA 22313-1450.**

If you need assistance in completing the form, call 1-800-PTO-9199 and select option 2.

OIPE JC161
APR 2 8 2004
PATENT & TRADEMARK OFFICE

PTO/SB/08A (08-03)
Approved for use through 07/31/2006. OMB 0651-0031
U.S. Patent and Trademark Office; U.S. DEPARTMENT OF COMMERCE

Under the Paperwork Reduction Act of 1995, no persons are required to respond to a collection of information unless it contains a valid OMB control number.

Substitute for form 1449/PTO

INFORMATION DISCLOSURE STATEMENT BY APPLICANT

(Use as many sheets as necessary)

Sheet 1 of 1

Complete if Known	
Application Number	10/101,644
Filing Date	March 19, 2002
First Named Inventor	Marc Vianello
Art Unit	3623
Examiner Name	Romain Jeanty
Attorney Docket Number	15703-10002

U. S. PATENT DOCUMENTS

Examiner Initials*	Cite No.[1]	Document Number Number-Kind Code[2] (if known)	Publication Date MM-DD-YYYY	Name of Patentee or Applicant of Cited Document	Pages, Columns, Lines, Where Relevant Passages or Relevant Figures Appear
/RJ/		US- 5,978,768	11/02/99	Salmon et al	
/RJ/		US- 6,385,620	05/07/02	Kurzius et al	
/RJ/		US- 6,524,109	02/25/03	Lacy et al	
		US-			
		US-			
		US-			
		US-			
		US-			
		US-			
		US-			
		US-			
		US-			
		US-			
		US-			
		US-			
		US-			
		US-			
		US-			

RECEIVED
MAY 0 4 2004
GROUP 3600

FOREIGN PATENT DOCUMENTS

Examiner Initials*	Cite No.[1]	Foreign Patent Document Country Code[3]-Number[4]-Kind Code[5] (if known)	Publication Date MM-DD-YYYY	Name of Patentee or Applicant of Cited Document	Pages, Columns, Lines, Where Relevant Passages Or Relevant Figures Appear	T[6]

Examiner Signature	/Romain Jeanty/ (03/15/2008)	Date Considered	

*EXAMINER: Initial if reference considered, whether or not citation is in conformance with MPEP 609. Draw line through citation if not in conformance and not considered. Include copy of this form with next communication to applicant. [1] Applicant's unique citation designation number (optional). [2] See Kinds Codes of USPTO Patent Documents at www.uspto.gov or MPEP 901.04. [3] Enter Office that issued the document, by the two-letter code (WIPO Standard ST.3). [4] For Japanese patent documents, the indication of the year of the reign of the Emperor must precede the serial number of the patent document. [5] Kind of document by the appropriate symbols as indicated on the document under WIPO Standard ST.16 if possible. [6] Applicant is to place a check mark here if English language Translation is attached.

This collection of information is required by 37 CFR 1.97 and 1.98. The information is required to obtain or retain a benefit by the public which is to file (and by the USPTO to process) an application. Confidentiality is governed by 35 U.S.C. 122 and 37 CFR 1.14. This collection is estimated to take 2 hours to complete, including gathering, preparing, and submitting the completed application form to the USPTO. Time will vary depending upon the individual case. Any comments on the amount of time you require to complete this form and/or suggestions for reducing this burden, should be sent to the Chief Information Officer, U.S. Patent and Trademark Office, P.O. Box 1450, Alexandria, VA 22313-1450. DO NOT SEND FEES OR COMPLETED FORMS TO THIS ADDRESS. **SEND TO: Commissioner for Patents, P.O. Box 1450, Alexandria, VA 22313-1450.**

If you need assistance in completing the form, call 1-800-PTO-9199 (1-800-786-9199) and select option 2.

UNITED STATES PATENT AND TRADEMARK OFFICE

UNITED STATES DEPARTMENT OF COMMERCE
United States Patent and Trademark Office
Address: COMMISSIONER FOR PATENTS
P.O. Box 1450
Alexandria, Virginia 22313-1450
www.uspto.gov

NOTICE OF ALLOWANCE AND FEE(S) DUE

27128 7590 01/16/2008

BLACKWELL SANDERS LLP
720 OLIVE STREET
SUITE 2400
ST. LOUIS, MO 63101

EXAMINER	
JEANTY, ROMAIN	
ART UNIT	PAPER NUMBER
3623	

DATE MAILED: 01/16/2008

APPLICATION NO.	FILING DATE	FIRST NAMED INVENTOR	ATTORNEY DOCKET NO.	CONFIRMATION NO.
10/101,644	03/19/2002	Marc Vianello	15703.10002	8626

TITLE OF INVENTION: APPARATUS AND METHODS FOR PROVIDING CAREER AND EMPLOYMENT SERVICES

APPLN. TYPE	SMALL ENTITY	ISSUE FEE DUE	PUBLICATION FEE DUE	PREV. PAID ISSUE FEE	TOTAL FEE(S) DUE	DATE DUE
nonprovisional	YES	$720	$300	$0	$1020	04/16/2008

THE APPLICATION IDENTIFIED ABOVE HAS BEEN EXAMINED AND IS ALLOWED FOR ISSUANCE AS A PATENT. PROSECUTION ON THE MERITS IS CLOSED. THIS NOTICE OF ALLOWANCE IS NOT A GRANT OF PATENT RIGHTS. THIS APPLICATION IS SUBJECT TO WITHDRAWAL FROM ISSUE AT THE INITIATIVE OF THE OFFICE OR UPON PETITION BY THE APPLICANT. SEE 37 CFR 1.313 AND MPEP 1308.

THE ISSUE FEE AND PUBLICATION FEE (IF REQUIRED) MUST BE PAID WITHIN THREE MONTHS FROM THE MAILING DATE OF THIS NOTICE OR THIS APPLICATION SHALL BE REGARDED AS ABANDONED. THIS STATUTORY PERIOD CANNOT BE EXTENDED. SEE 35 U.S.C. 151. THE ISSUE FEE DUE INDICATED ABOVE DOES NOT REFLECT A CREDIT FOR ANY PREVIOUSLY PAID ISSUE FEE IN THIS APPLICATION. IF AN ISSUE FEE HAS PREVIOUSLY BEEN PAID IN THIS APPLICATION (AS SHOWN ABOVE), THE RETURN OF PART B OF THIS FORM WILL BE CONSIDERED A REQUEST TO REAPPLY THE PREVIOUSLY PAID ISSUE FEE TOWARD THE ISSUE FEE NOW DUE.

HOW TO REPLY TO THIS NOTICE:

I. Review the SMALL ENTITY status shown above.

If the SMALL ENTITY is shown as YES, verify your current SMALL ENTITY status:

A. If the status is the same, pay the TOTAL FEE(S) DUE shown above.

B. If the status above is to be removed, check box 5b on Part B - Fee(s) Transmittal and pay the PUBLICATION FEE (if required) and twice the amount of the ISSUE FEE shown above, or

If the SMALL ENTITY is shown as NO:

A. Pay TOTAL FEE(S) DUE shown above, or

B. If applicant claimed SMALL ENTITY status before, or is now claiming SMALL ENTITY status, check box 5a on Part B - Fee(s) Transmittal and pay the PUBLICATION FEE (if required) and 1/2 the ISSUE FEE shown above.

II. PART B - FEE(S) TRANSMITTAL, or its equivalent, must be completed and returned to the United States Patent and Trademark Office (USPTO) with your ISSUE FEE and PUBLICATION FEE (if required). If you are charging the fee(s) to your deposit account, section "4b" of Part B - Fee(s) Transmittal should be completed and an extra copy of the form should be submitted. If an equivalent of Part B is filed, a request to reapply a previously paid issue fee must be clearly made, and delays in processing may occur due to the difficulty in recognizing the paper as an equivalent of Part B.

III. All communications regarding this application must give the application number. Please direct all communications prior to issuance to Mail Stop ISSUE FEE unless advised to the contrary.

IMPORTANT REMINDER: Utility patents issuing on applications filed on or after Dec. 12, 1980 may require payment of maintenance fees. It is patentee's responsibility to ensure timely payment of maintenance fees when due.

Monster Worldwide, Inc. Exhibit 1010 (p.29/1328)

PART B - FEE(S) TRANSMITTAL

. Complete and send this form, together with applicable fee(s), to: Mail **Mail Stop ISSUE FEE**
Commissioner for Patents
P.O. Box 1450
Alexandria, Virginia 22313-1450
or Fax (571)-273-2885

INSTRUCTIONS: This form should be used for transmitting the ISSUE FEE and PUBLICATION FEE (if required). Blocks 1 through 5 should be completed where appropriate. All further correspondence including the Patent, advance orders and notification of maintenance fees will be mailed to the current correspondence address as indicated unless corrected below or directed otherwise in Block 1, by (a) specifying a new correspondence address; and/or (b) indicating a separate "FEE ADDRESS" for maintenance fee notifications.

CURRENT CORRESPONDENCE ADDRESS (Note: Use Block 1 for any change of address)

27128 7590 01/16/2008

BLACKWELL SANDERS LLP
720 OLIVE STREET
SUITE 2400
ST. LOUIS, MO 63101

Note: A certificate of mailing can only be used for domestic mailings of the Fee(s) Transmittal. This certificate cannot be used for any other accompanying papers. Each additional paper, such as an assignment or formal drawing, must have its own certificate of mailing or transmission.

Certificate of Mailing or Transmission
I hereby certify that this Fee(s) Transmittal is being deposited with the United States Postal Service with sufficient postage for first class mail in an envelope addressed to the Mail Stop ISSUE FEE address above, or being facsimile transmitted to the USPTO (571) 273-2885, on the date indicated below.

(Depositor's name)
(Signature)
(Date)

APPLICATION NO.	FILING DATE	FIRST NAMED INVENTOR	ATTORNEY DOCKET NO.	CONFIRMATION NO.
10/101,644	03/19/2002	Marc Vianello	15703.10002	8626

TITLE OF INVENTION: APPARATUS AND METHODS FOR PROVIDING CAREER AND EMPLOYMENT SERVICES

APPLN. TYPE	SMALL ENTITY	ISSUE FEE DUE	PUBLICATION FEE DUE	PREV. PAID ISSUE FEE	TOTAL FEE(S) DUE	DATE DUE
nonprovisional	YES	$720	$300	$0	$1020	04/16/2008

EXAMINER	ART UNIT	CLASS-SUBCLASS
JEANTY, ROMAIN	3623	705-009000

1. Change of correspondence address or indication of "Fee Address" (37 CFR 1.363).
☐ Change of correspondence address (or Change of Correspondence Address form PTO/SB/122) attached.
☐ "Fee Address" indication (or "Fee Address" Indication form PTO/SB/47; Rev 03-02 or more recent) attached. **Use of a Customer Number is required.**

2. For printing on the patent front page, list
(1) the names of up to 3 registered patent attorneys or agents OR, alternatively,
(2) the name of a single firm (having as a member a registered attorney or agent) and the names of up to 2 registered patent attorneys or agents. If no name is listed, no name will be printed.
1 _____
2 _____
3 _____

3. ASSIGNEE NAME AND RESIDENCE DATA TO BE PRINTED ON THE PATENT (print or type)

PLEASE NOTE: Unless an assignee is identified below, no assignee data will appear on the patent. If an assignee is identified below, the document has been filed for recordation as set forth in 37 CFR 3.11. Completion of this form is NOT a substitute for filing an assignment.

(A) NAME OF ASSIGNEE (B) RESIDENCE: (CITY and STATE OR COUNTRY)

Please check the appropriate assignee category or categories (will not be printed on the patent) : ☐ Individual ☐ Corporation or other private group entity ☐ Government

4a. The following fee(s) are submitted:
☐ Issue Fee
☐ Publication Fee (No small entity discount permitted)
☐ Advance Order - # of Copies _____

4b. Payment of Fee(s): **(Please first reapply any previously paid issue fee shown above)**
☐ A check is enclosed.
☐ Payment by credit card. Form PTO-2038 is attached.
☐ The Director is hereby authorized to charge the required fee(s), any deficiency, or credit any overpayment, to Deposit Account Number _____ (enclose an extra copy of this form).

5. **Change in Entity Status** (from status indicated above)
☐ a. Applicant claims SMALL ENTITY status. See 37 CFR 1.27. ☐ b. Applicant is no longer claiming SMALL ENTITY status. See 37 CFR 1.27(g)(2).

NOTE: The Issue Fee and Publication Fee (if required) will not be accepted from anyone other than the applicant; a registered attorney or agent; or the assignee or other party in interest as shown by the records of the United States Patent and Trademark Office.

Authorized Signature _____ Date _____

Typed or printed name _____ Registration No. _____

This collection of information is required by 37 CFR 1.311. The information is required to obtain or retain a benefit by the public which is to file (and by the USPTO to process) an application. Confidentiality is governed by 35 U.S.C. 122 and 37 CFR 1.14. This collection is estimated to take 12 minutes to complete, including gathering, preparing, and submitting the completed application form to the USPTO. Time will vary depending upon the individual case. Any comments on the amount of time you require to complete this form and/or suggestions for reducing this burden, should be sent to the Chief Information Officer, U.S. Patent and Trademark Office, U.S. Department of Commerce, P.O. Box 1450, Alexandria, Virginia 22313-1450. DO NOT SEND FEES OR COMPLETED FORMS TO THIS ADDRESS. SEND TO: Commissioner for Patents, P.O. Box 1450, Alexandria, Virginia 22313-1450.

Under the Paperwork Reduction Act of 1995, no persons are required to respond to a collection of information unless it displays a valid OMB control number.

Monster Worldwide, Inc. Exhibit 1010 (p.30/1328)

UNITED STATES PATENT AND TRADEMARK OFFICE

UNITED STATES DEPARTMENT OF COMMERCE
United States Patent and Trademark Office
Address: COMMISSIONER FOR PATENTS
P.O. Box 1450
Alexandria, Virginia 22313-1450
www.uspto.gov

APPLICATION NO.	FILING DATE	FIRST NAMED INVENTOR	ATTORNEY DOCKET NO.	CONFIRMATION NO.
10/101,644	03/19/2002	Marc Vianello	15703.10002	8626

27128 7590 01/16/2008

BLACKWELL SANDERS LLP
720 OLIVE STREET
SUITE 2400
ST. LOUIS, MO 63101

EXAMINER	
JEANTY, ROMAIN	
ART UNIT	PAPER NUMBER
3623	

DATE MAILED: 01/16/2008

Determination of Patent Term Adjustment under 35 U.S.C. 154 (b)
(application filed on or after May 29, 2000)

The Patent Term Adjustment to date is 147 day(s). If the issue fee is paid on the date that is three months after the mailing date of this notice and the patent issues on the Tuesday before the date that is 28 weeks (six and a half months) after the mailing date of this notice, the Patent Term Adjustment will be 147 day(s).

If a Continued Prosecution Application (CPA) was filed in the above-identified application, the filing date that determines Patent Term Adjustment is the filing date of the most recent CPA.

Applicant will be able to obtain more detailed information by accessing the Patent Application Information Retrieval (PAIR) WEB site (http://pair.uspto.gov).

Any questions regarding the Patent Term Extension or Adjustment determination should be directed to the Office of Patent Legal Administration at (571)-272-7702. Questions relating to issue and publication fee payments should be directed to the Customer Service Center of the Office of Patent Publication at 1-(888)-786-0101 or (571)-272-4200.

Monster Worldwide, Inc. Exhibit 1010 (p.31/1328)

Notice of Allowability	Application No.	Applicant(s)	
	10/101,644	VIANELLO, MARC	
	Examiner	Art Unit	
	Romain Jeanty	3623	

-- The MAILING DATE of this communication appears on the cover sheet with the correspondence address--

All claims being allowable, PROSECUTION ON THE MERITS IS (OR REMAINS) CLOSED in this application. If not included herewith (or previously mailed), a Notice of Allowance (PTOL-85) or other appropriate communication will be mailed in due course. **THIS NOTICE OF ALLOWABILITY IS NOT A GRANT OF PATENT RIGHTS.** This application is subject to withdrawal from issue at the initiative of the Office or upon petition by the applicant. See 37 CFR 1.313 and MPEP 1308.

1. ☒ This communication is responsive to *November 14, 2007*.

2. ☒ The allowed claim(s) is/are *5,6,10,14,17,200,204,205 and 208-225*.

3. ☐ Acknowledgment is made of a claim for foreign priority under 35 U.S.C. § 119(a)-(d) or (f).
   a) ☐ All b) ☐ Some* c) ☐ None of the:
      1. ☐ Certified copies of the priority documents have been received.
      2. ☐ Certified copies of the priority documents have been received in Application No. _____ .
      3. ☐ Copies of the certified copies of the priority documents have been received in this national stage application from the International Bureau (PCT Rule 17.2(a)).

   * Certified copies not received: _____.

Applicant has THREE MONTHS FROM THE "MAILING DATE" of this communication to file a reply complying with the requirements noted below. Failure to timely comply will result in ABANDONMENT of this application.
THIS THREE-MONTH PERIOD IS NOT EXTENDABLE.

4. ☐ A SUBSTITUTE OATH OR DECLARATION must be submitted. Note the attached EXAMINER'S AMENDMENT or NOTICE OF INFORMAL PATENT APPLICATION (PTO-152) which gives reason(s) why the oath or declaration is deficient.

5. ☐ CORRECTED DRAWINGS (as "replacement sheets") must be submitted.
   (a) ☐ including changes required by the Notice of Draftsperson's Patent Drawing Review (PTO-948) attached
      1) ☐ hereto or 2) ☐ to Paper No./Mail Date _____.
   (b) ☐ including changes required by the attached Examiner's Amendment / Comment or in the Office action of Paper No./Mail Date _____.

   Identifying indicia such as the application number (see 37 CFR 1.84(c)) should be written on the drawings in the front (not the back) of each sheet. Replacement sheet(s) should be labeled as such in the header according to 37 CFR 1.121(d).

6. ☐ DEPOSIT OF and/or INFORMATION about the deposit of BIOLOGICAL MATERIAL must be submitted. Note the attached Examiner's comment regarding REQUIREMENT FOR THE DEPOSIT OF BIOLOGICAL MATERIAL.

Attachment(s)

1. ☒ Notice of References Cited (PTO-892)
2. ☐ Notice of Draftperson's Patent Drawing Review (PTO-948)
3. ☐ Information Disclosure Statements (PTO/SB/08), Paper No./Mail Date _____
4. ☐ Examiner's Comment Regarding Requirement for Deposit of Biological Material
5. ☐ Notice of Informal Patent Application
6. ☒ Interview Summary (PTO-413), Paper No./Mail Date _____ .
7. ☒ Examiner's Amendment/Comment
8. ☒ Examiner's Statement of Reasons for Allowance
9. ☐ Other _____.

Romain Jeanty
Primary Examiner
Art Unit: 3623

EXAMINER'S AMENDMENT

1. An examiner's amendment to the record appears below. Should the changes and/or additions be unacceptable to applicant, an amendment may be filed as provided by 37 CFR 1.312. To ensure consideration of such an amendment, it MUST be submitted no later than the payment of the issue fee.

In the Claims:

Claims 1-4, 18-197 and 220: Canceled.

Authorization for this examiner's amendment was given in a telephone interview with Samuel Digirolamo (Reg. No. 29,915) on January 7, 2008.

Allowable Subject Matter

2. Claims 5-6, 10, 14, 17, 200, 204-205, 208-225 are allowed.

Reasons for Allowance

3. The following is an examiner's statement of reasons for allowance:

The closest prior art of record is Walker et al (U.S. Patent No. 5,884,270) and Pineda (WO0182185). Applicant's arguments filed on November 14, 2007 are deemed to be persuasive and adequately reflect the Examiner's opinion as to why claims 5-6, 10, 14, 17, 200, 204-205, 208-225 are allowable over the prior art of record.

Any comments considered necessary by applicant must be submitted no later than the payment of the issue fee and, to avoid processing delays, should preferably accompany the issue

fee. Such submissions should be clearly labeled "Comments on Statement of Reasons for Allowance."

Conclusion

4. The prior art made of record and not relied upon is considered pertinent to applicant's disclosure.

a. Reuning (US Patent No. 6,381,592) discloses a method for recruiting new employees.

b. Proquest "recruitsoft.com Announces Van Ella Alliance for Online Candidate Background Checks", discloses a web-based hiring system for recruiting job candidates.

Any inquiry concerning this communication or earlier communications from the examiner should be directed to Romain Jeanty whose telephone number is (571) 272-6732. The examiner can normally be reached on Mon-Thurs 7:30 am - 6:00 pm.

If attempts to reach the examiner by telephone are unsuccessful, the examiner's supervisor, Tariq R. Hafiz can be reached on (571) 272-6729. The fax phone number for the organization where this application or proceeding is assigned is 571-273-8300.

Information regarding the status of an application may be obtained from the Patent Application Information Retrieval (PAIR) system. Status information for published applications may be obtained from either Private PAIR or Public PAIR. Status information for unpublished applications is available through Private PAIR only. For more information about the PAIR system, see http://pair-direct.uspto.gov. Should you have questions on access to the Private PAIR system, contact the Electronic Business Center (EBC) at 866-217-9197 (toll-free).

RJ

Romain Jeanty
Primary Examiner
Art Unit 3623
January 7, 2007

Interview Summary	Application No.	Applicant(s)	
	10/101,644	VIANELLO, MARC	
	Examiner	Art Unit	
	Romain Jeanty	3623	

All participants (applicant, applicant's representative, PTO personnel):

(1) *Samuel Digirolamo*. (3)_____.

(2) *Romain Jeanty*. (4)_____.

Date of Interview: _____.

Type: a)☒ Telephonic b)☐ Video Conference
c)☐ Personal [copy given to: 1)☐ applicant 2)☐ applicant's representative]

Exhibit shown or demonstration conducted: d)☐ Yes e)☒ No.
If Yes, brief description: _____.

Claim(s) discussed: *1-4, 18-197 and 220*.

Identification of prior art discussed: *None*.

Agreement with respect to the claims f)☒ was reached. g)☐ was not reached. h)☐ N/A.

Substance of Interview including description of the general nature of what was agreed to if an agreement was reached, or any other comments: *See Examiner's Amendment*.

(A fuller description, if necessary, and a copy of the amendments which the examiner agreed would render the claims allowable, if available, must be attached. Also, where no copy of the amendments that would render the claims allowable is available, a summary thereof must be attached.)

THE FORMAL WRITTEN REPLY TO THE LAST OFFICE ACTION MUST INCLUDE THE SUBSTANCE OF THE INTERVIEW. (See MPEP Section 713.04). If a reply to the last Office action has already been filed, APPLICANT IS GIVEN A NON-EXTENDABLE PERIOD OF THE LONGER OF ONE MONTH OR THIRTY DAYS FROM THIS INTERVIEW DATE, OR THE MAILING DATE OF THIS INTERVIEW SUMMARY FORM, WHICHEVER IS LATER, TO FILE A STATEMENT OF THE SUBSTANCE OF THE INTERVIEW. See Summary of Record of Interview requirements on reverse side or on attached sheet.

Examiner Note: You must sign this form unless it is an Attachment to a signed Office action.

_____
Examiner's signature, if required

Notice of References Cited	Application/Control No. 10/101,644	Applicant(s)/Patent Under Reexamination VIANELLO, MARC	
	Examiner Romain Jeanty	Art Unit 3623	Page 1 of 1

U.S. PATENT DOCUMENTS

*		Document Number Country Code-Number-Kind Code	Date MM-YYYY	Name	Classification
*	A	US-6,381,592	04-2002	Reuning, Stephen Michael	707/3
	B	US-			
	C	US-			
	D	US-			
	E	US-			
	F	US-			
	G	US-			
	H	US-			
	I	US-			
	J	US-			
	K	US-			
	L	US-			
	M	US-			

FOREIGN PATENT DOCUMENTS

*		Document Number Country Code-Number-Kind Code	Date MM-YYYY	Country	Name	Classification
	N					
	O					
	P					
	Q					
	R					
	S					
	T					

NON-PATENT DOCUMENTS

*		Include as applicable: Author, Title Date, Publisher, Edition or Volume, Pertinent Pages)
	U	Proquest "recruitsoft.com Announces Van Ella Alliance for Online Candidate Background Checks", 2000
	V	
	W	
	X	

*A copy of this reference is not being furnished with this Office action. (See MPEP § 707.05(a).)
Dates in MM-YYYY format are publication dates. Classifications may be US or foreign.

UNITED STATES PATENT AND TRADEMARK OFFICE

COMMISSIONER FOR PATENTS
UNITED STATES PATENT AND TRADEMARK OFFICE
WASHINGTON, D.C. 20231
www.uspto.gov

Bib Data Sheet

CONFIRMATION NO. 8626

SERIAL NUMBER	FILING DATE	CLASS	GROUP ART UNIT	ATTORNEY DOCKET NO.
10/101,644	03/19/2002 RULE	705	~~2161~~ 2163 3623	15703.10002

APPLICANTS
Marc Vianello, Overland Park, KS;

** CONTINUING DATA ********** NONE

** FOREIGN APPLICATIONS ********** NONE

IF REQUIRED, FOREIGN FILING LICENSE GRANTED ** SMALL ENTITY **
** 04/30/2002

Foreign Priority claimed	STATE OR COUNTRY	SHEETS DRAWING	TOTAL CLAIMS	INDEPENDENT CLAIMS
☐ yes ☑ no	KS	21	~~25~~ ~~197~~	~~31~~ 7
35 USC 119 (a-d) conditions ☐ yes ☑ no ☐ Met after Allowance				
Verified and Acknowledged Examiner's Signature Initials				

ADDRESS ~~27526~~
Blackwell Sanders Peper Martin LLP Customer Number 27526
40 Corporate Woods, Suite 1200
9401 Indian Creek Parkway
Overland Park, Kansas 66210

TITLE
Apparatus and methods for providing career and employment services

FILING FEE RECEIVED	FEES: Authority has been given in Paper	
3139	No. _____ to charge/credit DEPOSIT ACCOUNT No. _____ for following:	☐ All Fees ☐ 1.16 Fees (Filing) ☐ 1.17 Fees (Processing Ext. of time) ☐ 1.18 Fees (Issue) ☐ Other _____ ☐ Credit

Issue Classification	Application/Control No.	Applicant(s)/Patent under Reexamination	
	10/101,644	VIANELLO, MARC	
	Examiner	Art Unit	
	Romain Jeanty	3623	

ISSUE CLASSIFICATION

ORIGINAL CLASS	ORIGINAL SUBCLASS	CLASS	CROSS REFERENCE(S) SUBCLASS (ONE SUBCLASS PER BLOCK)						
705	9	705	11						
INTERNATIONAL CLASSIFICATION									
G 0 6 F	9/46								
	/								
	/								
	/								
	/								

(Assistant Examiner) (Date)

Patricia Lewis 1/7/08
(Legal Instruments Examiner) (Date)

Romain Jeanty 1-7-08
ROMAIN JEANTY
PRIMARY EXAMINER
(Primary Examiner) (Date)

Total Claims Allowed: 25

O.G. Print Claim(s)	O.G. Print Fig.
1	16

☐ Claims renumbered in the same order as presented by applicant ☐ CPA ☐ T.D. ☐ R.1.47

Final	Original	Final	Original	Final	Original	Final	Original	Final	Original	Final	Original	Final	Original
	1		31		61		91		121		151		181
	2		32		62		92		122		152		182
	3		33		63		93		123		153		183
	4		34		64		94		124		154		184
1	5		35		65		95		125		155		185
2	6		36		66		96		126		156		186
	7		37		67		97		127		157		187
	8		38		68		98		128		158		188
	9		39		69		99		129		159		189
3	10		40		70		100		130		160		190
	11		41		71		101		131		161		191
	12		42		72		102		132		162		192
	13		43		73		103		133		163		193
	14		44		74		104		134		164		194
	15		45		75		105		135		165		195
	16		46		76		106		136		166		196
	17		47		77		107		137		167		197
	18		48		78		108		138		168		198
	19		49		79		109		139		169		199
	20		50		80		110		140		170	4	200
	21		51		81		111		141		171		201
	22		52		82		112		142		172		202
	23		53		83		113		143		173		203
	24		54		84		114		144		174	5	204
	25		55		85		115		145		175	6	205
	26		56		86		116		146		176		206
	27		57		87		117		147		177		207
	28		58		88		118		148		178	7	208
	29		59		89		119		149		179	12	209
	30		60		90		120		150		180	13	210

Monster Worldwide, Inc. Exhibit 1016 (p.39/1328)

Index of Claims (continued)

Application/Control No.	Applicant(s)/Patent under Reexamination
10/101,644	VIANELLO, MARC
Examiner	**Art Unit**
Romain Jeanty	3623

√	Rejected	–	(Through numeral) Cancelled	N	Non-Elected	A	Appeal
=	Allowed	÷	Restricted	I	Interference	O	Objected

Claim		Date								
Final	Original									
	151									
	152									
	153									
	154									
	155									
	156									
	157									
	158									
	159									
	160									
	161									
	162									
	163									
	164									
	165									
	166									
	167									
	168									
	169									
	170									
	171									
	172									
	173									
	174									
	175									
	176									
	177									
	178									
	179									
	180									
	181									
	182									
	183									
	184									
	185									
	186									
	187									
	188									
	189									
	190									
	191									
	192									
	193									
	194									
	195									
	196									
	197									
	198									
	199									
4	200	=								

Claim		Date								
Final	Original									
	201									
	202									
	203									
5	204	=								
6	205	=								
	206									
	207									
7	208									
12	209									
13	210									
14	211									
15	212									
16	213									
17	214									
18	215									
19	216									
20	217									
21	218									
22	219									
	220									
23	221									
25	222									
24	223									
11	224									
8	225									
	226									
	227									
	228									
	229									
	230									
	231									
	232									
	233									
	234									
	235									
	236									
	237									
	238									
	239									
	240									
	241									
	242									
	243									
	244									
	245									
	246									
	247									
	248									
	249									
	250									

Claim		Date								
Final	Original									
	251									
	252									
	253									
	254									
	255									
	256									
	257									
	258									
	259									
	260									
	261									
	262									
	263									
	264									
	265									
	266									
	267									
	268									
	269									
	270									
	271									
	272									
	273									
	274									
	275									
	276									
	277									
	278									
	279									
	280									
	281									
	282									
	283									
	284									
	285									
	286									
	287									
	288									
	289									
	290									
	291									
	292									
	293									
	294									
	295									
	296									
	297									
	298									
	299									
	300									

Index of Claims

Application/Control No.	Applicant(s)/Patent under Reexamination
10/101,644	VIANELLO, MARC
Examiner	**Art Unit**
Romain Jeanty	3623

√	Rejected	–	(Through numeral) Cancelled	N	Non-Elected	A	Appeal
=	Allowed	÷	Restricted	I	Interference	O	Objected

Claim		Date
Final	Original	1/7/08
	1	
	2	
	3	
	4	
1	5	=
	6	=
2	7	
	8	
	9	
3	10	=
	11	
	12	
	13	
9	14	
	15	
	16	
10	17	=
	18	
	19	
	20	
	21	
	22	
	23	
	24	
	25	
	26	
	27	
	28	
	29	
	30	
	31	
	32	
	33	
	34	
	35	
	36	
	37	
	38	
	39	
	40	
	41	
	42	
	43	
	44	
	45	
	46	
	47	
	48	
	49	
	50	

Claim		Date
Final	Original	
	51	
	52	
	53	
	54	
	55	
	56	
	57	
	58	
	59	
	60	
	61	
	62	
	63	
	64	
	65	
	66	
	67	
	68	
	69	
	70	
	71	
	72	
	73	
	74	
	75	
	76	
	77	
	78	
	79	
	80	
	81	
	82	
	83	
	84	
	85	
	86	
	87	
	88	
	89	
	90	
	91	
	92	
	93	
	94	
	95	
	96	
	97	
	98	
	99	
	100	

Claim		Date
Final	Original	
	101	
	102	
	103	
	104	
	105	
	106	
	107	
	108	
	109	
	110	
	111	
	112	
	113	
	114	
	115	
	116	
	117	
	118	
	119	
	120	
	121	
	122	
	123	
	124	
	125	
	126	
	127	
	128	
	129	
	130	
	131	
	132	
	133	
	134	
	135	
	136	
	137	
	138	
	139	
	140	
	141	
	142	
	143	
	144	
	145	
	146	
	147	
	148	
	149	
	150	

Search Notes

Application/Control No.	Applicant(s)/Patent under Reexamination	
10/101,644	VIANELLO, MARC	
Examiner	**Art Unit**	
Romain Jeanty	3623	

SEARCHED			
Class	Subclass	Date	Examiner
705	9, 11	1/7/2008	RJ

INTERFERENCE SEARCHED			
Class	Subclass	Date	Examiner
705	**9, 11**	1/7/2008	**RJ**

SEARCH NOTES (INCLUDING SEARCH STRATEGY)		
	DATE	EXMR
Updated West	1/7/2008	RJ
Dialog	1/7/2008	RJ
Internet		

Refine Search

Search Results -

Term	Documents
(6 AND 2).USPT.	35
(L2 AND L6).USPT.	35

Database:
US Pre-Grant Publication Full-Text Database
US Patents Full-Text Database
US OCR Full-Text Database
EPO Abstracts Database
JPO Abstracts Database
Derwent World Patents Index
IBM Technical Disclosure Bulletins

Search: L7

Refine Search

Recall Text Clear Interrupt

Search History

DATE: Tuesday, January 15, 2008 Purge Queries Printable Copy Create Case

Set Name side by side	Query	Hit Count	Set Name result set
	DB=USPT; THES=DTIC; PLUR=YES; OP=OR		
L7	l2 and L6	35	L7
L6	(fee or paid or payment or invoice or bill$) near5 (employer$ or hirer$ or personnel$ or manager$)	1351	L6
L5	(((personal or contact) near5 (data or information)) near5 (interview$ or meet$1 or meeting$) near5 (mutual or consent or agree$ or accord or common) and (interview$ or follow adj up$ or meet$))	7	L5
L4	(((personal or contact) near5 (data or information)) near5 (interview$ or meet$1 or meeting$) near5 (mutual or consent or agree$ or accord or common) near5 (interview$ or follow adj up$ or meeting or discuss$ or speak$ or talk$))	6	L4
L3	(((personal or contact) near5 (data or information)) and (interview$ or meet$1 or meeting$))	17140	L3
	(search$ or retriev$) near5 (employer$ or hirer$ or personnel$ or manager$ human adj resource$ or HR) near5 (applicant$ or candidate$ or job adj seeker$		

L2	or position adj seeker$ or employee$ or worker$ or prospect$1 or user$) and (attribute$ or profile$ or requirement$ or requisite$ or preference$)	421	L2
L1	(search$ or retriev$) near5 (employer$ or hirer$ or personnel$ or manager$ human adj resource$ or HR) near5 (applicant$ or candidate$ or job adj seeker$ or position adj seeker$ or employee$ or worker$ or prospect$1 or user$) near5 (attribute$ or profile$ or requirement$ or requisite$ or preference$)	46	L1

END OF SEARCH HISTORY

ProQuest

Results – powered by ProQuest® Smart Search

Suggested Topics About

Wages & salaries AND Employers
Human resource management
Human resource management AND Wages & salaries
Human resource management AND Organizational behavior
Human resource management AND Fees & charges
Human resource management AND Models
Human resource management AND Regression ana
Human resource management AND Polls & surveys

14180 documents found for: *(((employer*) pre/3 (fee* or pay*)) and PDN (<3/19/2002))* » Refine Search | Set Up Alert

All sources | Scholarly Journals | Magazines | Trade Publications | Newspapers | Reference/ Reports | Dis

Mark all 0 marked items: Email / Cite / Export Show only full text Sort results by: Most re

1. **Journal-World, Lawrence, Kan., Consumer Column**
Karen Palermo Bledsoe. **Knight Ridder Tribune Business News.** Mar 19, 2002. p. 1
Abstract | Full text

2. **The College of Law on redundancy, investing for family andqualifications; [Final 1 Edition]**
The Times. London (UK): Mar 19, 2002. p. Law.10
Abstract | Full text

3. **Work Place; SHOP TALK; Payment Will Depend on Timing of Vacation Accrual; [Home Edition]**
Los Angeles Times. Los Angeles, Calif.: Mar 18, 2002. p. C.3
Abstract | Full text

4. **Swedish system being watched closely by Europeans**
Phyllis Feinberg. **Pensions & Investments.** Chicago: Mar 18, 2002. Vol. 30, Iss. 6; p. 14 (2 pages)
Abstract | Full text

5. **COPING WITH FINANCIAL EMERGENCIES ; THE KEY TO SUCCESS IS PLANNING BEFORE MISFO FALLEN UPON YOU; [Final Edition]**
Dee Klees Staff writer. **The Post - Standard.** Syracuse, N.Y.: Mar 18, 2002. p. 5
Abstract | Full text

6. **Legal brief Work disputes rules tightened by legislation; [BUSINESS SUPPLEMENT Edition]**
Alan Masson. **The Scotsman.** Edinburgh (UK): Mar 18, 2002. p. 20
Abstract | Full text

7. **Office temps to be given equal rights: Government clash with unions looms after EU directive**
Gaby Hinsliff Chief Political Correspondent. **The Observer.** London (UK): Mar 17, 2002. p. 7
Abstract | Full text

8. **Pensions reform Dear Lorna**
Answer by Lorna Bourke. **The Sunday Telegraph.** London (UK): Mar 17, 2002. p. 16

Abstract | Full text

9. **Canadian job hunts go online: Even executives try Web to find employees; [Final Edition]**
Cheryl Cornacchia. **The Ottawa Citizen.** Ottawa, Ont.: Mar 16, 2002. p. K.2
Abstract | Full text

10. **JOB LOSS CAN TRIGGER COVERAGE CRISIS; [Home Final Edition]**
For The Dispatch, Armond D. Budish. **Columbus Dispatch.** Columbus, Ohio: Mar 15, 2002. p. 03.F
Abstract | Full text

11. **Rewarding law breaking; [All Edition]**
Providence Journal. Mar 15, 2002. p. B.04
Abstract | Full text

12. **Laid-off workers abandoned to poverty, delegates told**
Mark O'Neill. **South China Morning Post.** Hong Kong: Mar 15, 2002. p. 7
Abstract | Full text

13. **Lender balks over job status**
Henry Savage, SPECIAL TO THE WASHINGTON TIMES. **Washington Times.** Washington, D.C.: Mar 1
Abstract | Full text

14. **Arizona lags in jobless aid; [FINAL Edition]**
Jonathan J. Higuera. **Arizona Daily Star.** Tucson, Ariz.: Mar 13, 2002. p. D.1
Abstract | Full text

15. **Study Raps New Mexico Insurance Program for Miserly Aid to the Unemployed**
Aaron Baca. **Knight Ridder Tribune Business News.** Mar 13, 2002. p. 1
Abstract | Full text

16. **Should smokers get a break?; [Final 1 Edition]**
Nick Wyke. **The Times.** London (UK): Mar 13, 2002. p. Creme.3
Abstract | Full text

17. **Health insurance has become a sickening business for all**
Amy Lindgren. **Knight Ridder Tribune News Service.** Mar 12, 2002. p. 1
Abstract | Full text

18. **Employers face perils in fighting e-mail offenders; [Final 4 Edition]**
Elizabeth Judge. **The Times.** London (UK): Mar 12, 2002. p. 34
Abstract | Full text

19. **Workers comp can benefit from TQM**
Jay Blakey. **Business Insurance.** Chicago: Mar 11, 2002. Vol. 36, Iss. 10; p. 10 (2 pages)
Abstract | Full text

20. **Lawmaker's bill on wages shortchanges communities; [CITY Edition]**
Tonyaa Weathersbee, Times-Union columnist. **Florida Times Union.** Jacksonville, Fla.: Mar 11, 2002. p.
Abstract | Full text

21. **Paycheck that comes with strings could be a felony; [2 STAR Edition]**

RONALD LIPMAN. **Houston Chronicle.** Houston, Tex.: Mar 11, 2002. p. 1

Abstract | Full text

22. **Job hunt goes online - big time; Even executives turning to the Web; [Final Edition]**
CHERYL CORNACCHIA. **The Gazette.** Montreal, Que.: Mar 11, 2002. p. D.1.BRE

Abstract | Full text

23. **COVERAGE FOR GRAD WILL COST PLENTY; [Final Edition]**
JAMES T. MULDER HEALTH CARE NOTEBOOK. **The Post - Standard.** Syracuse, N.Y.: Mar 11, 2002. p

Abstract | Full text

24. **Experts Strongly Urge IRA Rollover for Employees Leaving Jobs**
Paula Burkes Erickson. **Knight Ridder Tribune Business News.** Mar 10, 2002. p. 1

Abstract | Full text

25. **Saint Paul Pioneer Press, Minn., Career Column**
Amy Lindgren. **Knight Ridder Tribune Business News.** Mar 10, 2002. p. 1

Abstract | Full text

26. **Deputy overtime lawsuit likely headed to court**
JENNIFER MACK. **South Bend Tribune.** South Bend, Ind.: Mar 10, 2002.

Abstract | Full text

27. **OUR OPINION: Employers shouldn't have to foot this bill; [Home Edition]**
JIM WOOTEN. **The Atlanta Journal - Constitution.** Atlanta, Ga.: Mar 10, 2002. p. E.10

Abstract | Full text

28. **Bosses warned over women's pay shortfall; [1ST_MER Edition]**
DARREN BEHAR. **Daily Mail.** London (UK): Mar 9, 2002. p. 22

Abstract | Full text

29. **A helping hand can add shine to the package: EMPLOYEE BENEFITS ADVICE: Experts can assess job move and potential losses, says Debbie Harrison; [London edition]**
Harrison, Debbie. **Financial Times.** London (UK): Mar 9, 2002. p. 04

Abstract | Full text

30. **Jobless Rate Drops for Second Consecutive Month; Employers Expand Payrolls**
James P. Miller. **Knight Ridder Tribune Business News.** Mar 9, 2002. p. 1

Abstract | Full text

1-30 of 14180 < First | < Previous 1 2 3 4 5 6 7

Want to be notified of new results for this search? Set Up Alert Results pe

Did you find what you're looking for? If not, refine your search below or try these suggestions.

Suggested Topics About < Pr

Wages & salaries AND Employers
Human resource management
Human resource management AND Wages & salaries
Human resource management AND Organizational behavior
Human resource management AND Fees & charges
Human resource management AND Models
Human resource management AND Regression ana
Human resource management AND Polls & surveys

Basic Search

Tools: Search Tips Browse Topics 7 Recent Searches

(((employer*) pre/3 (fee* or pay*)) and PDN (<3/19/2002)) Search Clear

Database: Multiple databases... Select multiple databases

Date range: All dates

Limit results to: ☐ Full text documents only

☐ Scholarly journals, including peer-reviewed About

More Search Options

Copyright © 2008 ProQuest LLC. All rights reserved.

ProQuest

```
show files
File 256:SoftBase:Reviews,Companies&Prods. 82-2003/May
        (c)2003 Info.Sources Inc
? ds

Set     Items   Description
S1       4123   EMPLOYEE? OR  (JOB OR EMPLOYMENT)(3N) ( CANDIDATE? OR APPL-
            ICANT? OR SEEKER?)
S2       1487   (PERSONAL OR  CONTACT)(2N)INFORMATION
S3        185   RESUME OR RESUMES OR CURRICULUM()VITAE
S4       2806   FEE OR PAID OR PAYMENT OR INVOICE OR BILLED
S5       6324   WORKER? OR PERSONNEL OR CONTRACTOR? OR EMPLOYEE?
S6      43094   BUSINESS? OR CORPORATION? OR COMPAN? OR EMPLOYER?
S7        245   EMPLOYER?
S8       1963   INTERVIEW? OR MEETING
S9       3892   CONSENT? OR PERMISSION? OR REQUEST?
S10         0   S1 AND (S2 OR S3) AND S6 AND S7 AND S8 AND S9
S11     32042   JOB? OR EMPLOYMENT? OR SKILL? OR POSITION? OR WORK?()(EXPE-
            RIENCE? OR HISTOR?) OR KNOWLEDGE OR ABILIT? OR QUALIF? OR TAS-
            K? OR PROJECT?
S12         5   S1 AND (S2 OR S3 OR S11) AND S7 AND S4
S13         1   S12 AND (S8 OR S9)
S14         0   AU='VIANELLO M'
S15         0   S1 AND (S2 OR S3) AND S7 AND S4 AND S9 AND S8
S16         0   S1 AND (S2 OR S3) AND S6 AND S8 AND S4
S17         1   S1 AND S7 AND S4 AND S8
S18         0   S17 AND S9
S19         9   S9(4N)S8
S20         0   S19 AND S1 AND (S2 OR S3)
S21        63   (JOB OR EMPLOYMENT)(3N)SEARCH?
S22         2   (S1 OR S21)(7N)S7(7N)S8
S23         0   S22 AND S3
S24       447   (EMPLOYMENT OR JOB)/DE
S25        34   S24 AND S1
S26         7   S25 AND S4
?
```

```
show files
File 610:Business Wire 1999-2003/Jun 17
         (c) 2003 Business Wire.
File 810:Business Wire 1986-1999/Feb 28
         (c) 1999 Business Wire
File 476:Financial Times Fulltext 1982-2003/Jun 17
         (c) 2003 Financial Times Ltd
File 634:San Jose Mercury  Jun 1985-2003/Jun 15
         (c) 2003 San Jose Mercury News
File  20:Dialog Global Reporter 1997-2003/Jun 17
         (c) 2003 The Dialog Corp.
? ds

Set     Items   Description
S1    1508114   EMPLOYEE? OR  (JOB OR EMPLOYMENT)(3N) ( CANDIDATE? OR APPL-
            ICANT? OR SEEKER?)
S2     561340   (PERSONAL OR  CONTACT)(2N)INFORMATION
S3     227152   RESUME OR RESUMES OR CURRICULUM()VITAE
S4    3901923   FEE OR FEES OR PAID OR PAYMENT? OR PAY OR INVOICE? OR BILL-
            ED
S5    2926150   WORKER? OR PERSONNEL OR CONTRACTOR? OR EMPLOYEE?
S6     360534   EMPLOYER?
S7    3085472   INTERVIEW? OR MEETING
S8    3287322   CONSENT? OR PERMISSION? OR REQUEST? OR AGREE? ? OR AGREEING
S9    8663107   JOB? OR EMPLOYMENT? OR SKILL? OR POSITION? OR WORK?()(EXPE-
            RIENCE? OR HISTOR?) OR KNOWLEDGE OR ABILIT? OR QUALIF? OR TAS-
            K? OR PROJECT?
S10     14650   (JOB OR EMPLOYMENT)(3N)SEARCH?
S11    508779   DATABASE? OR DATABANK? OR BULLETIN()BOARD OR DATA()(BANK? -
            OR BASE?)
S12     20117   (FEE OR FEES OR PAID OR PAYMENT OR PAY OR INVOICE? OR BILL-
            ED)(4N)(EMPLOYER? OR RECRUITER?)
S13     20615   RECRUITER?
S14     17457   S9(4N)S11
S15     17457   S9(4N)S11
S16        74   S14(2S)S12
S17        64   S16 AND S1
S18         4   S17 AND S7 AND S8
S19         4   RD (unique items)
S20        44   S12(S)S1(S)(S2 OR S3)
S21        41   RD (unique items)
S22        13   S21 AND S7
S23         9   S22 NOT PD=20020319:20030618
?
```

IN THE UNITED STATES PATENT AND TRADEMARK OFFICE

Application of: Marc Vianello	:	Examiner: Romain Jeanty
Serial No.: 10/101,644	:	Group Art Unit: 3623
Filed: March 19, 2002	:	Attorney Docket No.: 15703.10002
For: APPARATUS AND METHODS FOR PROVIDING CAREER EMPLOYMENT SERVICES	:	Customer No.: 27128
	:	Confirmation No.: 8626

AMENDED APPEAL BRIEF TO BOARD OF PATENT APPEALS AND INTERFERENCES UNDER 37 C.F.R. SECTION 41.37

Mail Stop Appeal Brief - Patents
Commissioner for Patents
P.O. Box 1450
Alexandria, VA 22313-1450

Sir:

Appellant submits the following Amended Appeal Brief to the Board of Patent Appeals and Interferences in response to the Notification of Non-Compliant Appeal Brief dated October 18, 2007. In the Notification, the Brief was deemed defective because Appellant did not list claims 210-213, 215-220, 222, 224 and 225 as referenced by the Examiner in the Notification in the Claims Appendix. Appellant has now added all such claims to the Claims Appendix. It is respectfully submitted that Claims 210-213, 215-218, 222, 224 and 225 are merely objected to; Claim 219 has been allowed; and Claim 220 has been withdrawn. None of these claims are on appeal. The status of all of these claims is fully set forth in the Status of Claims section of Appellant's Brief. Nevertheless, pursuant to the Examiner's request, these claims are now listed in the Amended Claims Appendix.

Monster Worldwide, Inc. Exhibit 1010 (p.51/1328)

TABLE OF CONTENTS

	Page
1. The Real Party In Interest	3
2. Related Appeals and Interferences	4
3. Status of Claims	5
4. Status of Amendments	6
5. Summary of the Claimed Subject Matter	8
6. Grounds of Rejection to be Reviewed on Appeal	21
7. The Relevant Law	22
8. Arguments	27
9. Conclusions	54
10. Appendix A – Claims Appendix	56
11. Appendix B – Evidence Appendix	65
12. Appendix C – Related Proceedings Appendix	66

1. THE REAL PARTY IN INTEREST

The real party in interest for the above referenced application is Mr. Marc Vianello, an individual, with an office at 6299 Nall Avenue, Suite 210, Mission, Kansas 66202. Mr. Vianello is the inventor and sole owner of the entire right, title and interest in and to the invention and the pending patent application.

2. RELATED APPEALS AND INTERFERENCES

There are no other appeals or interferences known to Applicant (Appellant) or Applicant's (Appellant's) Legal Representative which will directly affect, or be directly affected by, or have a bearing on, the Board of Patent Appeals and Interferences' decision in the pending Appeal.

3. STATUS OF CLAIMS

Claims 5, 6, 10, 14, 17, 200, 204, 205, 208-219 and 221-225 are currently pending in the application. Claims 1-4, 18-197 and 220 have been withdrawn. Claim 219 has been allowed. Claims 205, 210-213, 215-218, 222, 224 and 225 are merely objected to. Claims 7-9, 11-13, 15-16, 198-199, 201-203 and 206-207 were cancelled.

Claims 5, 6, 10, 14, 17, 200, 204, 205, 208, 209, 214, 221 and 223 stand rejected and are the subject of this appeal.

Claim 205 is both merely objected to and rejected.

For the record, depending upon the outcome of this Appeal, Applicant hereby reserves his right to accept allowed Claim 219 and to rewrite any one or more of objected claims 205, 210-213, 215-218, 222, 224 and 225 so as to include all of the limitations of any base claim and any intervening claims, thereby putting such objected claims in allowable form. Applicant also reserves his right to file additional divisional applications to continue the prosecution of all withdrawn claims.

Monster Worldwide, Inc. Exhibit 1010 (p.55/1328)

4. STATUS OF AMENDMENTS

In the current application, an initial Final Rejection was mailed on May 19, 2004. On August 23, 2004 Applicant's submitted an Amendment along with a Notice of Appeal. On October 12, 2004 an Advisory Action was issued and the previously filed Amendment was not entered into the record. In response to the Advisory Action a Request for Continued Examination was submitted on October 19, 2004. On January 12, 2005 a non-final office action was mailed. An Amendment in response to the non-final office action was filed on April 4, 2005.

A second Final Rejection was mailed July 14, 2005. On September 2, 2005, Applicant's filed a Request for Continued Examination along with an Amendment. On November 10, 2005 a non-final office action was mailed. A response to this office action was filed on January 23, 2006. A Supplemental Amendment was filed on April 20, 2006. On August 1, 2006 a restriction requirement was issued by the Examiner. A response to the restriction requirement and an election of claims was filed August 22, 2006.

On November 8, 2006 a Third Final Rejection was mailed. In response to this Final Rejection a Notice of Appeal was filed by Applicants. No further amendments were filed and all of the above referenced amendments were entered into the record.

For the record, depending upon the outcome of this Appeal, Applicant hereby reserves his right to accept allowed Claim 219 and to rewrite any one or more of objected claims 205, 210-213, 215-218, 222, 224 and 225 so as to include all of the limitations of any base claim and

any intervening claims, thereby putting such objected claims in allowable form. Applicant also reserves his right to file additional divisional applications to continue the prosecution of all withdrawn claims.

5. SUMMARY OF THE CLAIMED SUBJECT MATTER

There are five (5) independent claims involved in this appeal, namely, Claims 5, 14, 209, 214 and 221. Independent Claim 219 has been allowed and is not part of this Appeal. Support for the independent claims on appeal is set forth below by reference to the specification by page and line number, and by reference to the appropriate drawings by reference characters.

Dependent Claim 205 is both rejected and merely objected to in the Final Office Action. Although Applicant believes that Claim 205 is merely objected to and would be allowable if rewritten in independent form, to preserve Applicant's rights with respect to Claim 205, Applicant is also appealing Claim 205 if such claim is rejected under 35 U.S.C. §103(a).

The present invention is directed to systems, methods, distributed networks and computer-readable media which are provided to both candidates and employers for employment services. In one embodiment, a career web site is provided wherein users wishing to search jobs or candidate profiles do not have to register to gain access to a subset of features on the site. Background information associated with a candidate's capabilities and attributes is received from a candidate in a structured format. Job description information is received from employers in a structured format. Prospective matches are identified between employers and candidates, and employers and candidates are given an opportunity to mutually consent to the exchange of candidate contact information. This exchange of information takes place before any direct contact between a particular candidate and a particular employer. After such mutual consent has been granted, a financial transaction is consummated wherein a user pays a fee to the career site operator. The fee is generated when a user elects to purchase contact information corresponding to a candidate profile. A participating user pays nothing until it identifies a candidate having an

Monster Worldwide, Inc. Exhibit 1010 (p.58/1328)

appropriate set of skills and experience, and the candidate has expressed an interest in the employer.

Independent Claim 5 is directed to a method executed by a computer processor for authorizing information exchanged between at least one of a plurality of candidates and at least one of a plurality of employers prior to any direct contact between the candidate and the employer (Page 20, Line 20 to Page 21, Line 1; Page 21, Lines 9-13; Fig. 12, Ref. Nos. 1206, 1208, 1209, 1210). The candidate will have one or more candidate attributes including candidate minimum requirements (Page 41, Line 22 to Page 42, Line 11; Page 55, Lines 2-5; Page 56, Lines 6-17; Fig. 2, Ref. No. 204; Fig. 3, Ref. Nos. 304, 306, 307), and the employer will have one or more employer attributes including employer minimum requirements (Page 71, Line 20 to Page 72, Line 21; Page 74, Lines 13-16; Fig. 8, Ref. Nos. 808, 823, 824, 825, 826). The one or more candidate attributes and minimum requirements are then stored in a candidate database which includes a searchable profile of the candidate (Page 22, Line 15 to Page 24, Line 19; Page 27, Lines 1-3; Fig. 2, Ref. Nos. 213-224; Fig. 3, Ref. No. 309). In similar fashion, the one or more employer attributes and minimum requirements are stored in an employer database which includes a searchable employer profile (Page 17, Line 20 to Page 18, Line 5; Page 43, Lines 10-16; Page 71, Line 16 to Page 72, Line 21; Page 74, Lines 8-12; Fig. 8, Ref. No. 808). The present method includes receiving a search request from either a candidate or an employer to search the searchable profile of one of the candidate and employer databases for a possible employment opportunity based upon certain search parameters (Page 19, Lines 10-15; Page 28, Lines 1-2; Page 41, Lines 9-15; Page 42, Lines 12-19; Page 43, Lines 21-23; Page 49, Lines 15-20; Fig. 2, Ref. Nos. 206, 212). Once the search request is received, the search request is processed and results of the search request are provided to the requesting candidate or employer

Monster Worldwide, Inc. Exhibit 1010 (p.59/1328)

(Page 19, Line 5 to Page 20, Line 15; Page 75, Line 21 to Page 83, Line 13; Fig. 4, Ref. Nos. 401, 409; Fig. 10, Ref. Nos. 1003, 1004, 1006, 1008, 1009, 1010). Once the search results are provided to either the requesting candidate or employer, the method further includes receiving at least one request for release of contact information from the requesting candidate or employer based upon the search results (Page 62, Lines 10-18; Page 83, Line 21 to Page 84, Line 4; Fig. 4, Ref. No. 414; Fig. 10, Ref. Nos. 1011, 1014). Once a request for release of contact information has been received, the method then determines whether the attributes of the requesting candidate or employer satisfy the minimum requirements of the non-requesting party (Page 19, Line 16 to Page 20, Line 15; Page 62, Lines 19-23; Page 63, Lines 1-18; Fig. 4, Ref. No. 417; Fig. 10, Ref. No. 1017; Fig. 7A, Ref. Nos. 702, 706; Fig. 7B, Ref. Nos. 752, 756). Once the minimum requirements are determined, the method must receive a response from the non-requesting candidate or employer consenting to the release of contact information to the requesting party (Page 20, Line 16 to Page 21, Line 20; Page 75, Lines 1-7; Page 84, Lines 1-3; Page 88, Line 20 to Page 90, Line 11; Fig. 11, Ref. Nos. 1103, 1105, 1108; Fig. 12, Ref. Nos. 1201, 1206). Once a positive response for the release of contact information has been received, the method then obligates a payment due in real time based on the response to the request for release of contact information wherein the payment due is a fee to a carrier site operator (Page 16, Line 16 to Page 17, Line 11; Page 90, Lines 14-19; Fig. 12, Ref. Nos. 1210, 1211, 1212, 1213). Once payment is obligated, the contact information is provided to the requesting party in real time prior to any direct contact between the candidate and the employer (Page 90, Lines 14-21; Fig. 12, Ref. No. 1210).

Independent Claim 14 is directed to a distributed network for facilitating the exchange of contact information between at least one of a plurality of candidates and at least one of a

Monster Worldwide, Inc. Exhibit 1010 (p.60/1328)

plurality of employers (Page 20, Line 20 to Page 21, Line 1; Page 21, Lines 9-13; Fig. 12, Ref. Nos. 1206, 1208, 1209, 1210), the candidate having one or more candidate attributes including candidate minimum requirements (Page 41, Line 22 to Page 42, Line 11; Page 55, Lines 2-5; Page 56, Lines 6-17; Fig. 2, Ref. No. 204; Fig. 3, Ref. Nos. 304, 306, 307), and the employer having one or more employer attributes including employer minimum requirements (Page 71, Line 20 to Page 72, Line 21; Page 74, Lines 13-16; Fig. 8, Ref. Nos. 808, 823, 824, 825, 826). The distributed network further includes means for managing enterprise data resources. This means is identified in the specification at Page 24, Line 20 to Page 25, Line 19; Page 33, Lines 3-9; Page 100, Lines 1-8; Fig. 2, Ref. Nos. 213-224; Fig. 3, Ref. No. 309. The distributed network further includes means for storing the candidate attributes and requirements in the candidate database and means for providing at least a portion of the candidate database to be searched by the candidate and employer. This means is identified in the specification at Page 35, Lines 7-15; Page 36, Line 21 to Page 37, Line 5; Page 41, Line 22 to Page 42, Line 11; Page 44, Line 13 to Page 45, Line 12; Page 46, Lines 5-23; Page 48, Lines 19-24; Page 100, Lines 1-8; Fig. 2, Ref. Nos. 204, 205, 213-224; Fig. 3, Ref. No. 309. The distributed network further includes means for storing the employer attributes and requirements in an employer database and means for providing at least a portion of the employer database to be searched by the candidate and employer. This means is identified in the specification at Page 40, Lines 9-21; Page 43, Lines 10-16; Page 44, Line 13 to Page 45, Line 12; Page 46, Lines 5-23; Page 48, Lines 19-24; Page 49, Lines 3-12; Page 100, Lines 1-8; Fig. 2, Ref. Nos. 210, 211, 213-224; Fig. 3, Ref. No. 309. The distributed network further includes means for receiving a search request from either the candidate or the employer to search the searchable portion of one of the candidate and employer databases for a possible employment opportunity based upon certain search parameters. This

Monster Worldwide, Inc. Exhibit 1010 (p.61/1328)

means is programmable software and is identified in Fig. 2, Ref. Nos. 206, 212; Fig. 3, Ref. No. 303. The distributed network further includes means for processing the search request and providing the results thereof to the requesting one of the candidate and employer. This means is programmable software and is identified in Fig. 4, Ref. Nos. 401, 409; Fig. 8, Ref. No. 803; Fig. 10, Ref. Nos. 1003, 1004, 1006, 1008, 1009, 1010. The distributed network further includes means for receiving a request for release of contact information from the requesting one of the candidate and employer based upon the search results. This means is programmable software and is identified in Fig. 11, Ref. Nos. 1101, 1103; Fig. 12, Ref. No. 1206. The distributed network further includes means for determining that the attributes of the requesting one of the candidate and the employer satisfy the minimum requirements of the non-requesting candidate or employer. This means is programmable software and is identified in Fig. 4, Ref. No. 417; Fig. 10, Ref. No. 1017. The distributed network further includes means for determining that there is mutual consent for the release of contact information regarding the candidate. This means is programmable software and is identified in Fig. 11, Ref. No. 1108; Fig. 12, Ref. No. 1208. The distributed network further includes means for computing a payment fee to the career site operator in real time based on the mutual consent for the release of contact information. This means is identified in the specification at Page 16, Line 22 to Page 17, Line 11; Fig. 12, Ref. No. 1211. The distributed network further includes means for obligating the payment fee in real time to the career site operator. The means is identified in the specification at Page 90, Lines 14-19; Fig. 12, Ref. No. 1211. The distributed network further includes means for collecting the payment fee in real time. This means is identified in the specification at Page 91, Lines 1-9; Fig. 12, Ref. No. 1212. The distributed network further includes means for providing the exchange of contact information in real time prior to any direct contact between the candidate and the

Monster Worldwide, Inc. Exhibit 1010 (p.62/1328)

employer. This means is identified in the specification at Page 22, Lines 6-8; Fig. 12, Ref. No. 1213.

Dependent Claim 17 is dependent directly upon independent claim 14 and further defines the means for determining that there is mutual consent. More specifically, claim 17 further requires that the means for determining that there is mutual consent include means for receiving a response to the request for release of contact information from the non-requesting one of the candidate and the employer. This means is again programmable software and is identified in Fig. 2, Ref. Nos. 325, 326; Fig. 8, Ref. Nos. 831, 832; Fig. 11, Ref. Nos. 1101, 1103, 1105, 1108; Fig. 12, Ref. Nos. 1201, 1206, 1208.

Dependent Claim 205 is both merely objected to (See, Final Office Action, Page 7, Paragraph 7) and rejected under 35 U.S.C. §103(a)) (See, Final Office Action, Page 7, first full paragraph). Dependent Claim 205 is dependent directly upon Claim 5 and adds additional method steps to the method of Claim 5. More particularly, dependent Claim 205 requires a determination to be made before processing the search request as to whether the requesting one of the candidate and employer was previously requested to provide a response to a request for release of contact information and, if it is determined that either the employer or the candidate was previously requested to provide a response to a request for release of contact information and no response was received, then precluding the non-responding employer or candidate from further interaction with the system until a response is provided (Page 56, Line 20 to Page 57, Line 3; Fig. 3, Ref. Nos. 336, 337; Page 74, Lines 13-20; Fig. 8, Ref. Nos. 831, 832).

Dependent Claim 208 is dependent directly upon claim 5 and adds additional method steps to the method of Claim 5. More particularly, dependent claim 208 requires that if the attributes of the requesting one of the candidate and employer do not satisfy the minimum

Monster Worldwide, Inc. Exhibit 1010 (p.63/1328)

requirements of the non-requesting candidate or employer, then the present method will communicate to the requesting one of the candidate and employer that at least one attribute of the requesting party does not satisfy the minimum requirements of the non-requesting party (Page 19, Line 10 to Page 20, Line 15; Page 84, Line 16 to Page 85, Line 8; Fig. 4, Ref. Nos. 417, 418, 419; Fig. 10, Ref. Nos. 1017, 1018, 1019). The method further includes offering the opportunity to the requesting one of the candidate and employer to change its at least one non-satisfying attribute so as to satisfy the minimum requirements of the non-requesting party (Page 19, Line 10 to Page 20, Line 15; Page 84, Line 16 to Page 85, Line 8; Fig. 4, Ref. Nos. 417, 418, 419; Fig. 10, Ref. Nos. 1017, 1018, 1019). Still further, in accordance with the method of claim 208, if the requesting one of the candidate and employer changes its at least one non-satisfying attribute so as to satisfy the minimum requirements of the non-requesting party, then the present method then waits to receive a response from the non-requesting candidate or employer consenting to the release of the contact information of the candidate to the employer (Page 19, Line 10 to Page 20, Line 15; Page 84, Line 16 to Page 85, Line 8; Fig. 4, Ref. Nos. 417, 418, 419; Fig. 10, Ref. Nos. 1017, 1018, 1019).

Independent Claim 209 is directed to a method for operating a computer system for authorizing information exchange between at least one of a plurality of candidates in at least one of a plurality of employers prior to any direct contact between the candidate and the employer (Page 20, Line 20 to Page 21, Line 1; Page 21, Lines 9-13; Fig. 12, Ref. Nos. 1206, 1208, 1209, 1210). The candidate will have one or more attributes including candidate minimum requirements (Page 41, Line 22 to Page 42, Line 11; Page 55, Lines 2-5; Page 56, Lines 6-17; Fig. 2, Ref. No. 204; Fig. 3, Ref. Nos. 304, 306, 307), and the employer will have one or more attributes including employer minimum requirements (Page 71, Line 20 to Page 72, Line 21;

Monster Worldwide, Inc. Exhibit 1010 (p.64/1328)

Page 74, Lines 13-16; Fig. 8, Ref. Nos. 808, 823, 824, 825, 826). The present method includes storing the candidate attributes and requirements in a candidate database (Page 22, Line 15 to Page 24, Line 19; Page 27, Lines 1-3; Fig. 2, Ref. Nos. 213-224; Fig. 3, Ref. No. 309); storing the employer attributes and requirements in an employer database (Page 17, Line 20 to Page 18, Line 5; Page 43, Lines 10-16; Page 71, Line 16 to Page 72, Line 21; Page 74, Lines 8-12; Fig. 8, Ref. No. 808); and establishing a portion of the employer database to be searchable by the candidate (Page 41, Lines 16-19; Page 42, Lines 9-11; Page 53, Line 11 to Page 54, Line 6; Page 70, Lines 4-23; Page 72, Lines 18-20; Page 74, Lines 8-12; Fig. 2, Ref. Nos. 210, 212; Fig. 8, Ref. Nos. 808, 823, 824, 825, 826). The present method further includes receiving a search request from a candidate to search the searchable portion of the employer database for a possible employment opportunity based upon certain search parameters (Page 19, Lines 10-15; Page 28, Lines 1-2; Page 41, Lines 9-15; Page 42, Lines 12-19; Page 43, Lines 21-23; Page 49, Lines 15-20; Fig. 2, Ref. Nos. 206, 212). Once the search request is received, the method processes the search request and provides the results to the requesting candidate (Page 19, Line 5 to Page 20, Line 15; Page 75, Line 21 to Page 83, Line 13; Fig. 4, Ref. Nos. 401, 409; Fig. 10, Ref. Nos. 1003, 1004, 1006, 1008, 1009, 1010). The method then waits to receive a request from the candidate to submit the candidate's contact information to at least one employer based upon the search results (Page 62, Lines 10-18; Page 83, Line 21 to Page 84, Line 4; Fig. 4, Ref. No. 414; Fig. 10, Ref. Nos. 1011, 1014). When this request is received, the present method determines whether the attributes of the candidate satisfy the minimum requirements of the at least one employer (Page 19, Line 16 to Page 20, Line 15; Page 62, Lines 19-23; Page 63, Lines 1-18; Fig. 4, Ref. No. 417; Fig. 10, Ref. No. 1017; Fig. 7A, Ref. Nos. 702, 706; Fig. 7B, Ref. Nos. 752, 756). If the minimum requirements are met, the method then waits to receive a response from

Monster Worldwide, Inc. Exhibit 1010 (p.65/1328)

the at least one employer that it desires to receive the contact information of the candidate (Page 20, Line 16 to Page 21, Line 20; Page 75, Lines 1-7; Page 84, Lines 1-3; Page 88, Line 20 to Page 90, Line 11; Fig. 11, Ref. Nos. 1103, 1105, 1108; Fig. 12, Ref. Nos. 1201, 1206). For each specific response received from the employer acknowledging or consenting to the receipt of contact information of the candidate, the present method obligates a payment due in real time to the employer based upon the employer's consent to receive the contact information of the candidate wherein the payment due is a fee to a career site operator (Page 16, Line 16 to Page 17, Line 11; Page 90, Lines 14-19; Fig. 12, Ref. Nos. 1210, 1211, 1212, 1213), and thereafter the method provides the exchange of contact information in real time between the candidate and the at least one employer (Page 90, Lines 14-21; Fig. 12, Ref. No. 1210).

Independent Claim 214 is directed to a method for operating a computer system for authorizing information exchange between at least one of a plurality of candidates and at least one of a plurality of employers prior to any direct contact between the candidate and the employer (Page 20, Line 20 to Page 21, Line 1; Page 21, Lines 9-13; Fig. 12, Ref. Nos. 1206, 1208, 1209, 1210). The candidate will likewise have one or more candidate attributes, including candidate minimum requirements (Page 41, Line 22 to Page 42, Line 11; Page 55, Lines 2-5; Page 56, Lines 6-17; Fig. 2, Ref. No. 204; Fig. 3, Ref. Nos. 304, 306, 307), and the employer will likewise have one or more employer attributes, including employer minimum requirements (Page 71, Line 20 to Page 72, Line 21; Page 74, Lines 13-16; Fig. 8, Ref. Nos. 808, 823, 824, 825, 826). This method includes storing the candidate attributes and requirements in a candidate database (Page 22, Line 15 to Page 24, Line 19; Page 27, Lines 1-3; Fig. 2, Ref. Nos. 213-224; Fig. 3, Ref. No. 309); storing the employer attributes and requirements in an employer database (Page 17, Line 20 to Page 18, Line 5; Page 43, Lines 10-16; Page 71, Line 16 to Page 72, Line

21; Page 74, Lines 8-12; Fig. 8, Ref. No. 808); and establishing a portion of the candidate database to be searchable by the employer (Page 18, Lines 15-21; Page 22, Lines 20-23; Page 42, Lines 9-11; Page 55, Lines 21-23; Page 56, Lines 15-17; Fig. 2, Ref. Nos. 213-224; Fig. 3, Ref. No. 309). The present method further includes receiving a search request from an employer to search the searchable portion of the candidate database for a possible employment opportunity based upon certain search parameters (Page 19, Lines 10-15; Page 28, Lines 1-2; Page 41, Lines 9-15; Page 42, Lines 12-19; Page 43, Lines 21-23; Page 49, Lines 15-20; Fig. 2, Ref. Nos. 206, 212). Once the search request is received, the method processes the search request and provides the search results to the requesting employer (Page 19, Line 5 to Page 20, Line 15; Page 75, Line 21 to Page 83, Line 13; Fig. 4, Ref. Nos. 401, 409; Fig. 10, Ref. Nos. 1003, 1004, 1006, 1008, 1009, 1010). The method then waits to receive a request from the employer for release of contact information of at least one candidate based upon the search results (Page 62, Lines 10-18; Page 83, Line 21 to Page 84, Line 4; Fig. 4, Ref. No. 414; Fig. 10, Ref. Nos. 1011, 1014). When this request is received, the present method determines whether the attributes of the employer satisfy the minimum requirements of the at least one candidate (Page 19, Line 16 to Page 20, Line 15; Page 62, Lines 19-23; Page 63, Lines 1-18; Fig. 4, Ref. No. 417; Fig. 10, Ref. No. 1017; Fig. 7A, Ref. Nos. 702, 706; Fig. 7B, Ref. Nos. 752, 756). If the minimum requirements are met, the method then waits to receive a response from the at least one candidate that the candidate desires to release the contact information to the employer (Page 20, Line 16 to Page 21, Line 20; Page 75, Lines 1-7; Page 84, Lines 1-3; Page 88, Line 20 to Page 90, Line 11; Fig. 11, Ref. Nos. 1103, 1105, 1108; Fig. 12, Ref. Nos. 1201, 1206). For each specific response received from the candidate acknowledging or consenting to the release of contact information, the present method obligates a payment due from the employer in real time based on the at least

Monster Worldwide, Inc. Exhibit 1010 (p.67/1328)

one candidate's consent for release of contact information wherein the payment due is a fee to a career site operator (Page 16, Line 16 to Page 17, Line 11; Page 90, Lines 14-19; Fig. 12, Ref. Nos. 1210, 1211, 1212, 1213). Once payment is obligated, the present method then provides the exchange of contact information in real time between the at least one candidate and the employer (Page 90, Lines 14-21; Fig. 12, Ref. No. 1210).

Independent Claim 221 is directed to a computer system (Page 14, Lines 9-20; Fig. 1, Ref. Nos. 110, 120, 140) for coordinating information exchange between at least one of a plurality of candidates and at least one of a plurality of employers prior to any direct contact between a candidate and an employer (Page 20, Line 20 to Page 21, Line 1; Page 21, Lines 9-13; Fig. 12, Ref. Nos. 1206, 1208, 1209, 1210). The candidate will have one or more candidate attributes, including candidate minimum requirements (Page 41, Line 22 to Page 42, Line 11; Page 55, Lines 2-5; Page 56, Lines 6-17; Fig. 2, Ref. No. 204; Fig. 3, Ref. Nos. 304, 306, 307), and the employer will have one or more employer attributes, including employer minimum requirements (Page 71, Line 20 to Page 72, Line 21; Page 74, Lines 13-16; Fig. 8, Ref. Nos. 808, 823, 824, 825, 826). The computer system includes a processor (Page 14, Lines 9-20; Fig. 1, Ref. Nos. 110, 140); memory connected to the processor (Page 16, Lines 7-10; Fig. 1, Ref. Nos. 110, 140); at least one program (Figs. 3-14) for controlling the operation of the processor (Page 14, Line 9 to Page 15, Lines 2: fig. 1, Ref. Nos. 110,140); and an interface operable to communicate with the candidate and the employer (Page 14, Line 9 to Page 15, Line 23: Fig. 1, Ref. Nos. 110, 120). The processor is operable with the memory and with the at least one program (Page 14, Line 9 to Page 16, Line 10; Fig. 1, Ref. Nos. 110, 120, 140) to store the candidate attributes and requirements in a candidate database (Page 22, Line 15 to Page 24, Line 19; Page 27, Lines 1-3; Fig. 2, Ref. Nos. 213-224; Fig. 3, Ref. No. 309); to store the employer

Monster Worldwide, Inc. Exhibit 1010 (p.68/1328)

attributes and requirements in an employer database (Page 17, Line 20 to Page 18, Line 5; Page 43, Lines 10-16; Page 71, Line 16 to Page 72, Line 21; Page 74, Lines 8-12; Fig. 8, Ref. No. 808); to establish a searchable portion of both the candidate and employer databases (Page 18, Lines 15-21; Page 22, Lines 20-23; Page 41, Lines 16-19; Page 42, Lines 9-11; Page 53, Line 11 to Page 54, Line 6; Page 55, Lines 21-23; Page 56, Lines 15-17; Page 70, Lines 4-23; Page 72, Line 18-20; Page 74, Lines 8-12); and to receive search requests from either the candidate or the employer to search the searchable portion of one of the candidate and employer databases for a possible employment opportunity (Page 19, Lines 10-15; Page 28, Lines 1-2; Page 41, Lines 9-15; Page 42, Lines 12-19; Page 43, Lines 21-23; Page 49, Lines 15-20; Fig. 2, Ref. Nos. 206, 212). The processor is also operable to process the search request and provide the results of the search to the requesting party (Page 19, Line 5 to Page 20, Line 15; Page 75, Line 21 to Page 83, Line 13; Fig. 4, Ref. Nos. 401, 409; Fig. 10, Ref. Nos. 1003, 1004, 1006, 1008, 1009, 1010); to receive a request for release of contact information from the requesting candidate or employer based upon the search results (Page 62, Lines 10-18; Page 83, Line 21 to Page 84, Line 4; Fig. 4, Ref. No. 414; Fig. 10, Ref. Nos. 1011, 1014); and to determine whether the attributes of the requesting candidate or employer satisfy the minimum requirements of the non-requesting candidate or employer stored in the candidate or employer database (Page 19, Line 16 to Page 20, Line 15; Page 62, Lines 19-23; Page 63, Lines 1-18; Fig. 4, Ref. No. 417; Fig. 10, Ref. No. 1017; Fig. 7A, Ref. Nos. 702, 706; Fig. 7B, Ref. Nos. 752, 756). The processor is further operative to determine whether there is mutual consent for the release of contact information regarding the candidate (Page 20, Line 16 to Page 21, Line 20; Page 75, Lines 1-7; Page 84, Lines 1-3; Page 88, Line 20 to Page 90, Line 11; Fig. 11, Ref. Nos. 1103, 1105, 1108; Fig. 12, Ref. Nos. 1201, 1206) and to obligate a payment due from the employer in real time based on the

mutual consent for release of contact information wherein the payment fee is due to a career site operator (Page 16, Line 16 to Page 17, Line 11; Page 90, Lines 14-19; Fig. 12, Ref. Nos. 1210, 1211, 1212, 1213). Once payment is obligated, the processor is further operative to provide the exchange of contact information in real time prior to any real direct contact between the candidate and the employer (Page 90, Lines 14-21; Fig. 12, Ref. No. 1210).

Dependent Claim 223 is dependent upon independent Claim 221 and further includes adding a payment interface to the system operable to receive payment in real time from the employer (Page 92, Lines 1-9; Fig. 12, Ref. Nos. 208, 211, 212, 213). Claim 223 further requires that the processor be operable to receive payment in real time from the employer through the payment interface based upon the occurrence of mutual consent (Paragraph 14, Line 9 to Page 16, Line 10; Fig. 1, Ref. Nos. 110, 120, 140).

6. GROUNDS OF REJECTION TO BE REVIEWED ON APPEAL

Whether Claims 5, 6 and 10 are unpatentable under 35 U.S.C. §112, second paragraph, as being indefinite for failing to particularly point out and distinctly claim the subject matter of the invention based upon use of the term "said requesting party".

Whether Claim 208 is unpatentable under 35 U.S.C. §112, second paragraph, as being indefinite for failing to particularly point out and distinctly claim the subject matter of the invention based upon use of the term "the opportunity".

Whether Claims 5, 6, 10, 200 and 204 are unpatentable under 35 U.S.C. §103(a) over Walker in view of Pineda and in further view of Phatak.

Whether Claim 14 is unpatentable under 35 U.S.C. §103(a) over Walker in view of Pineda and in further view of Phatak.

Whether Claim 17 is unpatentable under 35 U.S.C. §103(a) over Walker in view of Pineda and in further view of Phatak.

Whether Claim 209 is unpatentable under 35 U.S.C. §103(a) over Walker in view of Pineda and in further view of Phatak.

Whether Claim 214 is unpatentable under 35 U.S.C. §103(a) over Walker in view of Pineda and in further view of Phatak.

Whether Claim 221 is unpatentable under 35 U.S.C. §103(a) over Walker in view of Pineda and in further view of Phatak.

Whether Claim 223 is unpatentable under 35 U.S.C. §103(a) over Walker in view of Pineda and further view of Phatak.

Monster Worldwide, Inc. Exhibit 1010 (p.71/1328)

7. THE RELEVANT LAW

A finding of obviousness must be based on four underlying factual determinations:

(1) The scope and content of the prior art;

(2) The differences between the prior art and the claimed invention;

(3) The level of ordinary skill in the art; and

(4) Objective considerations of non-obviousness such as commercial success, long felt but unmet need, failure of others to make the invention, and the like. See *Graham v. John Deere Co.*, 148 U.S.P.Q. 459 (1966). Failure to make these determinations precludes the making of a prima facie case of obviousness.

The Patent Office must make the necessary findings and provide an administrative record showing the evidence on which its findings are based and its reasoning in reaching its conclusion. See *In re Zurko,* 258 F.3d 1379, 59 U.S.P.Q.2d 1693, 1697 (Fed. Cir. 2001). When patentability turns on the question of obviousness, the search for and analysis of the prior art must include evidence relevant to the finding of whether there is a teaching, motivation or suggestion to select and combine the references relied on as evidence of obviousness. See *In re Sang Su Lee,* 277 F.3d 1338, 61 U.S.P.Q.2d 1430 (Fed. Cir. 2002) citing *McGinley v. Franklin Sports, Inc.*, 262 F.3d 1335, 60 U.S.P.Q.2d 1001, 1008 (Fed. Cir. 2001). There must be a reason to combine the references. The reason to combine references must be based on objective evidence of record. A showing of a suggestion, teaching or motivation to combine the prior art references is an essential component of an obviousness holding. *C. R. Bard, Inc. v. M3 Systems, Inc.*, 157 F.3d 1340, 48 U.S.P.Q.2d 1225, 1232 (Fed. Cir. 1998).

Particular findings must be made as to the reason why a skilled artisan with no knowledge of the claimed invention would have selected the components for combination in the manner claimed. *In re Kotzab*, 217 F.3d 1365, 55 U.S.P.Q.2d 1313, 1317 (Fed. Cir. 2000). The Patent Office must identify specifically the principal, known to one of ordinary skill that suggests the claimed combination. *In re Rouffet*, 149 F.3d 1350, 47 U.S.P.Q.2d 1453, 1459 (Fed. Cir. 1998). The Patent Office must explain the reasons why one of ordinary skill in the art would have been motivated to select the references and to combine them to render the claimed invention obvious. Further, the Patent Office can satisfy the burden of showing obviousness of the combination only by showing some objective teaching in the prior art or that knowledge generally available to one of ordinary skill would lead that individual to combine the relevant teachings of the references. See *In re Fritch*, 972 F.2d 1260, 23 U.S.P.Q. 1780, 1783 (Fed. Cir. 1992). The factual question of motivation is material to patentability and cannot be resolved on subjective belief and unknown authority. It is improper, in determining whether a person of ordinary skill would have been led to this combination of references simply to "use that which the inventor taught against the teacher." *W. L. Gore v. Garlock, Inc.*, 721 F.2d 1540, 220 U.S.P.Q. 303, 312-13 ((Fed. Cir. 1983). The Patent Office must examine the relevant data and articulate a satisfactory explanation for its action or position including a rational connection between the facts found and the choice made. *Motor Vehicles Manufactures Association v. State Farm Mutual Automobile Ins. Co.*, 463 U.S. 29, 43 (Sup. Ct. 1983).

Monster Worldwide, Inc. Exhibit 1010 (p.73/1328)

Where a trade off between features is required to produce an invention from a combination of references, motivation to combine requires the tradeoff be desirable not just feasible. See *Winner International Royalty Corp. v. Wang*, 202 F.3d 1340, 53 U.S.P.Q.2d 1580 (Fed. Cir. 2000).

It is improper to apply an obviousness to try standard or indulge in hindsight evaluation or reconstruction. See *Ecolochem, Inc. v. Southern California Edison Co.*, 227 F.3d 1361, 56 U.S.P.Q.2d 1065 (Fed. Cir. 2000).

It has been held that supporting a rejection on common knowledge and common sense is inappropriate. Reference to common knowledge without evidence in support or explanation in support is inappropriate. See *Smiths Industries Medical Systems, Inc. v. Vital Signs, Inc.*, 1836 F.3d 1347, 51 U.S.P.Q.2d 1415, 1421 (Fed. Cir. 1999). Failure to articulate an appropriate reason for the rejection is fatal to the position of obviousness. The Patent Office cannot merely make conclusory statements when dealing with particular combinations of prior art but must set forth the rationale on which it relies. *In re Sang Su Lee*, supra. Thus, it is improper to state a combination is within ordinary skill in the art without support.

An appropriate analysis in the determination of obviousness may not indulge in the forbidden hindsight evaluation. "Our case law makes clear that the best defense against the subtle but powerful attraction of a hindsight-based obviousness analysis is rigorous application of the requirement for a showing of the teaching or motivation to combine prior art references. *In re Dembiczak,* 175 F.3d 994, 50 U.S.P.Q.2d 1614, 1617 (Fed. Cir. 1999). It has also been held that teachings of references can be combined only if there is some suggestion or incentive to do

so. See *ACS Hosp. Sys., Inc. v. Montefiore Hosp.*, 732 F.2d 1572, 221 U.S.P.Q. 929, 933 (Fed. Cir. 1984).

Reasoned findings are critical to the performance of an agency's functions and judicial reliance on agency findings. Absent reasoned findings based on substantial evidence, effective review would become lost in the haze of so called expertise. See *Baltimore and Ohio Railroad Co., v. Aberdeen & Rockfish Railroad Co.*, 393 U.S. 87, 91-92 (Sup. Ct. 1968).

Another important consideration in the determination of obviousness is who is one of ordinary skill in the art and what is the level of ordinary skill in the art. One cannot determine if an invention would have been obvious to one of ordinary skill in the art without determining who that person would be. Several factors are evaluated to determine the level of ordinary skill. Those factors include: 1) the types of problems encountered in the art; 2) the prior art solution to those problems; 3) the rapidity of innovation; 4) the sophistication of the technology; and 5) the educational level of active workers in the field. See *Ruiz v. A.B. Chance Co.*, 234 F.3d 654, 57 U.S.P.Q.2d 1162 (Fed. Cir. 2000).

The Examiner must review all prior art even that art which will not support the rejection. See Section 706 *MPEP* and *Panduit Corp. v. Dennison Mfg. Co.,* 774 F.2d 1082, (Fed. Cir. 1985). Further, the Patent Office cannot pick and choose between references or teachings in references. See *In re Wesslau,* 353 F.2d 238 (CCPA 1965). See also *Dennison Mfg. Co. v. Panduit Corp.,* 475 U.S. 809, 106 S.C.T. 1578, 89L.Ed. 2 D 817 (S.CT. 1986).

The court in *Gillette Company v. S.C. Johnson & Son, Inc.,* 919 F.2d 720 (Fed. Cir. 1990) held that it is improper to focus on the obviousness of substitutions and differences instead of on

Monster Worldwide, Inc. Exhibit 1010 (p.75/1328)

the invention as a whole. The court also held that obvious to try is not the appropriate standard, that the disclosure must contain a sufficient teaching of how to obtain the desired result or that the claimed results would be obtained if certain directions were pursued. Obviousness to try is not the appropriate standard under 35 U.S.C. 103.

The Federal Circuit has also held in *In re Peterson,* 315 F.3d 1325 (Fed. Cir. 2003), that an applicant may rebut a prima facie case of obviousness by showing that the prior art teaches away from the claimed invention in any material respect. See, also, *In re Geisler,* 116 F.3d at page 1469 (Fed. Cir. 1997) and *In re Malagari,* 499 F.2d at page 1333 (CCPA 1974).

See, also, MPEP §§ 2142, 2143, 2144 and 2145.

8. ARGUMENTS

Claims 5, 6, 10, 14, 17, 200, 204, 205, 208, 209, 214, 221 and 223 are on appeal. In accordance with the Final Office Action dated November 8, 2006, the appealed claims have been rejected on the following basis.

35 U.S.C. §103 Rejections

Claims 5-8, 10-12, 14, 15, 17, 200, 204, 205, 209, 214, 221 and 223 stand rejected under 35 U.S.C. §103(a) as being unpatentable over Walker et al U.S. Patent No. 5,884,270 (the Walker reference) in view of Pineda et al International Publication No. WO01/82158 A2 (the Pineda reference) and further in view of Phatak U.S. Patent Application Publication No. US2001/0042038 A1 (The Phatak reference). The Phatak reference was newly cited in the Final Office Action.

35 U.S.C. §112 Rejections

Claims 5, 6, 10 and 208 stand rejected under 35 U.S.C. §112, second paragraph, as being indefinite for failing to particularly point out and distinctly claim the subject matter which Applicant regards as the invention. Claims 5, 6 and 10 stand rejected as being indefinite with respect to the recitation of the limitation "said requesting party" in independent Claim 5, and Claim 208 stands rejected as being indefinite with respect to the recitation of the phrase "the opportunity" as used in said claim.

Applicant's Summary Position

Except for Claim 208 which stands rejected solely on the basis of 35 U.S.C. §112, the Examiner has taken the position that all of the remaining appealed claims would be obvious to a person skilled in the art based upon the disclosures in 3 separate prior art references, namely, the

Monster Worldwide, Inc. Exhibit 1010 (p.77/1328)

Walker, Pineda and Phatak references as hereinafter further explained in detail below. The obviousness rejections must be reversed, among other things, for the following reasons: (1) several limitations associated with each independent claim on appeal are not disclosed, taught or even suggested by the prior art references; (2) the prior art teaches away from several claimed elements associated with the claims on appeal; (3) the Examiner has not established a Prima Facie case of obviousness pursuant to MPE §2143 in that besides the prior art teaching away from some of the claimed limitations, there is no suggestion or motivation in the prior art to modify the references or to combine such reference teachings in the manner as proposed by the Examiner, and (4) the reasonable expectation of success of such combination is not found in the prior art. See, *In Re Vaeck*, 947 F.2d 488, 20 USPQ 2d 1438 (Fed. Cir. 1991). Instead, the Examiner is using hindsight and Applicant's disclosure to establish the obviousness argument. The very fact that the claim invention is within the capabilities of one of ordinary skill in the art is not sufficient by itself to establish Prima Facie obviousness. There must be some objective reason to combine the teachings of the references.

A brief summary of each of the cited prior art references is provided below as well as a detailed discussion of such references as applied to each of the appealed claims.

The Cited Walker Reference

The Walker reference discloses a system for controlling the release of confidential or sensitive information of at least one of the parties involved in an anonymous communication. This control and anonymity is accomplished in several ways, for example, by encrypting communications between the parties; by establishing a communications channel between the party and requestor while not revealing the identity of the party and/or requestor to each other; and, importantly, by establishing first party and second party rules which must be met before

Monster Worldwide, Inc. Exhibit 1010 (p.78/1328)

releasing the identity of either party. See, Column 4, Lines 35-37, 63-66; Column 5, Lines 5-30; Column 7, Lines 23-30; Column 8, Lines 7-15; Column 9, Lines 6-22; Fig. 5, 530; Fig. 8. The Walker system receives from a first party first data including the identity of the first party and it also receives at least two first party rules for releasing the first data including a rule for releasing the identity of the first party. Similar information is gathered from the second party including receiving from the second party at least two second party rules for releasing the second party data including a rule for releasing the identity of the second party. The Walker system is then operative to transmit the identity of the first party to the second party based upon satisfying the first party rule for releasing the identity of the first party and upon satisfying the second party rule for releasing the identity of the second party. This release of contact information is controlled by the central controller 200 and does not require receiving a response from either the first party or the second party during the process if the first and second party rules are met. Instead, if the first and second party rules are met, the central controller will automatically release the search results and if the first and second party rules for releasing the identity of those parties are likewise met, the central controller 200 will automatically release the identity of the first and second parties. See, Column 8, Lines 27-31 and Lines 41-49; Column 8, Line 61 to Column 9, Line 5. This method and procedure is clearly set forth in Claim 1 of the Walker reference.

The mutual agreement between the parties as to the release of contact information in the Walker method is therefore based solely upon pre-determined rules which are entered into the central controller by each of the respective parties. The mutual consent is based upon the pre-determined first and second party rules for releasing such information. In fact, all of the independent claims of the Walker reference require the establishment of first and second party

rules for releasing the identity of each respective party. The Examiner's cite to Walker, Column 7, Lines 24-41 supports this pre-authorized release of contact information through the use of first and second party rules. This is totally different from Applicant's invention wherein an affirmative response is required from the non-requesting party for each request for the release of contact information as will be hereinafter further explained.

The Walker method and system also allows the first and second parties to communicate directly with each other in an anonymous fashion. This is verified by the Examiner's cite to Walker, Column 21, Line 58 through Column 22, Line 9. This is totally different from Applicant's invention wherein no direct contact between the candidate and the employer, or between the first and second party, occurs until after there has been an exchange of contact information.

Also, importantly, as indicated by the Examiner in the outstanding Office Action, the Walker reference does not disclose obligating payment due from an employer in real time to a career site operator. Instead, the Examiner relies upon the Pineda reference for this claimed feature.

The Cited Pineda Reference

The Pineda reference discloses a method for matching which allows a candidate to enter profile data, including identification data, and to match their criteria and then view available job postings. The system further allows an employer to search profile data corresponding to a plurality of candidates and returns search results corresponding to candidates who match the search criteria. After search results have been displayed, the employer can review certain portions of each candidate's profile data and the employer can then authorize a payment for each candidate for whom the employer would like to receive the identification data so that they can

Monster Worldwide, Inc. Exhibit 1010 (p.80/1328)

make contact with the candidate through their normal hiring process. This system again does not require mutual consent between the candidate and employer for each specific request and the release of contact information is automatic once the employer authorizes payment. See, Page 12, Line 14 to Page 13, Line; Page 18, Lines 3-23. No response from the non-requesting party is necessary to release the contact information of that party. It is payment of the fee by the employer which unlocks the identification and contact data. In fact, all of the independent claims of the Pineda reference require providing the employer with the requested identification data based upon receiving a request from the employer for such identification data and charging a fee to the employer for such data. See, Claims 1, 10, 12, 14 and 21. Only the employer in Pineda is asked regarding the release of contact information. As set forth and explained in more detail below, the Pineda employment system and method, among other things, does not obtain mutual consent from both the candidate and the employer for the release of contact information; and it does not check the attributes of the requesting party against the minimum requirements of the non-requesting party.

The Cited Phatak Reference

The Phatak reference discloses a method and system for selecting a resource wherein the system rates the candidates on their overall fitness to fill certain positions taking into consideration their skills, availability, salary and other factors. The Phatak system is an auction type system wherein offers are received to provide candidate resources to fill certain resource requirements in an auction environment. The auction system uses a rating algorithm to identify how closely each candidate matches the job requirements. See, Paragraph 0026. When the auction is closed, the auction system notifies the employer of those candidates with the highest ratings. The employer can then use a web-based interview system to arrange an interview with

Monster Worldwide, Inc. Exhibit 1010 (p.81/1328)

the candidates. Employers input their job requirements and can identify specific attributes associated with a candidate of choice and these qualifications and attributes are submitted in bid form. The employer enters various weight factors associated with each attribute, which weight factors are used to identify relative importance of the factors in the calculation of the match rating. See, Paragraph 0028. Based upon the number of bids provided to the system for available candidates, the Phatak system generates a match rating between the candidate attributes and the target attributes of the particular job requirements and selects candidates based on the generated match ratings. Although the Phatak system looks at maximum and minimum requirements set by the employer for a particular job position, it merely rates the candidate attributes as compared to the job requirements. See, Paragraphs 0027, 0042 to 0054, and Figs. 6B and 14-19. It does not determine if the attributes of the candidates satisfy the minimum requirements of the employer and, importantly, it makes no determination as to whether any of the attributes of the employer or job requirements satisfy minimum requirements of the candidate. Only providers, such as employment agencies, submit bids and the candidate itself does not participate in this auction process. See, paragraph 0033 and 0035. Candidates are not directly involved in the Phatak system and, as a result, there is no direct exchange of information between the candidate and employer. Also, importantly, the Phatak system always generates a match rating regardless of whether the candidate attributes satisfy the job requirements. See, Paragraphs 0026 and 0042. This is not true of the present invention wherein if the attributes of either one of the requesting candidate or employer does not satisfy the minimum requirements of the non-requesting candidate or employer, no release of contact information occurs. The Phatak system makes no comparison or determination as to whether the minimum requirements of the candidate are satisfied by the employer.

Monster Worldwide, Inc. Exhibit 1010 (p.82/1328)

Rejection of Claims 5, 6 and 10 Under 35 U.S.C. §112

Claims 5, 6 and 10 stand rejected under 35 U.S.C. §112 as being indefinite with respect to the recitation of the limitation "said requesting party" in independent claim 5. It is respectfully submitted that claim 5 is not indefinite based upon the language "said requesting party" as claim 5 specifically sets forth receiving a search request from either the candidate or the employer and specifically refers to receiving at least one request for release of contact information from the requesting one of said candidate and said employer. Independent claim 5 is therefore very clear as to one of either the candidate or the employer requesting a search and either one of the candidate or employer requesting the release of contact information. As a result, since only one of the two parties in claim 5 is requesting the release of contact information, such party is the requesting party and such party is one of either the candidate or the employer. In fact, claim 5 specifically addresses determining that the attributes of the requesting one of said candidate and said employer satisfy the minimum requirements of a non-requesting candidate or employer. As a result, independent claim 5 clearly establishes both a requesting and a non-requesting party and the use of the term "said requesting party" in one limitation of claim 5 has proper antecedent basis when the entire claim is taken into context. Although this rejection is easily correctible and Applicant would be glad to replace the language "said requesting party" with new language - - - "said requesting candidate or employer" - - -, Applicant believes that the language of claim 5 is proper and does provide antecedent basis for this limitation.

Claims 6 and 10 depend from independent claim 5 and are rejected under 35 U.S.C. §112 based upon the same rationale relied upon for independent claim 5. The same argument applies to dependent claims 6 and 10.

Monster Worldwide, Inc. Exhibit 1010 (p.83/1328)

Rejection of Claim 208 Under 35 U.S.C. §112

Claim 208 stands rejected solely under 35 U.S.C. §112 as being indefinite with respect to the recitation of the phrase "the opportunity" as used in claim 208. Claim 208 is not indefinite based upon the use of the phrase "the opportunity" when claim 208 is read in its entirety. More specifically, Claim 208 specifically requires that if the attributes of the requesting one of the candidate and employer do not satisfy minimum requirements of the non-requesting candidate or employer, then the present method communicates to the requesting candidate or employer that the at least one attribute of the requesting party does not satisfy the minimum requirements of the non-requesting party. Claim 208 offers the opportunity to the requesting candidate or employer to change its at least one non-satisfying attribute so as to satisfy the minimum requirements of the non-requesting party. The use of the phrase "the opportunity" is taken out of context and should be read in its entirety. Claim 208 is offering the opportunity to change the requesting candidate's or employer's at least one non-satisfying attribute so as to satisfy minimum requirements. The plain reading of claim 208 clearly establishes the meaning of the phrase "the opportunity" and does provide sufficient antecedent basis for the use and understanding of this phrase in claim 208. Also, importantly, claim 208 is substantially identical to claims 210, 215 and 222, all of which claims have been indicated as containing allowable subject matter and all of which claims use the same phrase "the opportunity". Withdrawal of this rejection is respectfully requested.

Rejection of Claims 5, 6, 10, 200 and 204 Under 35 U.S.C. §103

Claims 5, 6, 10, 200 and 204 stands rejected under 35 U.S.C. §103(a) as being unpatentable over Walker (U.S. Patent No. 5,884,270) in view of Pineda (PCT Publication No.

Monster Worldwide, Inc. Exhibit 1010 (p.84/1328)

W001/8218582) and further in view of Phatak (U.S. Patent Application Publication 2001/0042038).

As clearly set forth in Claim 5, the present method requires obtaining attributes and minimum requirements for both the plurality of candidates and the plurality of employers, and that these attributes and minimum requirements be stored in a candidate database and an employer database in a searchable format. Attributes and requirements as applied to candidate and employer profiles are clearly defined in the specification at pages 10, 19, 24, 25, 28, 41, 54, 56, 62, 63 and elsewhere and, although some attributes may be requirements and some requirements may be attributes, these two terms are not synonymous and may include different criteria. Background information associated with candidate-capability attributes is received in a structured format. See, Figs. 2 and 3. Job description information is received from employers in a structured format. See, Figs. 2, 8 and 9.

Once the attributes and minimum requirements of both the candidate and the employer are entered into the appropriate databases, Claim 5 requires receiving a search request from either a candidate or an employer to search the searchable profile of one of the candidate and employer databases for a possible employment opportunity based upon certain search parameters. Once the search request has been processed, the results of the search are provided to the requesting one of either the candidate or the employer. For example, a candidate may request a search for all aerospace engineering jobs in the St. Louis area. The results of this search would be provided to the candidate wherein the job opportunities would be described but the employer's identity and/or contact information associated with each such aerospace engineering job in the St. Louis area would not be released. If the requesting party, in this case the candidate, requests the release of contact information for at least one of the job opportunities found in the

Monster Worldwide, Inc. Exhibit 1010 (p.85/1328)

search, the present method then makes a further determination that the attributes of the requesting party, in this case the candidate, actually satisfy the minimum requirements established by the non-requesting party, in this case the employer, for the specific job identified in the search results and listed in the employer database. In the example given, the employer may require that the candidate have 5 years experience in the industry with specific experience in engine design. According to Claim 5, the present method would therefore take the employer's minimum requirements that an appropriate candidate have 5 years experience in the industry and have engine design experience and search the candidate's attributes to see if the candidate meets these minimum requirements. If the candidate does not satisfy the minimum requirements established by the employer as required by Claim 5, the candidate is then sent a message indicating that the candidate is not qualified for submitting his/her contact information for the employment opportunity requested. This method and procedure is clearly set forth in Figs. 4, 7A and 7B of the present application for the candidate (specification starting at page 57) and in corresponding Fig. 10 for the case where the employer initiates the search request (specification starting at page 75). In the example given above where our candidate does meet the minimum requirements of the employer, Claim 5 then specifically requires that a response must be received from the non-requesting employer consenting to the release of the candidate's contact information to the employer. Clearly, the determining step where the present method determines whether the attributes of the requesting party satisfies the minimum requirements of the non-requesting party is not disclosed in any of the cited prior art references including the Walker, Pineda and Phatak references. Claim 5 requires the affirmative consent of the non-requesting party to the release of the candidate's contact information.

Monster Worldwide, Inc. Exhibit 1010 (p.86/1328)

Walker merely discloses that once the search results have been transmitted, if the first and second party rules for releasing their respective identities are satisfied, the exchange of contact information automatically takes place. There is no further determination with respect to comparing attributes and minimum requirements, nor is there any specific communication with the non-requesting party to receive a specific response from that non-requesting party consenting to the release of contact information. According to the Walker disclosure, consent is automatic if the first and second party rules are satisfied.

The Examiner relies upon Column 5, Lines 5-18 for disclosure in the Walker reference as to receiving a request for release of contact information from either the candidate or the employer and Column 7, Lines 24-41 and Column 21, Line 58, through Column 22, Line 9 of Walker to establish that there is a determination with respect to mutual consent for the release of contact information. The Examiner goes on to state that it is implied in Walker that there must be mutual agreement between the parties before any information is released. A clear and precise reading of Columns 5, 7, 21 and 22 of Walker clearly shows that if the first and second party rules are satisfied, contact information is automatically transmitted. See, Column 5, Lines 23-30; Column 8, Lines 7-14; Column 8, Lines 27-31; Column 8, Lines 41-50; Column 8, Lines 61-65; Column 9, Lines 1-5. This is totally different from what is required in Claim 5 wherein Claim 5 specifically requires receiving a response from non-requesting candidate or employer consenting to the release of contact information. There is no automatic transfer of contact information unless a specific affirmative response is received by the non-requesting party. This is not always true with respect to the Walker reference and this feature of Walker is clearly defined in all of the independent claims of the Walker reference wherein, for example, Claim 1 of the Walker reference, specifically recites that, "upon satisfying said first party rule for releasing said identity

Monster Worldwide, Inc. Exhibit 1010 (p.87/1328)

of said first party, transmitting said identity of said first party to said second party, and after said exchanging step, upon satisfying said second party rule for releasing said identity of said second party, transmitting said identity of said second party to said first party".

Applicant's system as recited in Claim 5 is more sophisticated than the Walker system and it not only transmits the results of the search based upon the search parameters, but it further makes additional determinations that all of the minimum requirements of the non-requesting party are satisfied before requesting mutual consent to the release of contact information. This series of steps is clearly missing from the Walker system and, for this reason alone, the present method as defined in Claim 5 is clearly and patentably distinguishable over the disclosure in the Walker reference.

Still further, the Walker method likewise establishes anonymously direct communications between the parties before the release of contact information. See, Column 7, Lines 25-31; Column 9, Lines 6-22. This teaches directly against the present invention as defined in Claim 5 wherein Claim 5 specifically recites that the authorized exchange of information between candidate and employer occurs prior to any direct contact between said candidate and said employer. Here again, for this reason alone, Claim 5 is again clearly and patentably distinguishable over the disclosure in the Walker reference.

Claim 5 continues to further require obligating a payment due in real time based on the response to the request for release of information wherein the payment is due to a career site operator and thereafter providing the exchange of contact information in real time prior to any direct contact between the candidate and the employer. The Examiner has admitted that the Walker reference fails to expressly disclose obligating payment due from the employer and cites Pineda for the proposition of disclosing charging a fee to an employer. More particularly, Pineda

specifically requires that the employer pay a fee before any release of contact information. See, Page 12 of the Pineda publication starting at Line 25 through Page 13, Lines 1-2 and Lines 16-18. See also, Fig. 4 of Pineda. This is not true with respect to the method of Claim 5 wherein either the candidate or the employer will be obligated a payment due in real time as soon as a positive response is received from the non-requesting party consenting to the release of contact information to the requesting party. In Claim 5, upon receipt of consent to the release of contact information, obligation of the payment is immediately made and the exchange of contact information is thereafter immediately made in real time. This payment sequence in combination with the other steps of Claim 5 clearly and patentably distinguishes Claim 5 over both the Walker reference and the Pineda reference, either alone or in combination with each other.

It is also important to note that the Pineda reference likewise does not require mutual consent between the candidate and the employer for each specific request for contact information; it does not require a specific response from the non-requesting party to release that party's contact information; and the release of contact information is automatic once the employer authorizes payment. It is payment of the fee by the employer which triggers the release of contact information, not mutual consent or an affirmative response from the non-requesting party to release that party's contact information. Still further, there is no disclosure in the Pineda reference with respect to making a determination as to whether the attributes of the requesting party satisfy the minimum requirements of the non-requesting party. As a result, even if the Walker and Pineda references are combined, and even if this Board takes the position that Pineda does disclose obligating a payment based on the response to a request for release of contact information , this combined system still does not disclose, teach or even suggest the key elements of Claim 5, namely, determining that the attributes of the requesting party satisfies

Monster Worldwide, Inc. Exhibit 1010 (p.89/1328)

minimum requirements of the non-requesting party, and receiving an affirmative response from the non-requesting party consenting to the release of contact information to the requesting party in all situations. All of the claims of the Pineda reference clearly disclose and recite that it is only the employer who requests to receive identification data for at least one matched candidate and that payment of a fee is based solely upon the employer's request for contact information and no response from the non-requesting party is required.

Claim 5 specifically requires a separate determination step to ensure that the attributes of the requesting party satisfy the minimum requirements of the non-requesting party; that a very specific response be received from the non-requesting party consenting to the release of contact information (not just an automatic release based upon party rules or based upon payment of a fee by the employer); an immediate obligation of a payment in real time to either party; and the exchange of contact information occurs in real time and, importantly, prior to any direct contact between the candidate and the employer. These are very different and distinguishable steps as compared to both the Walker and Pineda references. For these and other reasons, Claim 5 is clearly and patentably distinguishable over both the Walker and Pineda references, either alone or in combination.

In Paragraph 10 of the Final Office Action dated November 8, 2006, the Examiner states that he disagrees with Applicant's arguments with respect to the Walker reference for the specific reason that the first party and second party are not recited in the rejected claims. It is respectfully submitted that although that Walker reference uses the terms "first party" and "second party", these terms are comparable to Applicant's use of the terms "candidate" and "employer". All of the independent claims on appeal specifically state that there is no direct contact between the candidate (first party) and employer (second party) prior to the release of

Monster Worldwide, Inc. Exhibit 1010 (p.90/1328)

contact information. Applicant does not understand the Examiner's rationale in this regard. Walker allows direct communication between a first party and a second party, namely, between a candidate and an employer, whereas all of the independent claims on appeal specifically recite that there is no direct contact between the candidate and the employer until after there has been an exchange of contact information.

Furthermore, the Examiner admits in the final rejection that the combination of Walker and Pineda fails to explicitly disclose . . . receiving a search request from either said candidate or said employer to search the searchable profile of one or more of the candidate and employer databases for a possible employment opportunity based upon certain parameters, and that the attributes of the requesting one of said candidate and said employer satisfy the minimum requirements of a non-requesting candidate or employer stored in the candidate and employer databases. See, Page 4 of Final Office Action. The Examiner has taken the position that the Phatak reference discloses a method for conducting an auction for resources wherein the Phatak method determines that the attributes of the candidate and the employer satisfy minimum requirements. The Examiner cites to Paragraphs 0035, 0044 and 0045 of the Phatak reference for this disclosure. The Examiner also states that it would have been obvious to a person of ordinary skill in the art to allow an employer to advertise the desired skills of the job candidate along with other attributes.

In brief, the Phatak reference discloses an auction system wherein the resource system receives resource requirements that include target attributes; it receives offers to provide candidate resources to fill the resource requirements in an auction environment; each candidate resource has candidate attributes that specify the characteristics of the candidate resource; and the resource system generates a match rating for each candidate resource that indicates how

Monster Worldwide, Inc. Exhibit 1010 (p.91/1328)

closely the candidate attributes match the target or job requirements. See, Paragraph 0025. The Phatak system then uses the match ratings to select a candidate resource whose candidate attributes best match the target attributes. No mutual consent for release of contact information is associated with the Phatak system; no candidate interaction or other involvement is associated with the Phatak system; and although minimum and maximum requirements are compared, no determination with respect to satisfying minimum requirements is made. Instead, the Phatak auction system uses a rating algorithm to identify how closely each candidate matches the job requirement. See, Paragraph 0026. Only providers, not candidates, submit bids to the Phatak auction system and the candidate itself does not participate at all. See, Paragraphs 0033 and 0035. Therefore, there is no direct exchange of information between the employer and the candidate, and there is nothing approaching a consent that is specific to the transaction. Instead, the candidate is represented by the employment agency which makes the ultimate disclosure decision. Also, importantly, the Phatak system always generates a match rating regardless of whether the candidate attributes satisfy the job requirements. See, Paragraphs 0026 and 0042. There is no determination in the Phatak system as to whether any of the attributes of the employer or the job requirements actually satisfy minimum requirements set by the candidate. It only compares candidate attributes to minimum or maximum job requirements. As a result, not only does the Phatak system not determine that the candidate attributes meet the minimum requirements of the employer, importantly, the Phatak system makes no comparison or determination as to whether the minimum requirements of the candidate are satisfied by the employer. Claim 5 works both ways. Instead, Phatak allows both unsatisfied candidates to be submitted to an employer presumably with a low algorithm score, and it allows the submission of candidates to unqualified employers.

Monster Worldwide, Inc. Exhibit 1010 (p.92/1328)

The Examiner refers to Paragraph 0044 and 0045 of Phatak. These paragraphs refer to Fig. 15 which is merely a flow diagram illustrating one example of how a calculation for the skills of a candidate is made. Here again, although skill requirements are compared, only a match rating is generated to identify how closely the candidate matches the job requirements. There is no positive determination that the candidate attributes satisfy all minimum requirements of the employer; and there is no determination of candidate minimum requirements with employer attributes as required by Claim 5. Merely allowing an employer to advertise the desired skills of the job candidate along with other attributes does not satisfy the requirements of Claim 5.

Still further, the present method as defined in Claim 5 is not an auction process or a reverse auction process. The method of Claim 5 allows both employers and candidates to use the system and to submit search requests. The Phatak reference only allows providers, such as employment agencies, to submit a bid to provide a candidate for that particular job. See, Paragraph 0033. Also, the provider component of Fig. 8, Ref. No. 806, coordinates the registering of candidates and the placing of bids on jobs whose auction is open solely by agencies and not by candidates. There is no participation or interaction between the Phatak system and the candidate itself. The present system uses no matching rating or rating algorithm to identify how closely each candidate matches the job requirements. Instead, the method of Claim 5 makes a determination as to whether the attributes of the requesting party, either the candidate or the employer, satisfy the minimum requirements of the non-requesting party, either the candidate or employer, stored in the candidate and employer databases. If minimum requirements are satisfied, the method of Claim 5 then looks for receiving a response from the non-requesting candidate or employer consenting to the release of contact information. There is

Monster Worldwide, Inc. Exhibit 1010 (p.93/1328)

no disclosure, teaching, or suggestion in the Phatak system that an affirmative response from the non-requesting candidate or employer will be received consenting to the release of contact information before any information is actually released. The Phatak system merely rates bid offers for a particular job and submits those ratings to the employer only. This is totally different from the requirements of Claim 5. As a result, even if the Phatak reference is combined with both the Walker and Pineda references, there is still no disclosure, teaching or suggestion that a positive, affirmative response from the non-requesting party is always required consenting to the release of contact information; that a positive determination be made that the attributes of the requesting party satisfy the minimum requirements of the non-requesting party; and that a payment is obligated based upon an affirmative response to the request for release of contact information. None of these features are disclosed by the cited Walker, Pineda and Phatak references, alone or in any combination.

Claims 6, 10, 200 and 204 will stand or fall with independent Claim 5.

Rejection of Claim 14 Under 35 U.S.C. §103

Claim 14 stands rejected under 35 U.S.C. §103(a) as being unpatentable over Walker (U.S. Patent No. 5,884,270) in view of Pineda (PCT Publication No. W001/8218582) and further in view of Phatak (U.S. Patent Application Publication 2001/0042038).

Claim 14 is directed to a network for facilitating the exchange of contact information and such claim includes many of the limitations set forth and described above with respect to independent Claim 5. In this regard, Claim 14 specifically requires that the network include means for storing candidate and employer attributes and requirements in separate databases and that at least a portion of the candidate database and a portion of the employer database are searchable by either the candidate and the employer; means for processing a search request from

Monster Worldwide, Inc. Exhibit 1010 (p.94/1328)

either the candidate or the employer and providing the results of such search to the requesting party; means for receiving a request for release of contact information from the requesting party based upon the search results; and, importantly, further means for determining that the attributes of the requesting party satisfy the minimum requirements of the non-requesting party. Here again, as explained above with respect to Claim 5, none of the cited prior art references including the Walker, Pineda and Phatak references disclose this determination mechanism to ensure that all of the attributes of the requesting party stored in the appropriate database satisfy at least the minimum requirements of the non-requesting party stored in that appropriate database. This eliminates the possibility of initially matching up candidates with employers only to find out that the candidates do not have the requisite minimum requirements that the employer is looking for and, vice versa, that the employer does not meet the minimum requirements of the candidate such as location, certain minimum salary, certain benefits, and so forth. This extra determination requirement is, among other things, not disclosed in the cited prior art for all of the reasons discussed above with respect to Claim 5.

Still further, Claim 14 requires that there be mutual consent for the release of contact information regarding the candidate; that the present network compute a payment fee in real time based on the mutual consent; that it obligate the payment fee in real time; that it provide means for collecting the fee in real time; and that it provide means for exchanging the contact information in real time prior to any direct contact between the candidate and the employer. For all of the reasons discussed above with respect to Claim 5, the Pineda reference does not disclose the payment process recited in Claim 14 including, importantly, means for collecting the payment fee in real time. None of the prior art references disclose any means whatsoever for obligating or collecting the payment fee in real time. See, specification Page 91, Lines 1-9; Fig.

12, 1212. For all of these reasons, Claim 14 is clearly and patentably distinguishable over the cited Walker, Pineda and Phatak references, either alone or in combination. All of the structure, material or acts described in the specification as corresponding to each claimed means function has been set forth in Section 5 of this Appeal Brief entitled Summary of the Claimed Subject Matter.

Rejection of Claim 17 Under 35 U.S.C. §103

Claim 17 is rejected under 35 U.S.C. §103(a) as being unpatentable over Walker (U.S. Patent No. 5,884,270) in view of Pineda (PCT Publication No. W001/8218582) and further in view of Phatak (U.S. Patent Application Publication 2001/0042038).

Claim 17 is dependent upon Claim 14 and further requires that the mutual consent comprise means for receiving a response to the request for release of contact information from the non-requesting party. Here again, this is distinguishable over the Walker reference wherein release of contact information according to Walker occurs once the first and second party rules are met. The Walker exchange of information is automatic wherein Claim 17 specifically requires an affirmative response from the non-requesting party. Claim 17 is likewise distinguishable over the Pineda reference since the Pineda reference likewise does not disclose, teach or suggest any type of mutual consent between the candidate and employer for each specific request of contact information. Instead, the release of contact information is again automatic once the employer authorizes payment. No response from the non-requesting party is necessary to release the contact information of that party. It is the payment of the fee by the employer which releases the contact information. Still further, Claim 17 is distinguishable over the Phatak reference for the same reasons in that the Phatak reference does not require any type of an affirmative response from the non-requesting party for the release of contact information.

In fact, as indicated above, candidates do not participate in any way in the Phatak system and no affirmative response from a candidate is required. The Phatak merely rates the candidates on their overall fitness to fill a particular job position. Claim 17 is therefore clearly and patentably distinguishable over the Walker, Pineda and Phatak references, either alone or in any combination, and is certainly allowable in view of the fact that it includes all of the limitations of Claim 14 discussed above.

Rejection of Claim 209 Under 35 U.S.C. §103

Independent claim 209 stands rejected under 35 U.S.C. §103(a) as being unpatentable over Walker (U.S. Patent No. 5,884,270) in view of Pineda (PCT Publication No. W001/8218582) and further in view of Phatak (U.S. Patent Application Publication 2001/0042038).

Claim 209 is another independent claim along the lines of independent Claim 5 discussed above and containing many of the same distinguishing limitations as Claim 5, but Claim 209 is specifically directed to receiving a search request from the candidate only (not from either the candidate or employer) to search a searchable portion of the employer database for a possible employment opportunity. Like Claim 5, Claim 209 specifically requires that once a request is received from the candidate to submit the candidate's contact information to at least one employer based upon the search results, the present method further determines whether the attributes of the candidate satisfy the minimum requirements of the at least one employer. As previously discussed, this further screening process is not disclosed in the cited Walker, Pineda and Phatak references. Still further, Claim 209 specifically requires that the present method receive a response from the at least one employer stating that it does desire to receive the contact information of the candidate. Here again, this is not disclosed in the Walker reference wherein

release of contact information is based solely upon first and second party rules which are predetermined and preauthorized by the first and second parties. Still further, Claim 209 specifically requires that the method determine that the attributes of the candidate satisfy the minimum requirements of the at least one employer. Here again, the Walker and Pineda references do not teach this limitation (See, acknowledgement by Examiner on Page 4 of Final Office Action) and the Phatak reference merely generates a match rating using a rating algorithm to identify how closely each candidate matches the job requirements. This rating occurs regardless of whether the candidate attributes satisfy the minimum requirements of the employer. This is not the determination step recited in claim 209 wherein such determination yields one of two possible results, namely, that the candidate attributes satisfy the minimum requirements of the employer, or that the candidate attributes do not satisfy the minimum requirements of the employer. Still further, Claim 209 specifically requires obligating a payment due in real time based on the employer's consent to receive the contact information of the candidate for each specific request and that the exchange of contact information take place thereafter. Here again, this is distinguishable over the Pineda reference for the reasons discussed above with respect to Claim 5. As such, Claim 209 is clearly and patentably distinguishable over the cited Walker, Pineda and Phatak references, either alone or in combination.

Rejection of Claim 214 Under U.S.C. §103

Independent Claim 214 stands rejected under 35 U.S.C. §103(a) as being unpatentable over Walker (U.S. Patent No. 5,884,270) in view of Pineda (PCT Publication No. W001/8218582) and further in view of Phatak (U.S. Patent Application Publication 2001/0042038).

Monster Worldwide, Inc. Exhibit 1010 (p.98/1328)

Independent Claim 214 is patterned after Claim 209 and differs only in that it is the employer now requesting the search request. Claim 214 therefore contains the same distinguishing limitations as Claim 209 except that the candidate and employer roles have been reversed. As a result, Claim 214 likewise specifically requires determining that the attributes of the employer satisfy the minimum requirements of the at least one candidate; receiving an affirmative response from the at least one candidate that it desires to release the contact information to the employer; and for each specific response, obligating a payment due from the employer in real time to a career site operator. The Phatak system does not compare the attributes of the employer to the minimum requirements of the candidate. For all of the reasons discussed above with respect to Claim 209, Claim 214 is clearly and patentably distinguishable over the cited Walker, Pineda and Phatak references, either alone or in combination.

Rejection of Claim 221 Under 35 U.S.C. §103

Independent Claim 221 stands rejected under 35 U.S.C. §103(a) as being unpatentable over Walker (U.S. Patent No. 5,884,270) in view of Pineda (PCT Publication No. W001/8218582) and further in view of Phatak (U.S. Patent Application Publication 2001/0042038).

Independent Claim 221 contains many of the same distinguishing limitations as Claims 5, 14, 209 and 214 addressed above but is of somewhat different scope and is also believed to be in allowable condition for the same reasons discussed above with respect to Claims 5, 14, 209 and 214. More specifically, Claim 221 likewise specifically requires that the computer system (1) determine that the attributes of the requesting party satisfy the minimum requirements of the non-requesting party; (2) determine that there is mutual consent from both parties for the release of contact information regarding the candidate; and (3) obligates a payment due from the

Monster Worldwide, Inc. Exhibit 1010 (p.99/1328)

employer in real time based on the mutual consent for release of contact information. As clearly explained above, none of these features are disclosed, taught or even suggested in the Walker, Pineda and Phatak references, either alone or in any combination. In addition, there is no direct contact between the candidate and the employer prior to the exchange of contact information. This is not true of the Walker reference. Claim 221 is clearly and patentably distinguishable over the cited prior art.

Rejection of Claim 223 Under 35 U.S.C. §103

Dependent Claim 223 stands rejected under 35 U.S.C. §103(a) as being unpatentable over Walker (U.S. Patent No. 5,884,270) in view of Pineda (PCT Publication No. W001/8218582) and further in view of Phatak (U.S. Patent Application Publication 2001/0042038).

Claim 223 is dependent upon new independent Claim 221 and further requires that the present computer system include a payment interface operable to receive payment in real time from the employer based upon the occurrence of mutual consent. Here again, this feature is not disclosed in any of the cited prior art references including the Pineda reference. In addition, this feature in combination with the other novel features of independent Claim 221 further patentably distinguishes Claim 223.

Confusion With Respect to Claim 205

In the Final Office Action dated November 8, 2006, the Examiner has indicated in the Office Action Summary Sheet, Paragraph 7, that Claim 205 is merely objected to. In similar fashion, on Page 7 of the Final Office Action, in Paragraph 7, the Examiner has indicated that Claim 205 includes allowable subject matter and would be allowable if rewritten to include all of the limitations of the base claim and any intervening claims. However, in the first full paragraph on Page 7 of the Final Office Action, the Examiner appears to be rejecting Claim 205 on the

Monster Worldwide, Inc. Exhibit 1010 (p.100/1328)

basis of 35 U.S.C. §103 in that although the Examiner admits that the combination of Walker and Pineda fails to explicitly disclose the subject matter of Claim 205, the Examiner goes on to state that it would be obvious to a person of ordinary skill in the art to incorporate this feature into the disclosures of Walker and Pineda with the motivation to prevent an unauthorized candidate or employer from using the system. First, it is respectfully submitted that Claim 205 is substantially identical to objected Claims 211, 216 and 225, all of which claims include the same subject matter of Claim 205 and all of which claims have been indicated as containing allowable subject matter.

Still further, if the Examiner maintains the rejection of Claim 205 on the basis that it would be obvious to a person of ordinary skill in the art to incorporate this feature into the disclosures of Walker and Pineda with the motivation to prevent an unauthorized candidate or employer from using the system, this rationale and motivation is incorrect. To the contrary, the candidate and employer referred to in Claim 205 are already authorized candidates and employers. See, Figs. 3 and 8. The present system is directed to receiving responses from authorized candidates and employers once a request for contact information is issued. If an authorized candidate or an authorized employer does not respond to a previous request for release of contact information, then the present system does not allow such authorized parties to further interact with the system and receive additional search information until they have responded to all previous requests for contact information. This is clearly not shown in Walker, or Pineda or Phatak, and the Examiner has cited no other prior art for this proposition. The assumption that the present system is preventing unauthorized users from using the system is not the case. The present system is preventing authorized users from using the system if they have

Monster Worldwide, Inc. Exhibit 1010 (p.101/1328)

not responded to a previous request. Claim 205 is therefore clearly and patentably distinguishable over the cited prior art.

As a result, none of the cited prior art references including the Walker, Pineda and Phatak references provide any teachings relating to the specific method steps and system features relating to determining whether certain attributes of the requesting party satisfy minimum requirements of the non-requesting party; receiving a specific response from the non-requesting party consenting to the release of contact information (not automatic transmittal based upon first and second party rules or payment of a fee); obligating a payment in real time based upon mutual consent; actually receiving payment in real time; and preventing an authorized candidate or employer from further interaction with the system if such candidate or employer has not responded to a previous request to provide a response to the release of contact information (Claim 205). More specifically, there is no teaching or suggestion in any one or more of the cited prior art references, alone or in any combination, which remotely suggests or even hints at the specific system features identified in the appealed claims. The system and method of the present invention is much more sophisticated and interactive with both the candidate and employer and provides a novel and useful method of doing business, and sets forth a patentably distinguishable computer system and method for authorizing information exchanged between at least one candidate and at least one employer prior to any direct contact between such candidate and employer.

With respect to independent Claims 5, 14, 214 and 221, it is respectfully submitted that none of the cited prior art references, namely, Walker, Pineda or Phatak, alone or in any combination, disclose, discuss, teach or even suggest that the attributes of an employer are compared to the minimum requirements of a candidate and a determination is made as to

Monster Worldwide, Inc. Exhibit 1010 (p.102/1328)

whether the attributes of the employer actually satisfy the minimum requirements of a candidate. This feature is required in independent Claims 5, 14, 214 and 221. This determination functions as a screening process for screening out employer inquiries that do not meet the minimum requirements of a candidate. At best, the Phatak reference merely compares the attributes of a candidate to the minimum job requirements of the employer. As discussed above, even though the Phatak system compares the attributes of a candidate to the minimum job requirements, it does not make a determination as to whether the candidate attributes actually satisfy the job requirements and, importantly, it makes no determination as to whether the minimum job requirements or employer attributes satisfy the minimum requirements of the candidate. For this reason alone, independent Claim 5, 14, 214 and 221 are clearly and patentable distinguishable over all of the cited prior art.

Monster Worldwide, Inc. Exhibit 1010 (p.103/1328)

9. CONCLUSIONS

In view of the above arguments, the Appellant submits that the 35 U.S.C. §103 rejections of the pending claims are overcome and accordingly requests that the rejections be reversed. None of the cited prior art references including the Walker, Pineda and Phatak references, taken either alone or in any combination thereof, which combinations are objected to, provide any teachings relating to the specific method steps and system features relating to determining whether certain attributes of the requesting party satisfy minimum requirements of the non-requesting party; receiving a specific response from the non-requesting party consenting to the release of contact information (not automatic transmittal based upon first and second party rules or just paying a fee); obligating a payment in real time based upon mutual consent; actually receiving payment in real time; and preventing an authorized candidate or employer from further interaction with the system if such candidate or employer has not responded to a previous request to provide a response to the release of contact information. More specifically, there is no teaching or suggestion in any one or more of the cited prior art references, alone or in any combination, which remotely suggests or even hints at the specific system features identified in the presently pending claims. The system and method of the present invention is much more sophisticated and interactive with both the candidate and employer and provides a novel and useful method of doing business, and sets forth a patentably distinguishable computer system and method for authorizing information exchanged between at least one candidate and at least one employer prior to any direct contact between such candidate and employer. Forbidden hindsight has been used to support the obviousness rejections.

Monster Worldwide, Inc. Exhibit 1010 (p.104/1328)

All of the limitations set forth in the Claims presently on appeal have support in the present application and in the drawings as indicated above.

All of the claims presently on appeal contain limitations which patentably distinguish them over the cited prior art. Allowance is hereby respectfully requested.

For the record, depending upon the outcome of this Appeal, Applicant hereby reserves his right to accept allowed Claim 219 and to rewrite any one or more of objected claims 205, 210-213, 215-218, 222, 224 and 225 so as to include all of the limitations of any base claim and any intervening claims, thereby putting such objected claims in allowable form. Applicant also reserves his right to file additional divisional applications to continue the prosecution of all withdrawn claims.

Respectfully submitted,

Date: 31 Oct 07

Samuel Digirolamo
Reg. No. 29,915
Blackwell Sanders Peper Martin LLP
720 Olive Street, Suite 2400
St. Louis, MO 63101
314-345-6000
ATTORNEYS FOR APPLICANT

Appendix A – Claims Appendix

5. A method executed by a computer processor, for authorizing information exchange between at least one of a plurality of candidates and at least one of a plurality of employers prior to any direct contact between said candidate and said employer, said candidate having one or more candidate attributes including candidate minimum requirements, said employer having one or more employer attributes including employer minimum requirements, said one or more candidate attributes and minimum requirements including a searchable profile being stored in a candidate database, and said one or more employer attributes and minimum requirements including a searchable profile being stored in an employer database, said method comprising:

receiving a search request from either said candidate or said employer to search the searchable profile of one of the candidate and employer databases for a possible employment opportunity based upon certain search parameters;

processing the search request and providing the results to the requesting one of said candidate and said employer;

receiving ~~a~~ at least one request for release of contact information from the requesting one of said candidate and said employer based upon the search results;

determining that the attributes of the requesting one of said candidate and said employer satisfy the minimum requirements of a non-requesting candidate or employer stored in the candidate and employer databases;

Monster Worldwide, Inc. Exhibit 1010 (p.106/1328)

receiving a response from said non-requesting candidate or employer consenting to the release of the contact information of said candidate or said employer to said requesting party;

obligating a payment due in real time based on the response to said request for release of contact information wherein said payment due is a fee to a career site operator; and

providing exchange of contact information in real time prior to any direct contact between said candidate and said employer.

6. The method as set forth in claim 5, wherein said information exchange is the release of contact information, prior to any direct contact between the parties.

10. The method as set forth in claim 5, wherein an amount of said obligation is chosen from a general equivalency diploma amount, a high school amount, a vocational educational training amount, an associate degree amount, a bachelor degree amount, a master degree amount, and a doctorate amount, wherein said doctorate amount is greater than or equal to said master degree amount, which is greater than or equal to said bachelor degree amount, which is greater than or equal to said associate degree amount, which is greater than or equal to said vocational educational training amount, which is greater than or equal to said high school amount, which is greater than or equal to said general equivalency diploma amount.

14. A distributed network for facilitating the exchange of contact information between at least one of a plurality of candidates and at least one of a plurality of employers, said candidate having one or more candidate attributes including candidate minimum requirements, and said employer having one or more employer attributes including employer minimum requirements, said distributed network comprising:

Monster Worldwide, Inc. Exhibit 1010 (p.107/1328)

means for managing enterprise database resources;

means for storing the candidate attributes and requirements in a candidate database and providing at least a portion of the candidate database to be searched by said candidate and said employer;

means for storing the employer attributes and requirements in an employer database and providing at least a portion of the employer database to be searched by said candidate and said employer;

means for receiving a search request from either said candidate or said employer to search the searchable portion of one of the candidate and employer databases for a possible employment opportunity based upon certain search parameters;

means for processing the search request and providing the results thereof to the requesting one of said candidate and said employer;

means for receiving a request for release of contact information from the requesting one of said candidate ~~or~~ and said employer based upon the search results;

means for determining that the attributes of the requesting one of said candidate and said employer satisfy the minimum requirements of a non-requesting candidate or employer;

means for determining that there is mutual consent for release of contact information regarding the candidate;

means for computing a payment fee to the career site operator in real time based on the mutual consent for the release of contact information;

Monster Worldwide, Inc. Exhibit 1010 (p.108/1328)

means for obligating the payment fee in real time to the career site operator;

means for collecting said payment fee in real time; and

means for providing the exchange of contact information in real time prior to any direct contact between said candidate and said employer.

17. The distributed network as recited in claim 14 wherein said means for determining that there is mutual consent further comprises means for receiving a response to said request for release of contact information from the non requesting one of said candidate and said employer.

200. The method of claim 5 wherein said employer agrees in advance, to real time billing and/or payment of a fee to a career site operator upon said candidate's consent to the release of candidate's contact information.

204. The method as set forth in claim 5 wherein the amount of said obligation is computed in real time.

205. The method as set forth in claim 5 wherein before processing the search request:

determining whether the requesting one of said candidate and said employer was previously requested to provide a response to a request for release of contact information; and

if it is determined that either said employer or said candidate was previously requested to provide a response to a request for release of contact information and no response was received, then such non-responding employer or candidate is precluded from further interaction with the system until said response is provided.

208. The method as set forth in Claim 5 wherein:

if the attributes of the requesting one of said candidate and said employer do not satisfy the minimum requirements of the non-requesting candidate or employer, then communicating to said requesting one of said candidate and said employer that at least one attribute of said requesting party does not satisfy the minimum requirements of the non-requesting party;

offering the opportunity to the requesting one of said candidate and said employer to change its at least one non-satisfying attribute to satisfy the minimum requirements of the non-requesting party; and

if the requesting one of said candidate and said employer changes its at least one non-satisfying attribute to satisfy the minimum requirements of the non-requesting party, then receiving a response from said non-requesting candidate or employer consenting to the release of the contact information of said candidate to said employer.

209. A method for operating a computer system for authorizing information exchange between at least one of a plurality of candidates and at least one of a plurality of employers prior to any direct contact between said candidate and said employer, said candidate having one or more attributes, including candidate minimum requirements, and said employer having one or more attributes, including employer minimum requirements, said method comprising:

storing the candidate attributes and requirements in a candidate database;

storing the employer attributes and requirements in an employer database;

establishing a portion of the employer database to be searchable by said candidate;

receiving a search request from said candidate to search the searchable portion of the employer database for a possible employment opportunity based upon certain search parameters;

processing the search request and providing the results to the requesting candidate;

receiving a request from said candidate to submit said candidate's contact information to at least one employer based upon the search results;

determining that the attributes of the candidate satisfy the minimum requirements of the at least one employer;

receiving a response from said at least one employer that it desires to receive the contact information of said candidate;

for each specific response, obligating a payment due in real time based on said employer's consent to receive the contact information of said candidate wherein said payment due is a fee to a career site operator; and

providing the exchange of contact information in real time between said candidate and said at least one employer.

210. The method as set forth in Claim 209 wherein:

if the attributes of the candidate do not satisfy the minimum requirements of the at least one employer, then communicating to said candidate that at least one of the candidate's attributes does not satisfy the minimum requirements of the at least one employer;

offering the opportunity to said candidate to change its at least one non-satisfying attribute in order to satisfy the minimum requirements of the said at least one employer; and

if said candidate changes its at least one non-satisfying attribute to satisfy the

Monster Worldwide, Inc. Exhibit 1010 (p.111/1328)

minimum requirements of the said at least one employer, then receiving a response from said at least one employer that it desires to receive the contact information of said candidate.

211. The method as set forth in Claim 209 wherein before processing the search request of said candidate:

determining whether said candidate was previously requested to provide a response to a request for release of contact information; and

if it is determined that said candidate was previously requested to provide a response to a request for release of contact information by an employer and no response was received from said candidate, then precluding said candidate from further interaction with the computer system until a response to the previous request for release of contact information is received from said candidate.

212. The method as set forth in Claim 211 wherein:

if no response to a previous request for release of contact information is received from said candidate within a predetermined time period, then communicating to said employer that no response for release of contact information was received from said candidate.

213. The method as set forth in Claim 212 further including:

after communicating to said employer that no response for release of contact information was received from said candidate, then allowing said candidate to again interact with the computer system.

214. A method for operating a computer system for authorizing information exchange between at least one of a plurality of candidates and at least one of a plurality of employers prior to any direct contact between said candidate and said employer, said candidate having one or more attributes, including candidate minimum requirements, and said employer

Monster Worldwide, Inc. Exhibit 1010 (p.112/1328)

having one or more attributes, including employer minimum requirements, said method comprising:

storing the candidate attributes and requirements in a candidate database;

storing the employer attributes and requirements in an employer database;

establishing a portion of the candidate database to be searchable by said employer;

receiving a search request from said employer to search the searchable portion of the candidate database for a possible employment opportunity based upon certain search parameters;

processing the search request and providing the results to the requesting employer;

receiving a request from said employer for release of contact information of at least one candidate based upon the search results;

determining that the attributes of the employer satisfy the minimum requirements of the at least one candidate;

receiving a response from said at least one candidate that it desires to release the contact information of said candidate to said employer; and

for each specific response, obligating a payment due from said employer in real time based on said at least one candidate's consent for release of contact information wherein said payment due is a fee to a career site operator.

215. The method as set forth in Claim 214 wherein:

Monster Worldwide, Inc. Exhibit 1010 (p.113/1328)

if the attributes of the employer do not satisfy the minimum requirements of the at least one candidate, then communicating to said employer that at least one of the employer's attributes does not satisfy the minimum requirements of the at least one candidate;

offering the opportunity to said employer to change its at least one non-satisfying attribute in order to satisfy the minimum requirements of said at least one candidate; and

if said employer changes its at least one non-satisfying attribute in order to satisfy the minimum requirements of said at least one candidate, then receiving a response from said at least one candidate consenting to the release of the contact information of said at least one candidate to said employer.

216. The method as set forth in Claim 214 wherein before processing the search request of said employer:

determining whether said employer was previously requested to provide a response to a request for release of contact information; and

if it is determined that said employer was previously requested to provide a response to a request for release of contact information by a candidate and no response was received from said employer, then precluding said employer from further interaction with the computer system until a response to the previous request for release of contact information is received from said employer.

217. The method as set forth in Claim 216 wherein:

if no response to a previous request for release of contact information is received from said employer within a predetermined time period, then communicating to said candidate that no response for release of contact information was received from said employer.

218. The method as set forth in Claim 217 further including:

Monster Worldwide, Inc. Exhibit 1010 (p.114/1328)

after communicating to said candidate that no response for release of contact information was received from said employer, then allowing said employer to again interact with the computer system.

219. A method executed by a computer system for authorizing the exchange of contact information between at least one of a plurality of candidates and at least one of a plurality of employers prior to any direct contact between said candidate and said employer, said method comprising:

determining if either said employer or said candidate has not yet responded to a request for release of contact information;

if it is determined that either said employer or said candidate has not yet responded to a request for release for contact information, then precluding said employer or candidate from further interaction with the computer system until said response is provided;

communicating to said employer or candidate that a response to a request for release of contact information is required;

offering the opportunity to said employer or said candidate to respond to the request for release of contact information;

if said employer or candidate responds to the request for release of contact information, then determining that there is mutual consent for the release of contact information regarding such response;

obligating a payment due in real time based on the mutual consent for release of contact information wherein said payment due is a fee to a career site operator; and

providing the exchange of contact information in real time between said candidate and said employer.

Monster Worldwide, Inc. Exhibit 1010 (p.115/1328)

220. A method executed by a computer system for authorizing information exchange between at least one of a plurality of candidates and at least one of a plurality of employers prior to any direct contact between said candidate and said employer, said method comprising:

receiving a request for release of contact information from either said candidate or said employer;

determining whether there is mutual consent for the release of contact information regarding the candidate for each specific request;

receiving a response from either said candidate or said employer declining the release of contact information regarding said candidate;

querying said candidate or said employer and requesting reasons why said candidate or said employer declined the request for release of contact information; and

providing a response to said candidate or said employer communicating the reasons why said candidate or said employer declined the request for release of said contact information.

221. A computer system for coordinating information exchange between at lease one of a plurality of candidates and at least one of a plurality of employers prior to any direct contact between said candidate and said employer, said candidate having one or more candidate attributes, including candidate minimum requirements, said employer having one or more employer attributes, including employer minimum requirements, said computer system comprising:

a processor;

memory connected to said processor;

Monster Worldwide, Inc. Exhibit 1010 (p.116/1328)

at least one program for controlling the operation of said processor; and

an interface operable to communicate with said candidate and said employer;

said processor being operative with said memory and with said at least one program to:

store the candidate attributes and requirements in a candidate database;

store the employer attributes and requirements in an employer database;

establish a searchable portion of the candidate database;

establish a searchable portion of the employer database;

receive a search request from either said candidate or said employer to search the searchable portion of one of the candidate and employer databases for a possible employment opportunity;

process the search request and provide the results thereof to the requesting one of said candidate and said employer;

receive a request for release of contact information from the requesting one of said candidate and said employer based upon the search results;

determine that the attributes of the requesting one of said candidate and said employer satisfy the minimum requirements of the non-requesting candidate or employer stored in the candidate and employer databases;

obligate a payment due from said employer in real time based on the mutual consent for release of contact information wherein said payment fee is due to a career site operator; and

provide the exchange of contact information in real time prior to any direct contact between said candidate and said employer.

Monster Worldwide, Inc. Exhibit 1010 (p.117/1328)

222. A method executed by a computer system for authorizing information exchange between at least one of a plurality of candidates and at least one of a plurality of employers prior to any direct contact between said candidate and said employer, said method comprising:

receiving a request for release of contact information from either said candidate or said employer;

determining whether there is mutual consent for the release of contact information regarding the candidate for each specific request;

receiving a response from either said candidate or said employer declining the release of contact information regarding said candidate;

querying said candidate or said employer and requesting reasons why said candidate or said employer declined the request for release of contact information; and

providing a response to said candidate or said employer communicating the reasons why said candidate or said employer declined the request for release of said contact information.

223. The computer system as set forth in Claim 221 wherein said system further includes a payment interface operable to receive payment in real time from said employer, said processor being further operable to receive payment in real time from said employer through said payment interface based upon the occurrence of said mutual consent.

224. The distributed network as set forth in Claim 14 further including:

means for, if the attributes of the requesting one of said candidate and said employer do not satisfy the minimum requirements of the non-requesting candidate or employer, then communicating to the requesting one of said candidate and said employer that at least one

attribute of said requesting party does not satisfy the minimum requirements of the non-requesting party;

means for offering the opportunity to the requesting one of said candidate and said employer to change its at least one non-satisfying attribute in order to satisfy the minimum requirements of said candidate and said employer; and

means for, if the requesting one of said candidate and said employer changes its at least one non-satisfying attribute in order to satisfy the minimum requirements of said non-requesting party, determining that there is mutual consent for the release of contact information regarding said candidate to said employer.

225. The method as set forth in claim 5 wherein before processing the search request:

determining whether the non-requesting one of said candidate and said employer was previously requested to provide a response to a request for release of contact information; and

if it is determined that either said non-requesting employer or candidate was previously requested to provide a response to a request for release of contact information and no response was received, then such non-responding non-requesting employer or candidate is precluded from further interaction with the system until said response is provided.

Monster Worldwide, Inc. Exhibit 1010 (p.119/1328)

Appendix B – Evidence Appendix

U.S. Patent 5,884,270 issued to Walker

WO Published Application WO 01/82185 A2 to Pineda

U.S. Published Application 2001/0042038 to Phatak

Monster Worldwide, Inc. Exhibit 1010 (p.120/1328)

Appendix C – Related Proceedings Appendix

None

Monster Worldwide, Inc. Exhibit 1010 (p.121/1328)

Electronic Acknowledgement Receipt

EFS ID:	2404863
Application Number:	10101644
International Application Number:	
Confirmation Number:	8626
Title of Invention:	Apparatus and methods for providing career and employment services
First Named Inventor/Applicant Name:	Marc Vianello
Customer Number:	27128
Filer:	Samuel Digirolamo/Susan Murphy
Filer Authorized By:	Samuel Digirolamo
Attorney Docket Number:	15703.10002
Receipt Date:	31-OCT-2007
Filing Date:	19-MAR-2002
Time Stamp:	15:33:47
Application Type:	Utility under 35 USC 111(a)

Payment information:

Submitted with Payment	no

File Listing:

Document Number	Document Description	File Name	File Size(Bytes) /Message Digest	Multi Part /.zip	Pages (if appl.)
1	Supplemental Appeal Brief	AmendedAppealBrief.pdf	4056397 264bdc3746657998956d1cf741d772683ef20a6b	no	71

Warnings:

Information:	
Total Files Size (in bytes):	4056397

This Acknowledgement Receipt evidences receipt on the noted date by the USPTO of the indicated documents, characterized by the applicant, and including page counts, where applicable. It serves as evidence of receipt similar to a Post Card, as described in MPEP 503.

New Applications Under 35 U.S.C. 111
If a new application is being filed and the application includes the necessary components for a filing date (see 37 CFR 1.53(b)-(d) and MPEP 506), a Filing Receipt (37 CFR 1.54) will be issued in due course and the date shown on this Acknowledgement Receipt will establish the filing date of the application.

National Stage of an International Application under 35 U.S.C. 371
If a timely submission to enter the national stage of an international application is compliant with the conditions of 35 U.S.C. 371 and other applicable requirements a Form PCT/DO/EO/903 indicating acceptance of the application as a national stage submission under 35 U.S.C. 371 will be issued in addition to the Filing Receipt, in due course.

New International Application Filed with the USPTO as a Receiving Office
If a new international application is being filed and the international application includes the necessary components for an international filing date (see PCT Article 11 and MPEP 1810), a Notification of the International Application Number and of the International Filing Date (Form PCT/RO/105) will be issued in due course, subject to prescriptions concerning national security, and the date shown on this Acknowledgement Receipt will establish the international filing date of the application.

UNITED STATES PATENT AND TRADEMARK OFFICE

UNITED STATES DEPARTMENT OF COMMERCE
United States Patent and Trademark Office
Address: COMMISSIONER FOR PATENTS
P.O. Box 1450
Alexandria, Virginia 22313-1450
www.uspto.gov

APPLICATION NO.	FILING DATE	FIRST NAMED INVENTOR	ATTORNEY DOCKET NO.	CONFIRMATION NO.
10/101,644	03/19/2002	Marc Vianello	15703.10002	8626

27128 7590 10/18/2007

BLACKWELL SANDERS LLP
720 OLIVE STREET
SUITE 2400
ST. LOUIS, MO 63101

EXAMINER	
ART UNIT	PAPER NUMBER

DATE MAILED: 10/18/2007

Please find below and/or attached an Office communication concerning this application or proceeding.

Notification of Non-Compliant Appeal Brief (37 CFR 41.37)	Application No.	Applicant(s)	
	10/101,644	VIANELLO, MARC	
	Examiner	Art Unit	
	Romain Jeanty	3623	

--The MAILING DATE of this communication appears on the cover sheet with the correspondence address--

The Appeal Brief filed on *20 February 2007* is defective for failure to comply with one or more provisions of 37 CFR 41.37.

To avoid dismissal of the appeal, applicant must file anamended brief or other appropriate correction (see MPEP 1205.03) within **ONE MONTH or THIRTY DAYS** from the mailing date of this Notification, whichever is longer. **EXTENSIONS OF THIS TIME PERIOD MAY BE GRANTED UNDER 37 CFR 1.136.**

1. ☐ The brief does not contain the items required under 37 CFR 41.37(c), or the items are not under the proper heading or in the proper order.

2. ☒ The brief does not contain a statement of the status of all claims, (e.g., rejected, allowed, withdrawn, objected to, canceled), or does not identify the appealed claims (37 CFR 41.37(c)(1)(iii)).

3. ☐ At least one amendment has been filed subsequent to the final rejection, and the brief does not contain a statement of the status of each such amendment (37 CFR 41.37(c)(1)(iv)).

4. ☐ (a) The brief does not contain a concise explanation of the subject matter defined in each of the independent claims involved in the appeal, referring to the specification by page and line number and to the drawings, if any, by reference characters; and/or (b) the brief fails to: (1) identify, for each independent claim involved in the appeal and for each dependent claim argued separately, every means plus function and step plus function under 35 U.S.C. 112, sixth paragraph, and/or (2) set forth the structure, material, or acts described in the specification as corresponding to each claimed function with reference to the specification by page and line number, and to the drawings, if any, by reference characters (37 CFR 41.37(c)(1)(v)).

5. ☐ The brief does not contain a concise statement of each ground of rejection presented for review (37 CFR 41.37(c)(1)(vi))

6. ☐ The brief does not present an argument under a separate heading for each ground of rejection on appeal (37 CFR 41.37(c)(1)(vii)).

7. ☐ The brief does not contain a correct copy of the appealed claims as an appendix thereto (37 CFR 41.37(c)(1)(viii)).

8. ☐ The brief does not contain copies of the evidence submitted under 37 CFR 1.130, 1.131, or 1.132 or of any other evidence entered by the examiner **and relied upon by appellant in the appeal**, along with a statement setting forth where in the record that evidence was entered by the examiner, as an appendix thereto (37 CFR 41.37(c)(1)(ix)).

9. ☐ The brief does not contain copies of the decisions rendered by a court or the Board in the proceeding identified in the Related Appeals and Interferences section of the brief as an appendix thereto (37 CFR 41.37(c)(1)(x)).

10. ☐ Other (including any explanation in support of the above items):

All the pending claims are nlo listed in the Apendix (i.e. claims 210-213, 215-216, 217-220, 222 and , 224, 225).

Romain Jeanty
Primary Examiner
Art Unit: 3623

PATENT
15703.10002

IN THE UNITED STATES PATENT AND TRADEMARK OFFICE

Application of: Marc Vianello	:	
	:	Examiner: Romain Jeanty
	:	
Serial No.: 10/101,644	:	Group Art Unit: 3623
	:	
Filed: March 19, 2002	:	Attorney Docket No.: 15703.10002
	:	
For: APPARATUS AND METHODS FOR PROVIDING CAREER EMPLOYMENT SERVICES	:	Customer No.: 27128
	:	Confirmation No.: 8626
	:	

APPEAL BRIEF TO BOARD OF PATENT APPEALS AND INTERFERENCES UNDER 37 C.F.R. SECTION 41.37

Mail Stop Appeal Brief - Patents
Commissioner for Patents
P.O. Box 1450
Alexandria, VA 22313-1450

Sir:

Appellant submits the following Appeal Brief to the Board of Patent Appeals and Interferences.

Monster Worldwide, Inc. Exhibit 1010 (p.126/1328)

TABLE OF CONTENTS

	Page
1. The Real Party In Interest	3
2. Related Appeals and Interferences	4
3. Status of Claims	5
4. Status of Amendments	6
5. Summary of the Claimed Subject Matter	8
6. Grounds of Rejection to be Reviewed on Appeal	21
7. The Relevant Law	22
8. Arguments	27
9. Conclusions	54
10. Appendix A – Claims Appendix	56
11. Appendix B – Evidence Appendix	65
12. Appendix C – Related Proceedings Appendix	66

1. THE REAL PARTY IN INTEREST

The real party in interest for the above referenced application is Mr. Marc Vianello, an individual, with an office at 6299 Nall Avenue, Suite 210, Mission, Kansas 66202. Mr. Vianello is the inventor and sole owner of the entire right, title and interest in and to the invention and the pending patent application.

2. RELATED APPEALS AND INTERFERENCES

There are no other appeals or interferences known to Applicant (Appellant) or Applicant's (Appellant's) Legal Representative which will directly affect, or be directly affected by, or have a bearing on, the Board of Patent Appeals and Interferences' decision in the pending Appeal.

3. STATUS OF CLAIMS

Claims 5, 6, 10, 14, 17, 200, 204, 205, 208-219 and 221-225 are currently pending in the application. Claims 1-4, 18-197 and 220 have been withdrawn. Claim 219 has been allowed. Claims 205, 210-213, 215-218, 222, 224 and 225 are merely objected to. Claims 7-9, 11-13, 15-16, 198-199, 201-203 and 206-207 were cancelled.

Claims 5, 6, 10, 14, 17, 200, 204, 205, 208, 209, 214, 221 and 223 stand rejected and are the subject of this appeal.

Claim 205 is both merely objected to and rejected.

For the record, depending upon the outcome of this Appeal, Applicant hereby reserves his right to accept allowed Claim 219 and to rewrite any one or more of objected claims 205, 210-213, 215-218, 222, 224 and 225 so as to include all of the limitations of any base claim and any intervening claims, thereby putting such objected claims in allowable form. Applicant also reserves his right to file additional divisional applications to continue the prosecution of all withdrawn claims.

4. STATUS OF AMENDMENTS

In the current application, an initial Final Rejection was mailed on May 19, 2004. On August 23, 2004 Applicant's submitted an Amendment along with a Notice of Appeal. On October 12, 2004 an Advisory Action was issued and the previously filed Amendment was not entered into the record. In response to the Advisory Action a Request for Continued Examination was submitted on October 19, 2004. On January 12, 2005 a non-final office action was mailed. An Amendment in response to the non-final office action was filed on April 4, 2005.

A second Final Rejection was mailed July 14, 2005. On September 2, 2005, Applicant's filed a Request for Continued Examination along with an Amendment. On November 10, 2005 a non-final office action was mailed. A response to this office action was filed on January 23, 2006. A Supplemental Amendment was filed on April 20, 2006. On August 1, 2006 a restriction requirement was issued by the Examiner. A response to the restriction requirement and an election of claims was filed August 22, 2006.

On November 8, 2006 a Third Final Rejection was mailed. In response to this Final Rejection a Notice of Appeal was filed by Applicants. No further amendments were filed and all of the above referenced amendments were entered into the record.

For the record, depending upon the outcome of this Appeal, Applicant hereby reserves his right to accept allowed Claim 219 and to rewrite any one or more of objected claims 205, 210-213, 215-218, 222, 224 and 225 so as to include all of the limitations of any base claim and

Monster Worldwide, Inc. Exhibit 1010 (p.131/1328)

any intervening claims, thereby putting such objected claims in allowable form. Applicant also reserves his right to file additional divisional applications to continue the prosecution of all withdrawn claims.

5. SUMMARY OF THE CLAIMED SUBJECT MATTER

There are five (5) independent claims involved in this appeal, namely, Claims 5, 14, 209, 214 and 221. Independent Claim 219 has been allowed and is not part of this Appeal. Support for the independent claims on appeal is set forth below by reference to the specification by page and line number, and by reference to the appropriate drawings by reference characters.

Dependent Claim 205 is both rejected and merely objected to in the Final Office Action. Although Applicant believes that Claim 205 is merely objected to and would be allowable if rewritten in independent form, to preserve Applicant's rights with respect to Claim 205, Applicant is also appealing Claim 205 if such claim is rejected under 35 U.S.C. §103(a).

The present invention is directed to systems, methods, distributed networks and computer-readable media which are provided to both candidates and employers for employment services. In one embodiment, a career web site is provided wherein users wishing to search jobs or candidate profiles do not have to register to gain access to a subset of features on the site. Background information associated with a candidate's capabilities and attributes is received from a candidate in a structured format. Job description information is received from employers in a structured format. Prospective matches are identified between employers and candidates, and employers and candidates are given an opportunity to mutually consent to the exchange of candidate contact information. This exchange of information takes place before any direct contact between a particular candidate and a particular employer. After such mutual consent has been granted, a financial transaction is consummated wherein a user pays a fee to the career site operator. The fee is generated when a user elects to purchase contact information corresponding to a candidate profile. A participating user pays nothing until it identifies a candidate having an

appropriate set of skills and experience, and the candidate has expressed an interest in the employer.

Independent Claim 5 is directed to a method executed by a computer processor for authorizing information exchanged between at least one of a plurality of candidates and at least one of a plurality of employers prior to any direct contact between the candidate and the employer (Page 20, Line 20 to Page 21, Line 1; Page 21, Lines 9-13; Fig. 12, Ref. Nos. 1206, 1208, 1209, 1210). The candidate will have one or more candidate attributes including candidate minimum requirements (Page 41, Line 22 to Page 42, Line 11; Page 55, Lines 2-5; Page 56, Lines 6-17; Fig. 2, Ref. No. 204; Fig. 3, Ref. Nos. 304, 306, 307), and the employer will have one or more employer attributes including employer minimum requirements (Page 71, Line 20 to Page 72, Line 21; Page 74, Lines 13-16; Fig. 8, Ref. Nos. 808, 823, 824, 825, 826). The one or more candidate attributes and minimum requirements are then stored in a candidate database which includes a searchable profile of the candidate (Page 22, Line 15 to Page 24, Line 19; Page 27, Lines 1-3; Fig. 2, Ref. Nos. 213-224; Fig. 3, Ref. No. 309). In similar fashion, the one or more employer attributes and minimum requirements are stored in an employer database which includes a searchable employer profile (Page 17, Line 20 to Page 18, Line 5; Page 43, Lines 10-16; Page 71, Line 16 to Page 72, Line 21; Page 74, Lines 8-12; Fig. 8, Ref. No. 808). The present method includes receiving a search request from either a candidate or an employer to search the searchable profile of one of the candidate and employer databases for a possible employment opportunity based upon certain search parameters (Page 19, Lines 10-15; Page 28, Lines 1-2; Page 41, Lines 9-15; Page 42, Lines 12-19; Page 43, Lines 21-23; Page 49, Lines 15-20; Fig. 2, Ref. Nos. 206, 212). Once the search request is received, the search request is processed and results of the search request are provided to the requesting candidate or employer

(Page 19, Line 5 to Page 20, Line 15; Page 75, Line 21 to Page 83, Line 13; Fig. 4, Ref. Nos. 401, 409; Fig. 10, Ref. Nos. 1003, 1004, 1006, 1008, 1009, 1010). Once the search results are provided to either the requesting candidate or employer, the method further includes receiving at least one request for release of contact information from the requesting candidate or employer based upon the search results (Page 62, Lines 10-18; Page 83, Line 21 to Page 84, Line 4; Fig. 4, Ref. No. 414; Fig. 10, Ref. Nos. 1011, 1014). Once a request for release of contact information has been received, the method then determines whether the attributes of the requesting candidate or employer satisfy the minimum requirements of the non-requesting party (Page 19, Line 16 to Page 20, Line 15; Page 62, Lines 19-23; Page 63, Lines 1-18; Fig. 4, Ref. No. 417; Fig. 10, Ref. No. 1017; Fig. 7A, Ref. Nos. 702, 706; Fig. 7B, Ref. Nos. 752, 756). Once the minimum requirements are determined, the method must receive a response from the non-requesting candidate or employer consenting to the release of contact information to the requesting party (Page 20, Line 16 to Page 21, Line 20; Page 75, Lines 1-7; Page 84, Lines 1-3; Page 88, Line 20 to Page 90, Line 11; Fig. 11, Ref. Nos. 1103, 1105, 1108; Fig. 12, Ref. Nos. 1201, 1206). Once a positive response for the release of contact information has been received, the method then obligates a payment due in real time based on the response to the request for release of contact information wherein the payment due is a fee to a carrier site operator (Page 16, Line 16 to Page 17, Line 11; Page 90, Lines 14-19; Fig. 12, Ref. Nos. 1210, 1211, 1212, 1213). Once payment is obligated, the contact information is provided to the requesting party in real time prior to any direct contact between the candidate and the employer (Page 90, Lines 14-21; Fig. 12, Ref. No. 1210).

Independent Claim 14 is directed to a distributed network for facilitating the exchange of contact information between at least one of a plurality of candidates and at least one of a

Monster Worldwide, Inc. Exhibit 1010 (p.135/1328)

plurality of employers (Page 20, Line 20 to Page 21, Line 1; Page 21, Lines 9-13; Fig. 12, Ref. Nos. 1206, 1208, 1209, 1210), the candidate having one or more candidate attributes including candidate minimum requirements (Page 41, Line 22 to Page 42, Line 11; Page 55, Lines 2-5; Page 56, Lines 6-17; Fig. 2, Ref. No. 204; Fig. 3, Ref. Nos. 304, 306, 307), and the employer having one or more employer attributes including employer minimum requirements (Page 71, Line 20 to Page 72, Line 21; Page 74, Lines 13-16; Fig. 8, Ref. Nos. 808, 823, 824, 825, 826). The distributed network further includes means for managing enterprise data resources. This means is identified in the specification at Page 24, Line 20 to Page 25, Line 19; Page 33, Lines 3-9; Page 100, Lines 1-8; Fig. 2, Ref. Nos. 213-224; Fig. 3, Ref. No. 309. The distributed network further includes means for storing the candidate attributes and requirements in the candidate database and means for providing at least a portion of the candidate database to be searched by the candidate and employer. This means is identified in the specification at Page 35, Lines 7-15; Page 36, Line 21 to Page 37, Line 5; Page 41, Line 22 to Page 42, Line 11; Page 44, Line 13 to Page 45, Line 12; Page 46, Lines 5-23; Page 48, Lines 19-24; Page 100, Lines 1-8; Fig. 2, Ref. Nos. 204, 205, 213-224; Fig. 3, Ref. No. 309. The distributed network further includes means for storing the employer attributes and requirements in an employer database and means for providing at least a portion of the employer database to be searched by the candidate and employer. This means is identified in the specification at Page 40, Lines 9-21; Page 43, Lines 10-16; Page 44, Line 13 to Page 45, Line 12; Page 46, Lines 5-23; Page 48, Lines 19-24; Page 49, Lines 3-12; Page 100, Lines 1-8; Fig. 2, Ref. Nos. 210, 211, 213-224; Fig. 3, Ref. No. 309. The distributed network further includes means for receiving a search request from either the candidate or the employer to search the searchable portion of one of the candidate and employer databases for a possible employment opportunity based upon certain search parameters. This

Monster Worldwide, Inc. Exhibit 1010 (p.136/1328)

means is programmable software and is identified in Fig. 2, Ref. Nos. 206, 212; Fig. 3, Ref. No. 303. The distributed network further includes means for processing the search request and providing the results thereof to the requesting one of the candidate and employer. This means is programmable software and is identified in Fig. 4, Ref. Nos. 401, 409; Fig. 8, Ref. No. 803; Fig. 10, Ref. Nos. 1003, 1004, 1006, 1008, 1009, 1010. The distributed network further includes means for receiving a request for release of contact information from the requesting one of the candidate and employer based upon the search results. This means is programmable software and is identified in Fig. 11, Ref. Nos. 1101, 1103; Fig. 12, Ref. No. 1206. The distributed network further includes means for determining that the attributes of the requesting one of the candidate and the employer satisfy the minimum requirements of the non-requesting candidate or employer. This means is programmable software and is identified in Fig. 4, Ref. No. 417; Fig. 10, Ref. No. 1017. The distributed network further includes means for determining that there is mutual consent for the release of contact information regarding the candidate. This means is programmable software and is identified in Fig. 11, Ref. No. 1108; Fig. 12, Ref. No. 1208. The distributed network further includes means for computing a payment fee to the career site operator in real time based on the mutual consent for the release of contact information. This means is identified in the specification at Page 16, Line 22 to Page 17, Line 11; Fig. 12, Ref. No. 1211. The distributed network further includes means for obligating the payment fee in real time to the career site operator. The means is identified in the specification at Page 90, Lines 14-19; Fig. 12, Ref. No. 1211. The distributed network further includes means for collecting the payment fee in real time. This means is identified in the specification at Page 91, Lines 1-9; Fig. 12, Ref. No. 1212. The distributed network further includes means for providing the exchange of contact information in real time prior to any direct contact between the candidate and the

employer. This means is identified in the specification at Page 22, Lines 6-8; Fig. 12, Ref. No. 1213.

Dependent Claim 17 is dependent directly upon independent claim 14 and further defines the means for determining that there is mutual consent. More specifically, claim 17 further requires that the means for determining that there is mutual consent include means for receiving a response to the request for release of contact information from the non-requesting one of the candidate and the employer. This means is again programmable software and is identified in Fig. 2, Ref. Nos. 325, 326; Fig. 8, Ref. Nos. 831, 832; Fig. 11, Ref. Nos. 1101, 1103, 1105, 1108; Fig. 12, Ref. Nos. 1201, 1206, 1208.

Dependent Claim 205 is both merely objected to (See, Final Office Action, Page 7, Paragraph 7) and rejected under 35 U.S.C. §103(a)) (See, Final Office Action, Page 7, first full paragraph). Dependent Claim 205 is dependent directly upon Claim 5 and adds additional method steps to the method of Claim 5. More particularly, dependent Claim 205 requires a determination to be made before processing the search request as to whether the requesting one of the candidate and employer was previously requested to provide a response to a request for release of contact information and, if it is determined that either the employer or the candidate was previously requested to provide a response to a request for release of contact information and no response was received, then precluding the non-responding employer or candidate from further interaction with the system until a response is provided (Page 56, Line 20 to Page 57, Line 3; Fig. 3, Ref. Nos. 336, 337; Page 74, Lines 13-20; Fig. 8, Ref. Nos. 831, 832).

Dependent Claim 208 is dependent directly upon claim 5 and adds additional method steps to the method of Claim 5. More particularly, dependent claim 208 requires that if the attributes of the requesting one of the candidate and employer do not satisfy the minimum

Monster Worldwide, Inc. Exhibit 1010 (p.138/1328)

requirements of the non-requesting candidate or employer, then the present method will communicate to the requesting one of the candidate and employer that at least one attribute of the requesting party does not satisfy the minimum requirements of the non-requesting party (Page 19, Line 10 to Page 20, Line 15; Page 84, Line 16 to Page 85, Line 8; Fig. 4, Ref. Nos. 417, 418, 419; Fig. 10, Ref. Nos. 1017, 1018, 1019). The method further includes offering the opportunity to the requesting one of the candidate and employer to change its at least one non-satisfying attribute so as to satisfy the minimum requirements of the non-requesting party (Page 19, Line 10 to Page 20, Line 15; Page 84, Line 16 to Page 85, Line 8; Fig. 4, Ref. Nos. 417, 418, 419; Fig. 10, Ref. Nos. 1017, 1018, 1019). Still further, in accordance with the method of claim 208, if the requesting one of the candidate and employer changes its at least one non-satisfying attribute so as to satisfy the minimum requirements of the non-requesting party, then the present method then waits to receive a response from the non-requesting candidate or employer consenting to the release of the contact information of the candidate to the employer (Page 19, Line 10 to Page 20, Line 15; Page 84, Line 16 to Page 85, Line 8; Fig. 4, Ref. Nos. 417, 418, 419; Fig. 10, Ref. Nos. 1017, 1018, 1019).

Independent Claim 209 is directed to a method for operating a computer system for authorizing information exchange between at least one of a plurality of candidates in at least one of a plurality of employers prior to any direct contact between the candidate and the employer (Page 20, Line 20 to Page 21, Line 1; Page 21, Lines 9-13; Fig. 12, Ref. Nos. 1206, 1208, 1209, 1210). The candidate will have one or more attributes including candidate minimum requirements (Page 41, Line 22 to Page 42, Line 11; Page 55, Lines 2-5; Page 56, Lines 6-17; Fig. 2, Ref. No. 204; Fig. 3, Ref. Nos. 304, 306, 307), and the employer will have one or more attributes including employer minimum requirements (Page 71, Line 20 to Page 72, Line 21;

Page 74, Lines 13-16; Fig. 8, Ref. Nos. 808, 823, 824, 825, 826). The present method includes storing the candidate attributes and requirements in a candidate database (Page 22, Line 15 to Page 24, Line 19; Page 27, Lines 1-3; Fig. 2, Ref. Nos. 213-224; Fig. 3, Ref. No. 309); storing the employer attributes and requirements in an employer database (Page 17, Line 20 to Page 18, Line 5; Page 43, Lines 10-16; Page 71, Line 16 to Page 72, Line 21; Page 74, Lines 8-12; Fig. 8, Ref. No. 808); and establishing a portion of the employer database to be searchable by the candidate (Page 41, Lines 16-19; Page 42, Lines 9-11; Page 53, Line 11 to Page 54, Line 6; Page 70, Lines 4-23; Page 72, Lines 18-20; Page 74, Lines 8-12; Fig. 2, Ref. Nos. 210, 212; Fig. 8, Ref. Nos. 808, 823, 824, 825, 826). The present method further includes receiving a search request from a candidate to search the searchable portion of the employer database for a possible employment opportunity based upon certain search parameters (Page 19, Lines 10-15; Page 28, Lines 1-2; Page 41, Lines 9-15; Page 42, Lines 12-19; Page 43, Lines 21-23; Page 49, Lines 15-20; Fig. 2, Ref. Nos. 206, 212). Once the search request is received, the method processes the search request and provides the results to the requesting candidate (Page 19, Line 5 to Page 20, Line 15; Page 75, Line 21 to Page 83, Line 13; Fig. 4, Ref. Nos. 401, 409; Fig. 10, Ref. Nos. 1003, 1004, 1006, 1008, 1009, 1010). The method then waits to receive a request from the candidate to submit the candidate's contact information to at least one employer based upon the search results (Page 62, Lines 10-18; Page 83, Line 21 to Page 84, Line 4; Fig. 4, Ref. No. 414; Fig. 10, Ref. Nos. 1011, 1014). When this request is received, the present method determines whether the attributes of the candidate satisfy the minimum requirements of the at least one employer (Page 19, Line 16 to Page 20, Line 15; Page 62, Lines 19-23; Page 63, Lines 1-18; Fig. 4, Ref. No. 417; Fig. 10, Ref. No. 1017; Fig. 7A, Ref. Nos. 702, 706; Fig. 7B, Ref. Nos. 752, 756). If the minimum requirements are met, the method then waits to receive a response from

the at least one employer that it desires to receive the contact information of the candidate (Page 20, Line 16 to Page 21, Line 20; Page 75, Lines 1-7; Page 84, Lines 1-3; Page 88, Line 20 to Page 90, Line 11; Fig. 11, Ref. Nos. 1103, 1105, 1108; Fig. 12, Ref. Nos. 1201, 1206). For each specific response received from the employer acknowledging or consenting to the receipt of contact information of the candidate, the present method obligates a payment due in real time to the employer based upon the employer's consent to receive the contact information of the candidate wherein the payment due is a fee to a career site operator (Page 16, Line 16 to Page 17, Line 11; Page 90, Lines 14-19; Fig. 12, Ref. Nos. 1210, 1211, 1212, 1213), and thereafter the method provides the exchange of contact information in real time between the candidate and the at least one employer (Page 90, Lines 14-21; Fig. 12, Ref. No. 1210).

Independent Claim 214 is directed to a method for operating a computer system for authorizing information exchange between at least one of a plurality of candidates and at least one of a plurality of employers prior to any direct contact between the candidate and the employer (Page 20, Line 20 to Page 21, Line 1; Page 21, Lines 9-13; Fig. 12, Ref. Nos. 1206, 1208, 1209, 1210). The candidate will likewise have one or more candidate attributes, including candidate minimum requirements (Page 41, Line 22 to Page 42, Line 11; Page 55, Lines 2-5; Page 56, Lines 6-17; Fig. 2, Ref. No. 204; Fig. 3, Ref. Nos. 304, 306, 307), and the employer will likewise have one or more employer attributes, including employer minimum requirements (Page 71, Line 20 to Page 72, Line 21; Page 74, Lines 13-16; Fig. 8, Ref. Nos. 808, 823, 824, 825, 826). This method includes storing the candidate attributes and requirements in a candidate database (Page 22, Line 15 to Page 24, Line 19; Page 27, Lines 1-3; Fig. 2, Ref. Nos. 213-224; Fig. 3, Ref. No. 309); storing the employer attributes and requirements in an employer database (Page 17, Line 20 to Page 18, Line 5; Page 43, Lines 10-16; Page 71, Line 16 to Page 72, Line

21; Page 74, Lines 8-12; Fig. 8, Ref. No. 808); and establishing a portion of the candidate database to be searchable by the employer (Page 18, Lines 15-21; Page 22, Lines 20-23; Page 42, Lines 9-11; Page 55, Lines 21-23; Page 56, Lines 15-17; Fig. 2, Ref. Nos. 213-224; Fig. 3, Ref. No. 309). The present method further includes receiving a search request from an employer to search the searchable portion of the candidate database for a possible employment opportunity based upon certain search parameters (Page 19, Lines 10-15; Page 28, Lines 1-2; Page 41, Lines 9-15; Page 42, Lines 12-19; Page 43, Lines 21-23; Page 49, Lines 15-20; Fig. 2, Ref. Nos. 206, 212). Once the search request is received, the method processes the search request and provides the search results to the requesting employer (Page 19, Line 5 to Page 20, Line 15; Page 75, Line 21 to Page 83, Line 13; Fig. 4, Ref. Nos. 401, 409; Fig. 10, Ref. Nos. 1003, 1004, 1006, 1008, 1009, 1010). The method then waits to receive a request from the employer for release of contact information of at least one candidate based upon the search results (Page 62, Lines 10-18; Page 83, Line 21 to Page 84, Line 4; Fig. 4, Ref. No. 414; Fig. 10, Ref. Nos. 1011, 1014). When this request is received, the present method determines whether the attributes of the employer satisfy the minimum requirements of the at least one candidate (Page 19, Line 16 to Page 20, Line 15; Page 62, Lines 19-23; Page 63, Lines 1-18; Fig. 4, Ref. No. 417; Fig. 10, Ref. No. 1017; Fig. 7A, Ref. Nos. 702, 706; Fig. 7B, Ref. Nos. 752, 756). If the minimum requirements are met, the method then waits to receive a response from the at least one candidate that the candidate desires to release the contact information to the employer (Page 20, Line 16 to Page 21, Line 20; Page 75, Lines 1-7; Page 84, Lines 1-3; Page 88, Line 20 to Page 90, Line 11; Fig. 11, Ref. Nos. 1103, 1105, 1108; Fig. 12, Ref. Nos. 1201, 1206). For each specific response received from the candidate acknowledging or consenting to the release of contact information, the present method obligates a payment due from the employer in real time based on the at least

one candidate's consent for release of contact information wherein the payment due is a fee to a career site operator (Page 16, Line 16 to Page 17, Line 11; Page 90, Lines 14-19; Fig. 12, Ref. Nos. 1210, 1211, 1212, 1213). Once payment is obligated, the present method then provides the exchange of contact information in real time between the at least one candidate and the employer (Page 90, Lines 14-21; Fig. 12, Ref. No. 1210).

Independent Claim 221 is directed to a computer system (Page 14, Lines 9-20; Fig. 1, Ref. Nos. 110, 120, 140) for coordinating information exchange between at least one of a plurality of candidates and at least one of a plurality of employers prior to any direct contact between a candidate and an employer (Page 20, Line 20 to Page 21, Line 1; Page 21, Lines 9-13; Fig. 12, Ref. Nos. 1206, 1208, 1209, 1210). The candidate will have one or more candidate attributes, including candidate minimum requirements (Page 41, Line 22 to Page 42, Line 11; Page 55, Lines 2-5; Page 56, Lines 6-17; Fig. 2, Ref. No. 204; Fig. 3, Ref. Nos. 304, 306, 307), and the employer will have one or more employer attributes, including employer minimum requirements (Page 71, Line 20 to Page 72, Line 21; Page 74, Lines 13-16; Fig. 8, Ref. Nos. 808, 823, 824, 825, 826). The computer system includes a processor (Page 14, Lines 9-20; Fig. 1, Ref. Nos. 110, 140); memory connected to the processor (Page 16, Lines 7-10; Fig. 1, Ref. Nos. 110, 140); at least one program (Figs. 3-14) for controlling the operation of the processor (Page 14, Line 9 to Page 15, Lines 2: fig. 1, Ref. Nos. 110,140); and an interface operable to communicate with the candidate and the employer (Page 14, Line 9 to Page 15, Line 23: Fig. 1, Ref. Nos. 110, 120). The processor is operable with the memory and with the at least one program (Page 14, Line 9 to Page 16, Line 10; Fig. 1, Ref. Nos. 110, 120, 140) to store the candidate attributes and requirements in a candidate database (Page 22, Line 15 to Page 24, Line 19; Page 27, Lines 1-3; Fig. 2, Ref. Nos. 213-224; Fig. 3, Ref. No. 309); to store the employer

Monster Worldwide, Inc. Exhibit 1010 (p.143/1328)

attributes and requirements in an employer database (Page 17, Line 20 to Page 18, Line 5; Page 43, Lines 10-16; Page 71, Line 16 to Page 72, Line 21; Page 74, Lines 8-12; Fig. 8, Ref. No. 808); to establish a searchable portion of both the candidate and employer databases (Page 18, Lines 15-21; Page 22, Lines 20-23; Page 41, Lines 16-19; Page 42, Lines 9-11; Page 53, Line 11 to Page 54, Line 6; Page 55, Lines 21-23; Page 56, Lines 15-17; Page 70, Lines 4-23; Page 72, Line 18-20; Page 74, Lines 8-12); and to receive search requests from either the candidate or the employer to search the searchable portion of one of the candidate and employer databases for a possible employment opportunity (Page 19, Lines 10-15; Page 28, Lines 1-2; Page 41, Lines 9-15; Page 42, Lines 12-19; Page 43, Lines 21-23; Page 49, Lines 15-20; Fig. 2, Ref. Nos. 206, 212). The processor is also operable to process the search request and provide the results of the search to the requesting party (Page 19, Line 5 to Page 20, Line 15; Page 75, Line 21 to Page 83, Line 13; Fig. 4, Ref. Nos. 401, 409; Fig. 10, Ref. Nos. 1003, 1004, 1006, 1008, 1009, 1010); to receive a request for release of contact information from the requesting candidate or employer based upon the search results (Page 62, Lines 10-18; Page 83, Line 21 to Page 84, Line 4; Fig. 4, Ref. No. 414; Fig. 10, Ref. Nos. 1011, 1014); and to determine whether the attributes of the requesting candidate or employer satisfy the minimum requirements of the non-requesting candidate or employer stored in the candidate or employer database (Page 19, Line 16 to Page 20, Line 15; Page 62, Lines 19-23; Page 63, Lines 1-18; Fig. 4, Ref. No. 417; Fig. 10, Ref. No. 1017; Fig. 7A, Ref. Nos. 702, 706; Fig. 7B, Ref. Nos. 752, 756). The processor is further operative to determine whether there is mutual consent for the release of contact information regarding the candidate (Page 20, Line 16 to Page 21, Line 20; Page 75, Lines 1-7; Page 84, Lines 1-3; Page 88, Line 20 to Page 90, Line 11; Fig. 11, Ref. Nos. 1103, 1105, 1108; Fig. 12, Ref. Nos. 1201, 1206) and to obligate a payment due from the employer in real time based on the

mutual consent for release of contact information wherein the payment fee is due to a career site operator (Page 16, Line 16 to Page 17, Line 11; Page 90, Lines 14-19; Fig. 12, Ref. Nos. 1210, 1211, 1212, 1213). Once payment is obligated, the processor is further operative to provide the exchange of contact information in real time prior to any real direct contact between the candidate and the employer (Page 90, Lines 14-21; Fig. 12, Ref. No. 1210).

Dependent Claim 223 is dependent upon independent Claim 221 and further includes adding a payment interface to the system operable to receive payment in real time from the employer (Page 92, Lines 1-9; Fig. 12, Ref. Nos. 208, 211, 212, 213). Claim 223 further requires that the processor be operable to receive payment in real time from the employer through the payment interface based upon the occurrence of mutual consent (Paragraph 14, Line 9 to Page 16, Line 10; Fig. 1, Ref. Nos. 110, 120, 140).

6. GROUNDS OF REJECTION TO BE REVIEWED ON APPEAL

Whether Claims 5, 6 and 10 are unpatentable under 35 U.S.C. §112, second paragraph, as being indefinite for failing to particularly point out and distinctly claim the subject matter of the invention based upon use of the term "said requesting party".

Whether Claim 208 is unpatentable under 35 U.S.C. §112, second paragraph, as being indefinite for failing to particularly point out and distinctly claim the subject matter of the invention based upon use of the term "the opportunity".

Whether Claims 5, 6, 10, 200 and 204 are unpatentable under 35 U.S.C. §103(a) over Walker in view of Pineda and in further view of Phatak.

Whether Claim 14 is unpatentable under 35 U.S.C. §103(a) over Walker in view of Pineda and in further view of Phatak.

Whether Claim 17 is unpatentable under 35 U.S.C. §103(a) over Walker in view of Pineda and in further view of Phatak.

Whether Claim 209 is unpatentable under 35 U.S.C. §103(a) over Walker in view of Pineda and in further view of Phatak.

Whether Claim 214 is unpatentable under 35 U.S.C. §103(a) over Walker in view of Pineda and in further view of Phatak.

Whether Claim 221 is unpatentable under 35 U.S.C. §103(a) over Walker in view of Pineda and in further view of Phatak.

Whether Claim 223 is unpatentable under 35 U.S.C. §103(a) over Walker in view of Pineda and further view of Phatak.

7. THE RELEVANT LAW

A finding of obviousness must be based on four underlying factual determinations:

(1) The scope and content of the prior art;

(2) The differences between the prior art and the claimed invention;

(3) The level of ordinary skill in the art; and

(4) Objective considerations of non-obviousness such as commercial success, long felt but unmet need, failure of others to make the invention, and the like. See *Graham v. John Deere Co.*, 148 U.S.P.Q. 459 (1966). Failure to make these determinations precludes the making of a prima facie case of obviousness.

The Patent Office must make the necessary findings and provide an administrative record showing the evidence on which its findings are based and its reasoning in reaching its conclusion. See *In re Zurko,* 258 F.3d 1379, 59 U.S.P.Q.2d 1693, 1697 (Fed. Cir. 2001). When patentability turns on the question of obviousness, the search for and analysis of the prior art must include evidence relevant to the finding of whether there is a teaching, motivation or suggestion to select and combine the references relied on as evidence of obviousness. See *In re Sang Su Lee,* 277 F.3d 1338, 61 U.S.P.Q.2d 1430 (Fed. Cir. 2002) citing *McGinley v. Franklin Sports, Inc.*, 262 F.3d 1335, 60 U.S.P.Q.2d 1001, 1008 (Fed. Cir. 2001). There must be a reason to combine the references. The reason to combine references must be based on objective evidence of record. A showing of a suggestion, teaching or motivation to combine the prior art references is an essential component of an obviousness holding. *C. R. Bard, Inc. v. M3 Systems, Inc.*, 157 F.3d 1340, 48 U.S.P.Q.2d 1225, 1232 (Fed. Cir. 1998).

Particular findings must be made as to the reason why a skilled artisan with no knowledge of the claimed invention would have selected the components for combination in the manner claimed. *In re Kotzab*, 217 F.3d 1365, 55 U.S.P.Q.2d 1313, 1317 (Fed. Cir. 2000). The Patent Office must identify specifically the principal, known to one of ordinary skill that suggests the claimed combination. *In re Rouffet*, 149 F.3d 1350, 47 U.S.P.Q.2d 1453, 1459 (Fed. Cir. 1998). The Patent Office must explain the reasons why one of ordinary skill in the art would have been motivated to select the references and to combine them to render the claimed invention obvious. Further, the Patent Office can satisfy the burden of showing obviousness of the combination only by showing some objective teaching in the prior art or that knowledge generally available to one of ordinary skill would lead that individual to combine the relevant teachings of the references. See *In re Fritch*, 972 F.2d 1260, 23 U.S.P.Q. 1780, 1783 (Fed. Cir. 1992). The factual question of motivation is material to patentability and cannot be resolved on subjective belief and unknown authority. It is improper, in determining whether a person of ordinary skill would have been led to this combination of references simply to "use that which the inventor taught against the teacher." *W. L. Gore v. Garlock, Inc.*, 721 F.2d 1540, 220 U.S.P.Q. 303, 312-13 ((Fed. Cir. 1983). The Patent Office must examine the relevant data and articulate a satisfactory explanation for its action or position including a rational connection between the facts found and the choice made. *Motor Vehicles Manufactures Association v. State Farm Mutual Automobile Ins. Co.*, 463 U.S. 29, 43 (Sup. Ct. 1983).

Where a trade off between features is required to produce an invention from a combination of references, motivation to combine requires the tradeoff be desirable not just feasible. See *Winner International Royalty Corp. v. Wang*, 202 F.3d 1340, 53 U.S.P.Q.2d 1580 (Fed. Cir. 2000).

It is improper to apply an obviousness to try standard or indulge in hindsight evaluation or reconstruction. See *Ecolochem, Inc. v. Southern California Edison Co.*, 227 F.3d 1361, 56 U.S.P.Q.2d 1065 (Fed. Cir. 2000).

It has been held that supporting a rejection on common knowledge and common sense is inappropriate. Reference to common knowledge without evidence in support or explanation in support is inappropriate. See *Smiths Industries Medical Systems, Inc. v. Vital Signs, Inc.*, 1836 F.3d 1347, 51 U.S.P.Q.2d 1415, 1421 (Fed. Cir. 1999). Failure to articulate an appropriate reason for the rejection is fatal to the position of obviousness. The Patent Office cannot merely make conclusory statements when dealing with particular combinations of prior art but must set forth the rationale on which it relies. *In re Sang Su Lee*, supra. Thus, it is improper to state a combination is within ordinary skill in the art without support.

An appropriate analysis in the determination of obviousness may not indulge in the forbidden hindsight evaluation. "Our case law makes clear that the best defense against the subtle but powerful attraction of a hindsight-based obviousness analysis is rigorous application of the requirement for a showing of the teaching or motivation to combine prior art references. *In re Dembiczak,* 175 F.3d 994, 50 U.S.P.Q.2d 1614, 1617 (Fed. Cir. 1999). It has also been held that teachings of references can be combined only if there is some suggestion or incentive to do

so. See *ACS Hosp. Sys., Inc. v. Montefiore Hosp.*, 732 F.2d 1572, 221 U.S.P.Q. 929, 933 (Fed. Cir. 1984).

Reasoned findings are critical to the performance of an agency's functions and judicial reliance on agency findings. Absent reasoned findings based on substantial evidence, effective review would become lost in the haze of so called expertise. See *Baltimore and Ohio Railroad Co., v. Aberdeen & Rockfish Railroad Co.*, 393 U.S. 87, 91-92 (Sup. Ct. 1968).

Another important consideration in the determination of obviousness is who is one of ordinary skill in the art and what is the level of ordinary skill in the art. One cannot determine if an invention would have been obvious to one of ordinary skill in the art without determining who that person would be. Several factors are evaluated to determine the level of ordinary skill. Those factors include: 1) the types of problems encountered in the art; 2) the prior art solution to those problems; 3) the rapidity of innovation; 4) the sophistication of the technology; and 5) the educational level of active workers in the field. See *Ruiz v. A.B. Chance Co.*, 234 F.3d 654, 57 U.S.P.Q.2d 1162 (Fed. Cir. 2000).

The Examiner must review all prior art even that art which will not support the rejection. See Section 706 *MPEP* and *Panduit Corp. v. Dennison Mfg. Co.,* 774 F.2d 1082, (Fed. Cir. 1985). Further, the Patent Office cannot pick and choose between references or teachings in references. See *In re Wesslau,* 353 F.2d 238 (CCPA 1965). See also *Dennison Mfg. Co. v. Panduit Corp.,* 475 U.S. 809, 106 S.C.T. 1578, 89L.Ed. 2 D 817 (S.CT. 1986).

The court in *Gillette Company v. S.C. Johnson & Son, Inc.,* 919 F.2d 720 (Fed. Cir. 1990) held that it is improper to focus on the obviousness of substitutions and differences instead of on

the invention as a whole. The court also held that obvious to try is not the appropriate standard, that the disclosure must contain a sufficient teaching of how to obtain the desired result or that the claimed results would be obtained if certain directions were pursued. Obviousness to try is not the appropriate standard under 35 U.S.C. 103.

The Federal Circuit has also held in *In re Peterson,* 315 F.3d 1325 (Fed. Cir. 2003), that an applicant may rebut a prima facie case of obviousness by showing that the prior art teaches away from the claimed invention in any material respect. See, also, *In re Geisler,* 116 F.3d at page 1469 (Fed. Cir. 1997) and *In re Malagari,* 499 F.2d at page 1333 (CCPA 1974).

See, also, MPEP §§ 2142, 2143, 2144 and 2145.

8. ARGUMENTS

Claims 5, 6, 10, 14, 17, 200, 204, 205, 208, 209, 214, 221 and 223 are on appeal. In accordance with the Final Office Action dated November 8, 2006, the appealed claims have been rejected on the following basis.

35 U.S.C. §103 Rejections

Claims 5-8, 10-12, 14, 15, 17, 200, 204, 205, 209, 214, 221 and 223 stand rejected under 35 U.S.C. §103(a) as being unpatentable over Walker et al U.S. Patent No. 5,884,270 (the Walker reference) in view of Pineda et al International Publication No. WO01/82158 A2 (the Pineda reference) and further in view of Phatak U.S. Patent Application Publication No. US2001/0042038 A1 (The Phatak reference). The Phatak reference was newly cited in the Final Office Action.

35 U.S.C. §112 Rejections

Claims 5, 6, 10 and 208 stand rejected under 35 U.S.C. §112, second paragraph, as being indefinite for failing to particularly point out and distinctly claim the subject matter which Applicant regards as the invention. Claims 5, 6 and 10 stand rejected as being indefinite with respect to the recitation of the limitation "said requesting party" in independent Claim 5, and Claim 208 stands rejected as being indefinite with respect to the recitation of the phrase "the opportunity" as used in said claim.

Applicant's Summary Position

Except for Claim 208 which stands rejected solely on the basis of 35 U.S.C. §112, the Examiner has taken the position that all of the remaining appealed claims would be obvious to a person skilled in the art based upon the disclosures in 3 separate prior art references, namely, the

Walker, Pineda and Phatak references as hereinafter further explained in detail below. The obviousness rejections must be reversed, among other things, for the following reasons: (1) several limitations associated with each independent claim on appeal are not disclosed, taught or even suggested by the prior art references; (2) the prior art teaches away from several claimed elements associated with the claims on appeal; (3) the Examiner has not established a Prima Facie case of obviousness pursuant to MPE §2143 in that besides the prior art teaching away from some of the claimed limitations, there is no suggestion or motivation in the prior art to modify the references or to combine such reference teachings in the manner as proposed by the Examiner, and (4) the reasonable expectation of success of such combination is not found in the prior art. See, *In Re Vaeck*, 947 F.2d 488, 20 USPQ 2d 1438 (Fed. Cir. 1991). Instead, the Examiner is using hindsight and Applicant's disclosure to establish the obviousness argument. The very fact that the claim invention is within the capabilities of one of ordinary skill in the art is not sufficient by itself to establish Prima Facie obviousness. There must be some objective reason to combine the teachings of the references.

A brief summary of each of the cited prior art references is provided below as well as a detailed discussion of such references as applied to each of the appealed claims.

The Cited Walker Reference

The Walker reference discloses a system for controlling the release of confidential or sensitive information of at least one of the parties involved in an anonymous communication. This control and anonymity is accomplished in several ways, for example, by encrypting communications between the parties; by establishing a communications channel between the party and requestor while not revealing the identity of the party and/or requestor to each other; and, importantly, by establishing first party and second party rules which must be met before

Monster Worldwide, Inc. Exhibit 1010 (p.153/1328)

releasing the identity of either party. See, Column 4, Lines 35-37, 63-66; Column 5, Lines 5-30; Column 7, Lines 23-30; Column 8, Lines 7-15; Column 9, Lines 6-22; Fig. 5, 530; Fig. 8. The Walker system receives from a first party first data including the identity of the first party and it also receives at least two first party rules for releasing the first data including a rule for releasing the identity of the first party. Similar information is gathered from the second party including receiving from the second party at least two second party rules for releasing the second party data including a rule for releasing the identity of the second party. The Walker system is then operative to transmit the identity of the first party to the second party based upon satisfying the first party rule for releasing the identity of the first party and upon satisfying the second party rule for releasing the identity of the second party. This release of contact information is controlled by the central controller 200 and does not require receiving a response from either the first party or the second party during the process if the first and second party rules are met. Instead, if the first and second party rules are met, the central controller will automatically release the search results and if the first and second party rules for releasing the identity of those parties are likewise met, the central controller 200 will automatically release the identity of the first and second parties. See, Column 8, Lines 27-31 and Lines 41-49; Column 8, Line 61 to Column 9, Line 5. This method and procedure is clearly set forth in Claim 1 of the Walker reference.

The mutual agreement between the parties as to the release of contact information in the Walker method is therefore based solely upon pre-determined rules which are entered into the central controller by each of the respective parties. The mutual consent is based upon the pre-determined first and second party rules for releasing such information. In fact, all of the independent claims of the Walker reference require the establishment of first and second party

rules for releasing the identity of each respective party. The Examiner's cite to Walker, Column 7, Lines 24-41 supports this pre-authorized release of contact information through the use of first and second party rules. This is totally different from Applicant's invention wherein an affirmative response is required from the non-requesting party for each request for the release of contact information as will be hereinafter further explained.

The Walker method and system also allows the first and second parties to communicate directly with each other in an anonymous fashion. This is verified by the Examiner's cite to Walker, Column 21, Line 58 through Column 22, Line 9. This is totally different from Applicant's invention wherein no direct contact between the candidate and the employer, or between the first and second party, occurs until after there has been an exchange of contact information.

Also, importantly, as indicated by the Examiner in the outstanding Office Action, the Walker reference does not disclose obligating payment due from an employer in real time to a career site operator. Instead, the Examiner relies upon the Pineda reference for this claimed feature.

The Cited Pineda Reference

The Pineda reference discloses a method for matching which allows a candidate to enter profile data, including identification data, and to match their criteria and then view available job postings. The system further allows an employer to search profile data corresponding to a plurality of candidates and returns search results corresponding to candidates who match the search criteria. After search results have been displayed, the employer can review certain portions of each candidate's profile data and the employer can then authorize a payment for each candidate for whom the employer would like to receive the identification data so that they can

Monster Worldwide, Inc. Exhibit 1010 (p.155/1328)

make contact with the candidate through their normal hiring process. This system again does not require mutual consent between the candidate and employer for each specific request and the release of contact information is automatic once the employer authorizes payment. See, Page 12, Line 14 to Page 13, Line; Page 18, Lines 3-23. No response from the non-requesting party is necessary to release the contact information of that party. It is payment of the fee by the employer which unlocks the identification and contact data. In fact, all of the independent claims of the Pineda reference require providing the employer with the requested identification data based upon receiving a request from the employer for such identification data and charging a fee to the employer for such data. See, Claims 1, 10, 12, 14 and 21. Only the employer in Pineda is asked regarding the release of contact information. As set forth and explained in more detail below, the Pineda employment system and method, among other things, does not obtain mutual consent from both the candidate and the employer for the release of contact information; and it does not check the attributes of the requesting party against the minimum requirements of the non-requesting party.

The Cited Phatak Reference

The Phatak reference discloses a method and system for selecting a resource wherein the system rates the candidates on their overall fitness to fill certain positions taking into consideration their skills, availability, salary and other factors. The Phatak system is an auction type system wherein offers are received to provide candidate resources to fill certain resource requirements in an auction environment. The auction system uses a rating algorithm to identify how closely each candidate matches the job requirements. See, Paragraph 0026. When the auction is closed, the auction system notifies the employer of those candidates with the highest ratings. The employer can then use a web-based interview system to arrange an interview with

Monster Worldwide, Inc. Exhibit 1010 (p.156/1328)

the candidates. Employers input their job requirements and can identify specific attributes associated with a candidate of choice and these qualifications and attributes are submitted in bid form. The employer enters various weight factors associated with each attribute, which weight factors are used to identify relative importance of the factors in the calculation of the match rating. See, Paragraph 0028. Based upon the number of bids provided to the system for available candidates, the Phatak system generates a match rating between the candidate attributes and the target attributes of the particular job requirements and selects candidates based on the generated match ratings. Although the Phatak system looks at maximum and minimum requirements set by the employer for a particular job position, it merely rates the candidate attributes as compared to the job requirements. See, Paragraphs 0027, 0042 to 0054, and Figs. 6B and 14-19. It does not determine if the attributes of the candidates satisfy the minimum requirements of the employer and, importantly, it makes no determination as to whether any of the attributes of the employer or job requirements satisfy minimum requirements of the candidate. Only providers, such as employment agencies, submit bids and the candidate itself does not participate in this auction process. See, paragraph 0033 and 0035. Candidates are not directly involved in the Phatak system and, as a result, there is no direct exchange of information between the candidate and employer. Also, importantly, the Phatak system always generates a match rating regardless of whether the candidate attributes satisfy the job requirements. See, Paragraphs 0026 and 0042. This is not true of the present invention wherein if the attributes of either one of the requesting candidate or employer does not satisfy the minimum requirements of the non-requesting candidate or employer, no release of contact information occurs. The Phatak system makes no comparison or determination as to whether the minimum requirements of the candidate are satisfied by the employer.

Rejection of Claims 5, 6 and 10 Under 35 U.S.C. §112

Claims 5, 6 and 10 stand rejected under 35 U.S.C. §112 as being indefinite with respect to the recitation of the limitation "said requesting party" in independent claim 5. It is respectfully submitted that claim 5 is not indefinite based upon the language "said requesting party" as claim 5 specifically sets forth receiving a search request from either the candidate or the employer and specifically refers to receiving at least one request for release of contact information from the requesting one of said candidate and said employer. Independent claim 5 is therefore very clear as to one of either the candidate or the employer requesting a search and either one of the candidate or employer requesting the release of contact information. As a result, since only one of the two parties in claim 5 is requesting the release of contact information, such party is the requesting party and such party is one of either the candidate or the employer. In fact, claim 5 specifically addresses determining that the attributes of the requesting one of said candidate and said employer satisfy the minimum requirements of a non-requesting candidate or employer. As a result, independent claim 5 clearly establishes both a requesting and a non-requesting party and the use of the term "said requesting party" in one limitation of claim 5 has proper antecedent basis when the entire claim is taken into context. Although this rejection is easily correctible and Applicant would be glad to replace the language "said requesting party" with new language - - - "said requesting candidate or employer" - - -, Applicant believes that the language of claim 5 is proper and does provide antecedent basis for this limitation.

Claims 6 and 10 depend from independent claim 5 and are rejected under 35 U.S.C. §112 based upon the same rationale relied upon for independent claim 5. The same argument applies to dependent claims 6 and 10.

Rejection of Claim 208 Under 35 U.S.C. §112

Claim 208 stands rejected solely under 35 U.S.C. §112 as being indefinite with respect to the recitation of the phrase "the opportunity" as used in claim 208. Claim 208 is not indefinite based upon the use of the phrase "the opportunity" when claim 208 is read in its entirety. More specifically, Claim 208 specifically requires that if the attributes of the requesting one of the candidate and employer do not satisfy minimum requirements of the non-requesting candidate or employer, then the present method communicates to the requesting candidate or employer that the at least one attribute of the requesting party does not satisfy the minimum requirements of the non-requesting party. Claim 208 offers the opportunity to the requesting candidate or employer to change its at least one non-satisfying attribute so as to satisfy the minimum requirements of the non-requesting party. The use of the phrase "the opportunity" is taken out of context and should be read in its entirety. Claim 208 is offering the opportunity to change the requesting candidate's or employer's at least one non-satisfying attribute so as to satisfy minimum requirements. The plain reading of claim 208 clearly establishes the meaning of the phrase "the opportunity" and does provide sufficient antecedent basis for the use and understanding of this phrase in claim 208. Also, importantly, claim 208 is substantially identical to claims 210, 215 and 222, all of which claims have been indicated as containing allowable subject matter and all of which claims use the same phrase "the opportunity". Withdrawal of this rejection is respectfully requested.

Rejection of Claims 5, 6, 10, 200 and 204 Under 35 U.S.C. §103

Claims 5, 6, 10, 200 and 204 stands rejected under 35 U.S.C. §103(a) as being unpatentable over Walker (U.S. Patent No. 5,884,270) in view of Pineda (PCT Publication No.

W001/8218582) and further in view of Phatak (U.S. Patent Application Publication 2001/0042038).

As clearly set forth in Claim 5, the present method requires obtaining attributes and minimum requirements for both the plurality of candidates and the plurality of employers, and that these attributes and minimum requirements be stored in a candidate database and an employer database in a searchable format. Attributes and requirements as applied to candidate and employer profiles are clearly defined in the specification at pages 10, 19, 24, 25, 28, 41, 54, 56, 62, 63 and elsewhere and, although some attributes may be requirements and some requirements may be attributes, these two terms are not synonymous and may include different criteria. Background information associated with candidate-capability attributes is received in a structured format. See, Figs. 2 and 3. Job description information is received from employers in a structured format. See, Figs. 2, 8 and 9.

Once the attributes and minimum requirements of both the candidate and the employer are entered into the appropriate databases, Claim 5 requires receiving a search request from either a candidate or an employer to search the searchable profile of one of the candidate and employer databases for a possible employment opportunity based upon certain search parameters. Once the search request has been processed, the results of the search are provided to the requesting one of either the candidate or the employer. For example, a candidate may request a search for all aerospace engineering jobs in the St. Louis area. The results of this search would be provided to the candidate wherein the job opportunities would be described but the employer's identity and/or contact information associated with each such aerospace engineering job in the St. Louis area would not be released. If the requesting party, in this case the candidate, requests the release of contact information for at least one of the job opportunities found in the

Monster Worldwide, Inc. Exhibit 1010 (p.160/1328)

search, the present method then makes a further determination that the attributes of the requesting party, in this case the candidate, actually satisfy the minimum requirements established by the non-requesting party, in this case the employer, for the specific job identified in the search results and listed in the employer database. In the example given, the employer may require that the candidate have 5 years experience in the industry with specific experience in engine design. According to Claim 5, the present method would therefore take the employer's minimum requirements that an appropriate candidate have 5 years experience in the industry and have engine design experience and search the candidate's attributes to see if the candidate meets these minimum requirements. If the candidate does not satisfy the minimum requirements established by the employer as required by Claim 5, the candidate is then sent a message indicating that the candidate is not qualified for submitting his/her contact information for the employment opportunity requested. This method and procedure is clearly set forth in Figs. 4, 7A and 7B of the present application for the candidate (specification starting at page 57) and in corresponding Fig. 10 for the case where the employer initiates the search request (specification starting at page 75). In the example given above where our candidate does meet the minimum requirements of the employer, Claim 5 then specifically requires that a response must be received from the non-requesting employer consenting to the release of the candidate's contact information to the employer. Clearly, the determining step where the present method determines whether the attributes of the requesting party satisfies the minimum requirements of the non-requesting party is not disclosed in any of the cited prior art references including the Walker, Pineda and Phatak references. Claim 5 requires the affirmative consent of the non-requesting party to the release of the candidate's contact information.

Walker merely discloses that once the search results have been transmitted, if the first and second party rules for releasing their respective identities are satisfied, the exchange of contact information automatically takes place. There is no further determination with respect to comparing attributes and minimum requirements, nor is there any specific communication with the non-requesting party to receive a specific response from that non-requesting party consenting to the release of contact information. According to the Walker disclosure, consent is automatic if the first and second party rules are satisfied.

The Examiner relies upon Column 5, Lines 5-18 for disclosure in the Walker reference as to receiving a request for release of contact information from either the candidate or the employer and Column 7, Lines 24-41 and Column 21, Line 58, through Column 22, Line 9 of Walker to establish that there is a determination with respect to mutual consent for the release of contact information. The Examiner goes on to state that it is implied in Walker that there must be mutual agreement between the parties before any information is released. A clear and precise reading of Columns 5, 7, 21 and 22 of Walker clearly shows that if the first and second party rules are satisfied, contact information is automatically transmitted. See, Column 5, Lines 23-30; Column 8, Lines 7-14; Column 8, Lines 27-31; Column 8, Lines 41-50; Column 8, Lines 61-65; Column 9, Lines 1-5. This is totally different from what is required in Claim 5 wherein Claim 5 specifically requires receiving a response from non-requesting candidate or employer consenting to the release of contact information. There is no automatic transfer of contact information unless a specific affirmative response is received by the non-requesting party. This is not always true with respect to the Walker reference and this feature of Walker is clearly defined in all of the independent claims of the Walker reference wherein, for example, Claim 1 of the Walker reference, specifically recites that, "upon satisfying said first party rule for releasing said identity

Monster Worldwide, Inc. Exhibit 1010 (p.162/1328)

of said first party, transmitting said identity of said first party to said second party, and after said exchanging step, upon satisfying said second party rule for releasing said identity of said second party, transmitting said identity of said second party to said first party".

Applicant's system as recited in Claim 5 is more sophisticated than the Walker system and it not only transmits the results of the search based upon the search parameters, but it further makes additional determinations that all of the minimum requirements of the non-requesting party are satisfied before requesting mutual consent to the release of contact information. This series of steps is clearly missing from the Walker system and, for this reason alone, the present method as defined in Claim 5 is clearly and patentably distinguishable over the disclosure in the Walker reference.

Still further, the Walker method likewise establishes anonymously direct communications between the parties before the release of contact information. See, Column 7, Lines 25-31; Column 9, Lines 6-22. This teaches directly against the present invention as defined in Claim 5 wherein Claim 5 specifically recites that the authorized exchange of information between candidate and employer occurs prior to any direct contact between said candidate and said employer. Here again, for this reason alone, Claim 5 is again clearly and patentably distinguishable over the disclosure in the Walker reference.

Claim 5 continues to further require obligating a payment due in real time based on the response to the request for release of information wherein the payment is due to a career site operator and thereafter providing the exchange of contact information in real time prior to any direct contact between the candidate and the employer. The Examiner has admitted that the Walker reference fails to expressly disclose obligating payment due from the employer and cites Pineda for the proposition of disclosing charging a fee to an employer. More particularly, Pineda

Monster Worldwide, Inc. Exhibit 1010 (p.163/1328)

specifically requires that the employer pay a fee before any release of contact information. See, Page 12 of the Pineda publication starting at Line 25 through Page 13, Lines 1-2 and Lines 16-18. See also, Fig. 4 of Pineda. This is not true with respect to the method of Claim 5 wherein either the candidate or the employer will be obligated a payment due in real time as soon as a positive response is received from the non-requesting party consenting to the release of contact information to the requesting party. In Claim 5, upon receipt of consent to the release of contact information, obligation of the payment is immediately made and the exchange of contact information is thereafter immediately made in real time. This payment sequence in combination with the other steps of Claim 5 clearly and patentably distinguishes Claim 5 over both the Walker reference and the Pineda reference, either alone or in combination with each other.

It is also important to note that the Pineda reference likewise does not require mutual consent between the candidate and the employer for each specific request for contact information; it does not require a specific response from the non-requesting party to release that party's contact information; and the release of contact information is automatic once the employer authorizes payment. It is payment of the fee by the employer which triggers the release of contact information, not mutual consent or an affirmative response from the non-requesting party to release that party's contact information. Still further, there is no disclosure in the Pineda reference with respect to making a determination as to whether the attributes of the requesting party satisfy the minimum requirements of the non-requesting party. As a result, even if the Walker and Pineda references are combined, and even if this Board takes the position that Pineda does disclose obligating a payment based on the response to a request for release of contact information , this combined system still does not disclose, teach or even suggest the key elements of Claim 5, namely, determining that the attributes of the requesting party satisfies

minimum requirements of the non-requesting party, and receiving an affirmative response from the non-requesting party consenting to the release of contact information to the requesting party in all situations. All of the claims of the Pineda reference clearly disclose and recite that it is only the employer who requests to receive identification data for at least one matched candidate and that payment of a fee is based solely upon the employer's request for contact information and no response from the non-requesting party is required.

Claim 5 specifically requires a separate determination step to ensure that the attributes of the requesting party satisfy the minimum requirements of the non-requesting party; that a very specific response be received from the non-requesting party consenting to the release of contact information (not just an automatic release based upon party rules or based upon payment of a fee by the employer); an immediate obligation of a payment in real time to either party; and the exchange of contact information occurs in real time and, importantly, prior to any direct contact between the candidate and the employer. These are very different and distinguishable steps as compared to both the Walker and Pineda references. For these and other reasons, Claim 5 is clearly and patentably distinguishable over both the Walker and Pineda references, either alone or in combination.

In Paragraph 10 of the Final Office Action dated November 8, 2006, the Examiner states that he disagrees with Applicant's arguments with respect to the Walker reference for the specific reason that the first party and second party are not recited in the rejected claims. It is respectfully submitted that although that Walker reference uses the terms "first party" and "second party", these terms are comparable to Applicant's use of the terms "candidate" and "employer". All of the independent claims on appeal specifically state that there is no direct contact between the candidate (first party) and employer (second party) prior to the release of

Monster Worldwide, Inc. Exhibit 1010 (p.165/1328)

contact information. Applicant does not understand the Examiner's rationale in this regard. Walker allows direct communication between a first party and a second party, namely, between a candidate and an employer, whereas all of the independent claims on appeal specifically recite that there is no direct contact between the candidate and the employer until after there has been an exchange of contact information.

Furthermore, the Examiner admits in the final rejection that the combination of Walker and Pineda fails to explicitly disclose . . . receiving a search request from either said candidate or said employer to search the searchable profile of one or more of the candidate and employer databases for a possible employment opportunity based upon certain parameters, and that the attributes of the requesting one of said candidate and said employer satisfy the minimum requirements of a non-requesting candidate or employer stored in the candidate and employer databases. See, Page 4 of Final Office Action. The Examiner has taken the position that the Phatak reference discloses a method for conducting an auction for resources wherein the Phatak method determines that the attributes of the candidate and the employer satisfy minimum requirements. The Examiner cites to Paragraphs 0035, 0044 and 0045 of the Phatak reference for this disclosure. The Examiner also states that it would have been obvious to a person of ordinary skill in the art to allow an employer to advertise the desired skills of the job candidate along with other attributes.

In brief, the Phatak reference discloses an auction system wherein the resource system receives resource requirements that include target attributes; it receives offers to provide candidate resources to fill the resource requirements in an auction environment; each candidate resource has candidate attributes that specify the characteristics of the candidate resource; and the resource system generates a match rating for each candidate resource that indicates how

closely the candidate attributes match the target or job requirements. See, Paragraph 0025. The Phatak system then uses the match ratings to select a candidate resource whose candidate attributes best match the target attributes. No mutual consent for release of contact information is associated with the Phatak system; no candidate interaction or other involvement is associated with the Phatak system; and although minimum and maximum requirements are compared, no determination with respect to satisfying minimum requirements is made. Instead, the Phatak auction system uses a rating algorithm to identify how closely each candidate matches the job requirement. See, Paragraph 0026. Only providers, not candidates, submit bids to the Phatak auction system and the candidate itself does not participate at all. See, Paragraphs 0033 and 0035. Therefore, there is no direct exchange of information between the employer and the candidate, and there is nothing approaching a consent that is specific to the transaction. Instead, the candidate is represented by the employment agency which makes the ultimate disclosure decision. Also, importantly, the Phatak system always generates a match rating regardless of whether the candidate attributes satisfy the job requirements. See, Paragraphs 0026 and 0042. There is no determination in the Phatak system as to whether any of the attributes of the employer or the job requirements actually satisfy minimum requirements set by the candidate. It only compares candidate attributes to minimum or maximum job requirements. As a result, not only does the Phatak system not determine that the candidate attributes meet the minimum requirements of the employer, importantly, the Phatak system makes no comparison or determination as to whether the minimum requirements of the candidate are satisfied by the employer. Claim 5 works both ways. Instead, Phatak allows both unsatisfied candidates to be submitted to an employer presumably with a low algorithm score, and it allows the submission of candidates to unqualified employers.

The Examiner refers to Paragraph 0044 and 0045 of Phatak. These paragraphs refer to Fig. 15 which is merely a flow diagram illustrating one example of how a calculation for the skills of a candidate is made. Here again, although skill requirements are compared, only a match rating is generated to identify how closely the candidate matches the job requirements. There is no positive determination that the candidate attributes satisfy all minimum requirements of the employer; and there is no determination of candidate minimum requirements with employer attributes as required by Claim 5. Merely allowing an employer to advertise the desired skills of the job candidate along with other attributes does not satisfy the requirements of Claim 5.

Still further, the present method as defined in Claim 5 is not an auction process or a reverse auction process. The method of Claim 5 allows both employers and candidates to use the system and to submit search requests. The Phatak reference only allows providers, such as employment agencies, to submit a bid to provide a candidate for that particular job. See, Paragraph 0033. Also, the provider component of Fig. 8, Ref. No. 806, coordinates the registering of candidates and the placing of bids on jobs whose auction is open solely by agencies and not by candidates. There is no participation or interaction between the Phatak system and the candidate itself. The present system uses no matching rating or rating algorithm to identify how closely each candidate matches the job requirements. Instead, the method of Claim 5 makes a determination as to whether the attributes of the requesting party, either the candidate or the employer, satisfy the minimum requirements of the non-requesting party, either the candidate or employer, stored in the candidate and employer databases. If minimum requirements are satisfied, the method of Claim 5 then looks for receiving a response from the non-requesting candidate or employer consenting to the release of contact information. There is

no disclosure, teaching, or suggestion in the Phatak system that an affirmative response from the non-requesting candidate or employer will be received consenting to the release of contact information before any information is actually released. The Phatak system merely rates bid offers for a particular job and submits those ratings to the employer only. This is totally different from the requirements of Claim 5. As a result, even if the Phatak reference is combined with both the Walker and Pineda references, there is still no disclosure, teaching or suggestion that a positive, affirmative response from the non-requesting party is always required consenting to the release of contact information; that a positive determination be made that the attributes of the requesting party satisfy the minimum requirements of the non-requesting party; and that a payment is obligated based upon an affirmative response to the request for release of contact information. None of these features are disclosed by the cited Walker, Pineda and Phatak references, alone or in any combination.

Claims 6, 10, 200 and 204 will stand or fall with independent Claim 5.

Rejection of Claim 14 Under 35 U.S.C. §103

Claim 14 stands rejected under 35 U.S.C. §103(a) as being unpatentable over Walker (U.S. Patent No. 5,884,270) in view of Pineda (PCT Publication No. W001/8218582) and further in view of Phatak (U.S. Patent Application Publication 2001/0042038).

Claim 14 is directed to a network for facilitating the exchange of contact information and such claim includes many of the limitations set forth and described above with respect to independent Claim 5. In this regard, Claim 14 specifically requires that the network include means for storing candidate and employer attributes and requirements in separate databases and that at least a portion of the candidate database and a portion of the employer database are searchable by either the candidate and the employer; means for processing a search request from

Monster Worldwide, Inc. Exhibit 1010 (p.169/1328)

either the candidate or the employer and providing the results of such search to the requesting party; means for receiving a request for release of contact information from the requesting party based upon the search results; and, importantly, further means for determining that the attributes of the requesting party satisfy the minimum requirements of the non-requesting party. Here again, as explained above with respect to Claim 5, none of the cited prior art references including the Walker, Pineda and Phatak references disclose this determination mechanism to ensure that all of the attributes of the requesting party stored in the appropriate database satisfy at least the minimum requirements of the non-requesting party stored in that appropriate database. This eliminates the possibility of initially matching up candidates with employers only to find out that the candidates do not have the requisite minimum requirements that the employer is looking for and, vice versa, that the employer does not meet the minimum requirements of the candidate such as location, certain minimum salary, certain benefits, and so forth. This extra determination requirement is, among other things, not disclosed in the cited prior art for all of the reasons discussed above with respect to Claim 5.

Still further, Claim 14 requires that there be mutual consent for the release of contact information regarding the candidate; that the present network compute a payment fee in real time based on the mutual consent; that it obligate the payment fee in real time; that it provide means for collecting the fee in real time; and that it provide means for exchanging the contact information in real time prior to any direct contact between the candidate and the employer. For all of the reasons discussed above with respect to Claim 5, the Pineda reference does not disclose the payment process recited in Claim 14 including, importantly, means for collecting the payment fee in real time. None of the prior art references disclose any means whatsoever for obligating or collecting the payment fee in real time. See, specification Page 91, Lines 1-9; Fig.

Monster Worldwide, Inc. Exhibit 1010 (p.170/1328)

12, 1212. For all of these reasons, Claim 14 is clearly and patentably distinguishable over the cited Walker, Pineda and Phatak references, either alone or in combination. All of the structure, material or acts described in the specification as corresponding to each claimed means function has been set forth in Section 5 of this Appeal Brief entitled Summary of the Claimed Subject Matter.

Rejection of Claim 17 Under 35 U.S.C. §103

Claim 17 is rejected under 35 U.S.C. §103(a) as being unpatentable over Walker (U.S. Patent No. 5,884,270) in view of Pineda (PCT Publication No. W001/8218582) and further in view of Phatak (U.S. Patent Application Publication 2001/0042038).

Claim 17 is dependent upon Claim 14 and further requires that the mutual consent comprise means for receiving a response to the request for release of contact information from the non-requesting party. Here again, this is distinguishable over the Walker reference wherein release of contact information according to Walker occurs once the first and second party rules are met. The Walker exchange of information is automatic wherein Claim 17 specifically requires an affirmative response from the non-requesting party. Claim 17 is likewise distinguishable over the Pineda reference since the Pineda reference likewise does not disclose, teach or suggest any type of mutual consent between the candidate and employer for each specific request of contact information. Instead, the release of contact information is again automatic once the employer authorizes payment. No response from the non-requesting party is necessary to release the contact information of that party. It is the payment of the fee by the employer which releases the contact information. Still further, Claim 17 is distinguishable over the Phatak reference for the same reasons in that the Phatak reference does not require any type of an affirmative response from the non-requesting party for the release of contact information.

In fact, as indicated above, candidates do not participate in any way in the Phatak system and no affirmative response from a candidate is required. The Phatak merely rates the candidates on their overall fitness to fill a particular job position. Claim 17 is therefore clearly and patentably distinguishable over the Walker, Pineda and Phatak references, either alone or in any combination, and is certainly allowable in view of the fact that it includes all of the limitations of Claim 14 discussed above.

Rejection of Claim 209 Under 35 U.S.C. §103

Independent claim 209 stands rejected under 35 U.S.C. §103(a) as being unpatentable over Walker (U.S. Patent No. 5,884,270) in view of Pineda (PCT Publication No. W001/8218582) and further in view of Phatak (U.S. Patent Application Publication 2001/0042038).

Claim 209 is another independent claim along the lines of independent Claim 5 discussed above and containing many of the same distinguishing limitations as Claim 5, but Claim 209 is specifically directed to receiving a search request from the candidate only (not from either the candidate or employer) to search a searchable portion of the employer database for a possible employment opportunity. Like Claim 5, Claim 209 specifically requires that once a request is received from the candidate to submit the candidate's contact information to at least one employer based upon the search results, the present method further determines whether the attributes of the candidate satisfy the minimum requirements of the at least one employer. As previously discussed, this further screening process is not disclosed in the cited Walker, Pineda and Phatak references. Still further, Claim 209 specifically requires that the present method receive a response from the at least one employer stating that it does desire to receive the contact information of the candidate. Here again, this is not disclosed in the Walker reference wherein

Monster Worldwide, Inc. Exhibit 1010 (p.172/1328)

release of contact information is based solely upon first and second party rules which are predetermined and preauthorized by the first and second parties. Still further, Claim 209 specifically requires that the method determine that the attributes of the candidate satisfy the minimum requirements of the at least one employer. Here again, the Walker and Pineda references do not teach this limitation (See, acknowledgement by Examiner on Page 4 of Final Office Action) and the Phatak reference merely generates a match rating using a rating algorithm to identify how closely each candidate matches the job requirements. This rating occurs regardless of whether the candidate attributes satisfy the minimum requirements of the employer. This is not the determination step recited in claim 209 wherein such determination yields one of two possible results, namely, that the candidate attributes satisfy the minimum requirements of the employer, or that the candidate attributes do not satisfy the minimum requirements of the employer. Still further, Claim 209 specifically requires obligating a payment due in real time based on the employer's consent to receive the contact information of the candidate for each specific request and that the exchange of contact information take place thereafter. Here again, this is distinguishable over the Pineda reference for the reasons discussed above with respect to Claim 5. As such, Claim 209 is clearly and patentably distinguishable over the cited Walker, Pineda and Phatak references, either alone or in combination.

Rejection of Claim 214 Under U.S.C. §103

Independent Claim 214 stands rejected under 35 U.S.C. §103(a) as being unpatentable over Walker (U.S. Patent No. 5,884,270) in view of Pineda (PCT Publication No. W001/8218582) and further in view of Phatak (U.S. Patent Application Publication 2001/0042038).

Independent Claim 214 is patterned after Claim 209 and differs only in that it is the employer now requesting the search request. Claim 214 therefore contains the same distinguishing limitations as Claim 209 except that the candidate and employer roles have been reversed. As a result, Claim 214 likewise specifically requires determining that the attributes of the employer satisfy the minimum requirements of the at least one candidate; receiving an affirmative response from the at least one candidate that it desires to release the contact information to the employer; and for each specific response, obligating a payment due from the employer in real time to a career site operator. The Phatak system does not compare the attributes of the employer to the minimum requirements of the candidate. For all of the reasons discussed above with respect to Claim 209, Claim 214 is clearly and patentably distinguishable over the cited Walker, Pineda and Phatak references, either alone or in combination.

Rejection of Claim 221 Under 35 U.S.C. §103

Independent Claim 221 stands rejected under 35 U.S.C. §103(a) as being unpatentable over Walker (U.S. Patent No. 5,884,270) in view of Pineda (PCT Publication No. W001/8218582) and further in view of Phatak (U.S. Patent Application Publication 2001/0042038).

Independent Claim 221 contains many of the same distinguishing limitations as Claims 5, 14, 209 and 214 addressed above but is of somewhat different scope and is also believed to be in allowable condition for the same reasons discussed above with respect to Claims 5, 14, 209 and 214. More specifically, Claim 221 likewise specifically requires that the computer system (1) determine that the attributes of the requesting party satisfy the minimum requirements of the non-requesting party; (2) determine that there is mutual consent from both parties for the release of contact information regarding the candidate; and (3) obligates a payment due from the

Monster Worldwide, Inc. Exhibit 1010 (p.174/1328)

employer in real time based on the mutual consent for release of contact information. As clearly explained above, none of these features are disclosed, taught or even suggested in the Walker, Pineda and Phatak references, either alone or in any combination. In addition, there is no direct contact between the candidate and the employer prior to the exchange of contact information. This is not true of the Walker reference. Claim 221 is clearly and patentably distinguishable over the cited prior art.

Rejection of Claim 223 Under 35 U.S.C. §103

Dependent Claim 223 stands rejected under 35 U.S.C. §103(a) as being unpatentable over Walker (U.S. Patent No. 5,884,270) in view of Pineda (PCT Publication No. W001/8218582) and further in view of Phatak (U.S. Patent Application Publication 2001/0042038).

Claim 223 is dependent upon new independent Claim 221 and further requires that the present computer system include a payment interface operable to receive payment in real time from the employer based upon the occurrence of mutual consent. Here again, this feature is not disclosed in any of the cited prior art references including the Pineda reference. In addition, this feature in combination with the other novel features of independent Claim 221 further patentably distinguishes Claim 223.

Confusion With Respect to Claim 205

In the Final Office Action dated November 8, 2006, the Examiner has indicated in the Office Action Summary Sheet, Paragraph 7, that Claim 205 is merely objected to. In similar fashion, on Page 7 of the Final Office Action, in Paragraph 7, the Examiner has indicated that Claim 205 includes allowable subject matter and would be allowable if rewritten to include all of the limitations of the base claim and any intervening claims. However, in the first full paragraph on Page 7 of the Final Office Action, the Examiner appears to be rejecting Claim 205 on the

Monster Worldwide, Inc. Exhibit 1010 (p.175/1328)

basis of 35 U.S.C. §103 in that although the Examiner admits that the combination of Walker and Pineda fails to explicitly disclose the subject matter of Claim 205, the Examiner goes on to state that it would be obvious to a person of ordinary skill in the art to incorporate this feature into the disclosures of Walker and Pineda with the motivation to prevent an unauthorized candidate or employer from using the system. First, it is respectfully submitted that Claim 205 is substantially identical to objected Claims 211, 216 and 225, all of which claims include the same subject matter of Claim 205 and all of which claims have been indicated as containing allowable subject matter.

Still further, if the Examiner maintains the rejection of Claim 205 on the basis that it would be obvious to a person of ordinary skill in the art to incorporate this feature into the disclosures of Walker and Pineda with the motivation to prevent an unauthorized candidate or employer from using the system, this rationale and motivation is incorrect. To the contrary, the candidate and employer referred to in Claim 205 are already authorized candidates and employers. See, Figs. 3 and 8. The present system is directed to receiving responses from authorized candidates and employers once a request for contact information is issued. If an authorized candidate or an authorized employer does not respond to a previous request for release of contact information, then the present system does not allow such authorized parties to further interact with the system and receive additional search information until they have responded to all previous requests for contact information. This is clearly not shown in Walker, or Pineda or Phatak, and the Examiner has cited no other prior art for this proposition. The assumption that the present system is preventing unauthorized users from using the system is not the case. The present system is preventing authorized users from using the system if they have

not responded to a previous request. Claim 205 is therefore clearly and patentably distinguishable over the cited prior art.

As a result, none of the cited prior art references including the Walker, Pineda and Phatak references provide any teachings relating to the specific method steps and system features relating to determining whether certain attributes of the requesting party satisfy minimum requirements of the non-requesting party; receiving a specific response from the non-requesting party consenting to the release of contact information (not automatic transmittal based upon first and second party rules or payment of a fee); obligating a payment in real time based upon mutual consent; actually receiving payment in real time; and preventing an authorized candidate or employer from further interaction with the system if such candidate or employer has not responded to a previous request to provide a response to the release of contact information (Claim 205). More specifically, there is no teaching or suggestion in any one or more of the cited prior art references, alone or in any combination, which remotely suggests or even hints at the specific system features identified in the appealed claims. The system and method of the present invention is much more sophisticated and interactive with both the candidate and employer and provides a novel and useful method of doing business, and sets forth a patentably distinguishable computer system and method for authorizing information exchanged between at least one candidate and at least one employer prior to any direct contact between such candidate and employer.

With respect to independent Claims 5, 14, 214 and 221, it is respectfully submitted that none of the cited prior art references, namely, Walker, Pineda or Phatak, alone or in any combination, disclose, discuss, teach or even suggest that the attributes of an employer are compared to the minimum requirements of a candidate and a determination is made as to

Monster Worldwide, Inc. Exhibit 1010 (p.177/1328)

whether the attributes of the employer actually satisfy the minimum requirements of a candidate. This feature is required in independent Claims 5, 14, 214 and 221. This determination functions as a screening process for screening out employer inquiries that do not meet the minimum requirements of a candidate. At best, the Phatak reference merely compares the attributes of a candidate to the minimum job requirements of the employer. As discussed above, even though the Phatak system compares the attributes of a candidate to the minimum job requirements, it does not make a determination as to whether the candidate attributes actually satisfy the job requirements and, importantly, it makes no determination as to whether the minimum job requirements or employer attributes satisfy the minimum requirements of the candidate. For this reason alone, independent Claim 5, 14, 214 and 221 are clearly and patentable distinguishable over all of the cited prior art.

9. CONCLUSIONS

In view of the above arguments, the Appellant submits that the 35 U.S.C. §103 rejections of the pending claims are overcome and accordingly requests that the rejections be reversed. None of the cited prior art references including the Walker, Pineda and Phatak references, taken either alone or in any combination thereof, which combinations are objected to, provide any teachings relating to the specific method steps and system features relating to determining whether certain attributes of the requesting party satisfy minimum requirements of the non-requesting party; receiving a specific response from the non-requesting party consenting to the release of contact information (not automatic transmittal based upon first and second party rules or just paying a fee); obligating a payment in real time based upon mutual consent; actually receiving payment in real time; and preventing an authorized candidate or employer from further interaction with the system if such candidate or employer has not responded to a previous request to provide a response to the release of contact information. More specifically, there is no teaching or suggestion in any one or more of the cited prior art references, alone or in any combination, which remotely suggests or even hints at the specific system features identified in the presently pending claims. The system and method of the present invention is much more sophisticated and interactive with both the candidate and employer and provides a novel and useful method of doing business, and sets forth a patentably distinguishable computer system and method for authorizing information exchanged between at least one candidate and at least one employer prior to any direct contact between such candidate and employer. Forbidden hindsight has been used to support the obviousness rejections.

All of the limitations set forth in the Claims presently on appeal have support in the present application and in the drawings as indicated above.

All of the claims presently on appeal contain limitations which patentably distinguish them over the cited prior art. Allowance is hereby respectfully requested.

For the record, depending upon the outcome of this Appeal, Applicant hereby reserves his right to accept allowed Claim 219 and to rewrite any one or more of objected claims 205, 210-213, 215-218, 222, 224 and 225 so as to include all of the limitations of any base claim and any intervening claims, thereby putting such objected claims in allowable form. Applicant also reserves his right to file additional divisional applications to continue the prosecution of all withdrawn claims.

Respectfully submitted,

Date: 20FEB07

Samuel Digirolamo
Reg. No. 29,915
Blackwell Sanders Peper Martin LLP
720 Olive Street, Suite 2400
St. Louis, MO 63101
314-345-6000
ATTORNEYS FOR APPLICANT

Appendix A – Claims Appendix

5. A method executed by a computer processor, for authorizing information exchange between at least one of a plurality of candidates and at least one of a plurality of employers prior to any direct contact between said candidate and said employer, said candidate having one or more candidate attributes including candidate minimum requirements, said employer having one or more employer attributes including employer minimum requirements, said one or more candidate attributes and minimum requirements including a searchable profile being stored in a candidate database, and said one or more employer attributes and minimum requirements including a searchable profile being stored in an employer database, said method comprising:

receiving a search request from either said candidate or said employer to search the searchable profile of one of the candidate and employer databases for a possible employment opportunity based upon certain search parameters;

processing the search request and providing the results to the requesting one of said candidate and said employer;

receiving ~~a~~ at least one request for release of contact information from the requesting one of said candidate and said employer based upon the search results;

determining that the attributes of the requesting one of said candidate and said employer satisfy the minimum requirements of a non-requesting candidate or employer stored in the candidate and employer databases;

receiving a response from said non-requesting candidate or employer consenting to the release of the contact information of said candidate or said employer to said requesting party;

obligating a payment due in real time based on the response to said request for release of contact information wherein said payment due is a fee to a career site operator; and

providing exchange of contact information in real time prior to any direct contact between said candidate and said employer.

6. The method as set forth in claim 5, wherein said information exchange is the release of contact information, prior to any direct contact between the parties.

10. The method as set forth in claim 5, wherein an amount of said obligation is chosen from a general equivalency diploma amount, a high school amount, a vocational educational training amount, an associate degree amount, a bachelor degree amount, a master degree amount, and a doctorate amount, wherein said doctorate amount is greater than or equal to said master degree amount, which is greater than or equal to said bachelor degree amount, which is greater than or equal to said associate degree amount, which is greater than or equal to said vocational educational training amount, which is greater than or equal to said high school amount, which is greater than or equal to said general equivalency diploma amount.

14. A distributed network for facilitating the exchange of contact information between at least one of a plurality of candidates and at least one of a plurality of employers, said candidate having one or more candidate attributes including candidate minimum requirements, and said employer having one or more employer attributes including employer minimum requirements, said distributed network comprising:

means for managing enterprise database resources;

means for storing the candidate attributes and requirements in a candidate database and providing at least a portion of the candidate database to be searched by said candidate and said employer;

means for storing the employer attributes and requirements in an employer database and providing at least a portion of the employer database to be searched by said candidate and said employer;

means for receiving a search request from either said candidate or said employer to search the searchable portion of one of the candidate and employer databases for a possible employment opportunity based upon certain search parameters;

means for processing the search request and providing the results thereof to the requesting one of said candidate and said employer;

means for receiving a request for release of contact information from the requesting one of said candidate ~~or~~ and said employer based upon the search results;

means for determining that the attributes of the requesting one of said candidate and said employer satisfy the minimum requirements of a non-requesting candidate or employer;

means for determining that there is mutual consent for release of contact information regarding the candidate;

means for computing a payment fee to the career site operator in real time based on the mutual consent for the release of contact information;

Monster Worldwide, Inc. Exhibit 1010 (p.183/1328)

means for obligating the payment fee in real time to the career site operator;

means for collecting said payment fee in real time; and

means for providing the exchange of contact information in real time prior to any direct contact between said candidate and said employer.

17. The distributed network as recited in claim 14 wherein said means for determining that there is mutual consent further comprises means for receiving a response to said request for release of contact information from the non requesting one of said candidate and said employer.

200. The method of claim 5 wherein said employer agrees in advance, to real time billing and/or payment of a fee to a career site operator upon said candidate's consent to the release of candidate's contact information.

204. The method as set forth in claim 5 wherein the amount of said obligation is computed in real time.

205. The method as set forth in claim 5 wherein before processing the search request:

determining whether the requesting one of said candidate and said employer was previously requested to provide a response to a request for release of contact information; and

if it is determined that either said employer or said candidate was previously requested to provide a response to a request for release of contact information and no response was received, then such non-responding employer or candidate is precluded from further interaction with the system until said response is provided.

208. The method as set forth in Claim 5 wherein:

if the attributes of the requesting one of said candidate and said employer do not satisfy the minimum requirements of the non-requesting candidate or employer, then communicating to said requesting one of said candidate and said employer that at least one attribute of said requesting party does not satisfy the minimum requirements of the non-requesting party;

offering the opportunity to the requesting one of said candidate and said employer to change its at least one non-satisfying attribute to satisfy the minimum requirements of the non-requesting party; and

if the requesting one of said candidate and said employer changes its at least one non-satisfying attribute to satisfy the minimum requirements of the non-requesting party, then receiving a response from said non-requesting candidate or employer consenting to the release of the contact information of said candidate to said employer.

209. A method for operating a computer system for authorizing information exchange between at least one of a plurality of candidates and at least one of a plurality of employers prior to any direct contact between said candidate and said employer, said candidate having one or more attributes, including candidate minimum requirements, and said employer having one or more attributes, including employer minimum requirements, said method comprising:

storing the candidate attributes and requirements in a candidate database;

storing the employer attributes and requirements in an employer database;

establishing a portion of the employer database to be searchable by said candidate;

receiving a search request from said candidate to search the searchable portion of the employer database for a possible employment opportunity based upon certain search parameters;

processing the search request and providing the results to the requesting candidate;

receiving a request from said candidate to submit said candidate's contact information to at least one employer based upon the search results;

determining that the attributes of the candidate satisfy the minimum requirements of the at least one employer;

receiving a response from said at least one employer that it desires to receive the contact information of said candidate;

for each specific response, obligating a payment due in real time based on said employer's consent to receive the contact information of said candidate wherein said payment due is a fee to a career site operator; and

providing the exchange of contact information in real time between said candidate and said at least one employer.

214. A method for operating a computer system for authorizing information exchange between at least one of a plurality of candidates and at least one of a plurality of employers prior to any direct contact between said candidate and said employer, said candidate having one or more attributes, including candidate minimum requirements, and said employer having one or more attributes, including employer minimum requirements, said method comprising:

storing the candidate attributes and requirements in a candidate database;

storing the employer attributes and requirements in an employer database;

establishing a portion of the candidate database to be searchable by said employer;

receiving a search request from said employer to search the searchable portion of the candidate database for a possible employment opportunity based upon certain search parameters;

processing the search request and providing the results to the requesting employer;

receiving a request from said employer for release of contact information of at least one candidate based upon the search results;

determining that the attributes of the employer satisfy the minimum requirements of the at least one candidate;

receiving a response from said at least one candidate that it desires to release the contact information of said candidate to said employer;

for each specific response, obligating a payment due from said employer in real time based on said at least one candidate's consent for release of contact information wherein said payment due is a fee to a career site operator; and

providing the exchange of contact information in real time between said at least one candidate and said employer.

221. A computer system for coordinating information exchange between at lease one of a plurality of candidates and at least one of a plurality of employers prior to any direct contact between said candidate and said employer, said candidate having one or more candidate attributes, including candidate minimum requirements, said employer having one or more

employer attributes, including employer minimum requirements, said computer system comprising:

a processor;

memory connected to said processor;

at least one program for controlling the operation of said processor; and

an interface operable to communicate with said candidate and said employer;

said processor being operative with said memory and with said at least one program to:

store the candidate attributes and requirements in a candidate database;

store the employer attributes and requirements in an employer database;

establish a searchable portion of the candidate database;

establish a searchable portion of the employer database;

receive a search request from either said candidate or said employer to search the searchable portion of one of the candidate and employer databases for a possible employment opportunity;

process the search request and provide the results thereof to the requesting one of said candidate and said employer;

receive a request for release of contact information from the requesting one of said candidate and said employer based upon the search results;

determine that the attributes of the requesting one of said candidate and said employer satisfy the minimum requirements of the non-requesting candidate or employer stored in the candidate and employer databases;

obligate a payment due from said employer in real time based on the mutual consent for release of contact information wherein said payment fee is due to a career site operator; and

provide the exchange of contact information in real time prior to any direct contact between said candidate and said employer.

223. The computer system as set forth in Claim 221 wherein said system further includes a payment interface operable to receive payment in real time from said employer, said processor being further operable to receive payment in real time from said employer through said payment interface based upon the occurrence of said mutual consent.

Appendix B – Evidence Appendix

U.S. Patent 5,884,270 issued to Walker

WO Published Application WO 01/82185 A2 to Pineda

U.S. Published Application 2001/0042038 to Phatak

Monster Worldwide, Inc. Exhibit 1010 (p.190/1328)

US005884270A

United States Patent [19]

Walker et al.

[11] Patent Number: 5,884,270

[45] Date of Patent: Mar. 16, 1999

[54] **METHOD AND SYSTEM FOR FACILITATING AN EMPLOYMENT SEARCH INCORPORATING USER-CONTROLLED ANONYMOUS COMMUNICATIONS**

[75] Inventors: **Jay S. Walker**, Ridgefield, Conn.; **Bruce Schneier**, Minneapolis, Minn.; **T. Scott Case**, Darien, Conn.

[73] Assignee: **Walker Asset Management Limited Partnership**, Stamford, Conn.

[21] Appl. No.: **704,314**

[22] Filed: **Sep. 6, 1996**

[51] **Int. Cl.**[6] **G06F 17/30**

[52] **U.S. Cl.** **705/1**; 705/26; 379/93.12; 395/200.57; 364/222.2; 364/284

[58] **Field of Search** 705/37, 1, 26; 455/2; 380/20, 30, 25; 379/93.12; 395/200.57; 364/222.2, 284

[56] **References Cited**

U.S. PATENT DOCUMENTS

4,218,738	8/1980	Matyas et al.	380/25
4,847,890	7/1989	Solomon et al.	379/67
4,870,591	9/1989	Cicciarelli et al.	364/468.14
4,914,698	4/1990	Chaum	380/30
4,961,224	10/1990	Yung	380/25
4,962,449	10/1990	Schlesinger	395/186
4,962,532	10/1990	Kasiraj et al.	380/25

(List continued on next page.)

FOREIGN PATENT DOCUMENTS

6-19943	1/1994	Japan .
6-224938	8/1994	Japan .

OTHER PUBLICATIONS

A. Michael Froomkin, "Flood Control On The Information Ocean: Living With Anonymity, Digital Cash, and Distributed Databases," Conference for the Second Century of the Univ. of Pittsburgh School of Law: The Adequacy of Current Legal Paradigms to Meet Future Challenges (Sep. 21, 1995).

Aaron Weiss, "Grad Seeks Job", *Internet World*, pp. 76–79 (Sep. 1996).

Jeff Ubois, "Anonymity Has Its Place; Questions Concerning On-Line Anonymity Arise," *Information Access Company*, vol. 8, No. 8, p. 28(Apr. 28, 1995).

Debora Sparr et al., "The Net", *Harvard Business Review*, p. 125(May/Jun. 1996).

Gary H. Anthes, "Stealth E-mail Poses Corporate Security Rsik", *Computerworld*, p. 1 (Feb. 12, 1996).

Michelle Quinn, "Web Site For Fake E-Mail Backfires On Operator", *The San Diego Union-Tribune*, Ed. 1–8, p. 7 (Jun. 20, 1995).

Jim Milloway, "Corporate Employment Bulletin Board ", *WebStaff, Inc.*, 1996.

Peter Lewis, "Cloaks and Daggers", *Vantage Point*, p. 133 (Jul. 1996).

Lisa Sanders, "Smile, You're On Job-Candidate Camera", *Business Week*, p. 6 (Aug. 5, 1996).

"Restrac Expands Internet Recruiting . . . ", *Business Wire* (Jul. 10, 1996).

"Romancing The Internet", *Business Wire* (Jul. 12, 1995).

Quay Partners Int'l., Ltd., "Net Gain For Recruiting", *U.S. Banker* (Jul. 1996).

Primary Examiner—Parshotam S. Lall
Assistant Examiner—David M. Ovedovitz
Attorney, Agent, or Firm—Jeffrey L. Brandt

[57] **ABSTRACT**

A system for facilitating employment searches using anonymous communications includes a plurality of party terminals, a plurality of requestor terminals, and a central controller. The system receives and stores employment data about prospective employment candidates. Upon receiving criteria for candidates of interest from an employer and authorization from the candidates, the central controller releases to the employer the employment data associated with the candidates. The system also establishes communications channels between the employer and the candidates, while maintaining their anonymity.

33 Claims, 12 Drawing Sheets

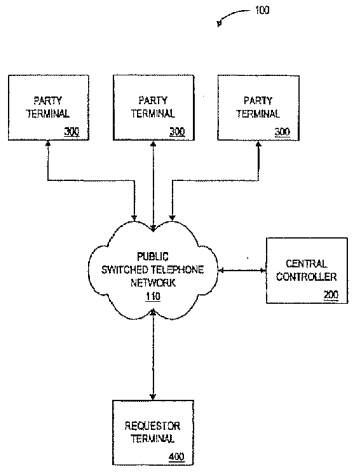

U.S. PATENT DOCUMENTS

5,018,096	5/1991	Aoyama	711/164
5,058,152	10/1991	Solomon et al.	379/67.1
5,077,665	12/1991	Silverman et al.	705/37
5,107,443	4/1992	Smith et al.	345/331
5,164,897	11/1992	Clark et al.	705/1
5,267,148	11/1993	Kosaka et al.	705/37
5,283,731	2/1994	Lalonde et al.	705/1
5,361,295	11/1994	Solomon et al.	379/67.1
5,392,353	2/1995	Morales	380/20
5,400,393	3/1995	Knuth et al.	379/88.27
5,416,694	5/1995	Parrish et al.	705/8
5,459,859	10/1995	Senda	707/10
5,485,510	1/1996	Colbert	379/145
5,495,412	2/1996	Thiessen	705/1
5,500,513	3/1996	Langhans et al.	235/380
5,509,064	4/1996	Welner et al.	370/265
5,553,145	9/1996	Micali	380/30
5,608,446	3/1997	Carr et al.	348/6
5,664,115	9/1997	Fraser	705/37
5,689,799	11/1997	Dougherty et al.	455/2

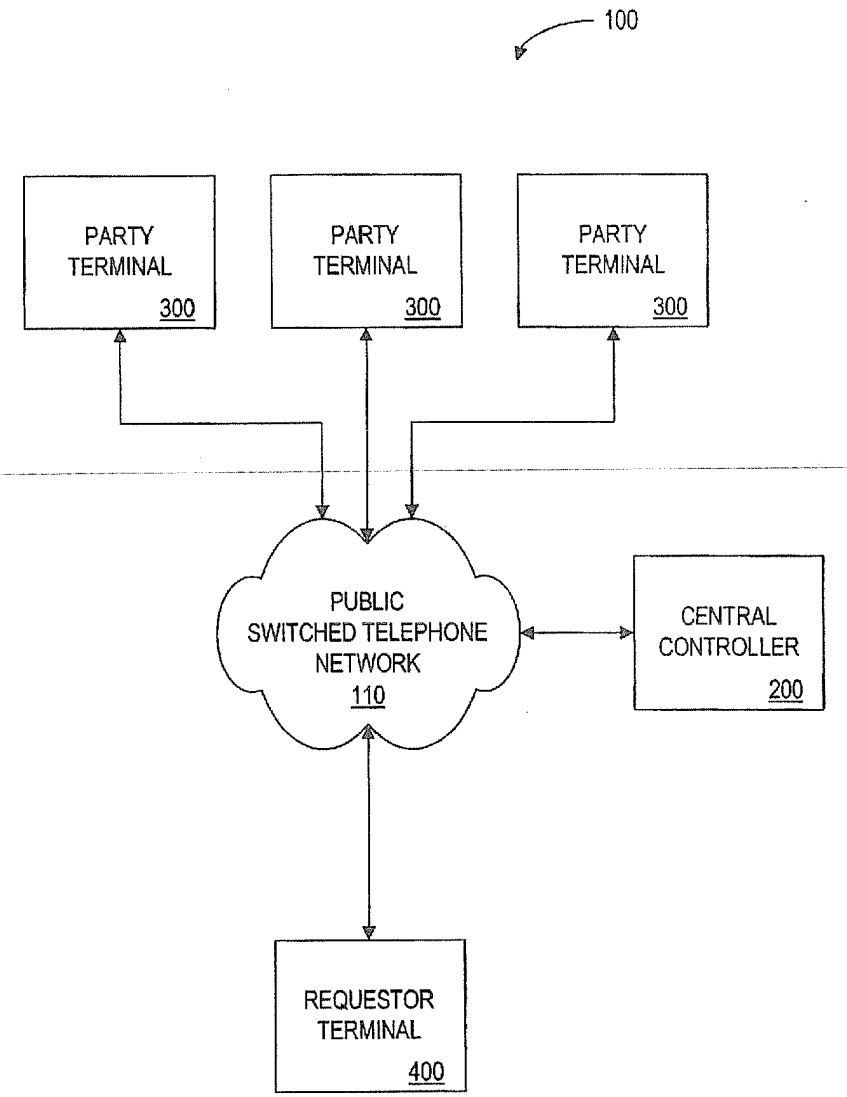
100
PARTY TERMINAL 300
PARTY TERMINAL 300
PARTY TERMINAL 300
PUBLIC SWITCHED TELEPHONE NETWORK 110
CENTRAL CONTROLLER 200
REQUESTOR TERMINAL 400

FIG. 1

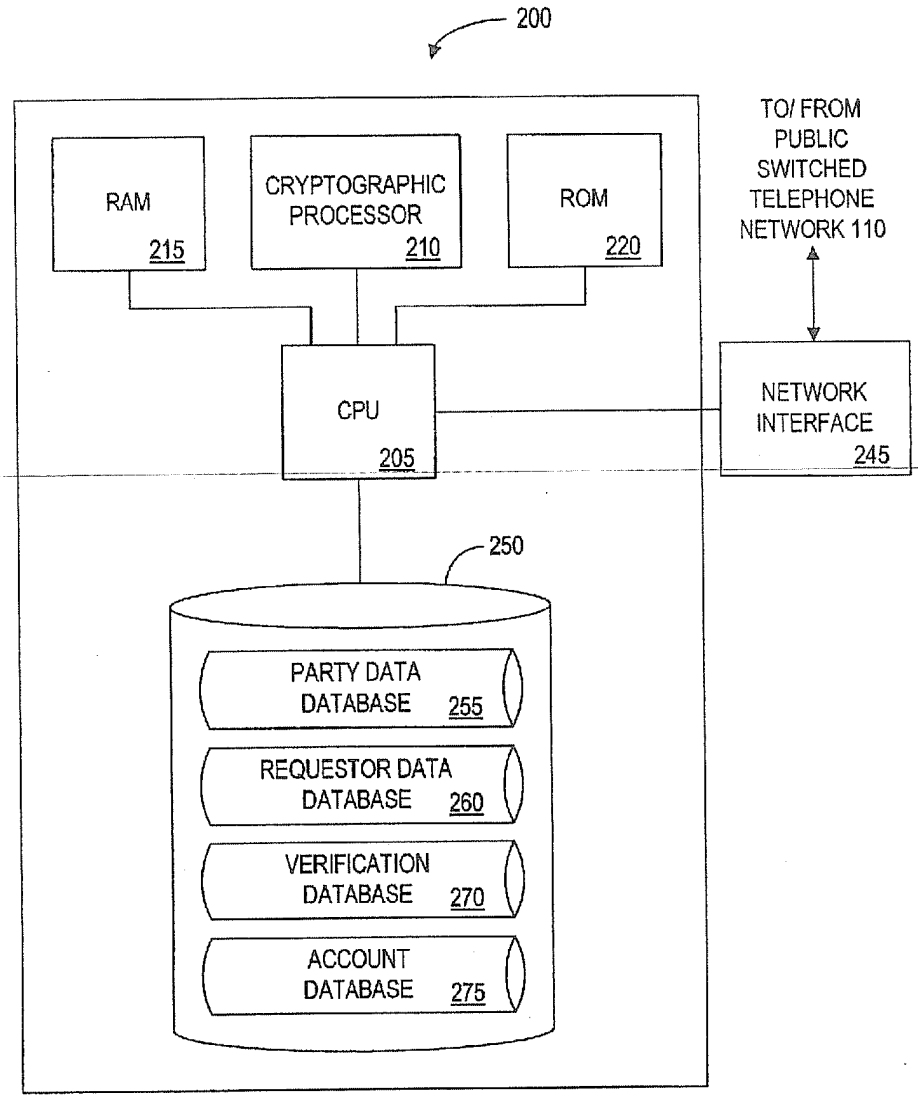
200
RAM
215
CRYPTOGRAPHIC PROCESSOR
210
ROM
220
TO/ FROM PUBLIC SWITCHED TELEPHONE NETWORK 110
CPU
205
NETWORK INTERFACE
245
250
PARTY DATA DATABASE
255
REQUESTOR DATA DATABASE
260
VERIFICATION DATABASE
270
ACCOUNT DATABASE
275

FIG. 2A

PARTY DATA DATABASE 255
(PDDB)

FIELD NAME	FIELD CHARACTERISTIC
PARTY ID	UNIQUE ALPHANUMERIC
NAME	TEXT
PSEUDONYM LIST	TEXT LIST OF PSEUDONYMS USED TO RELATE TO THIS PARTY
ADDRESS	TEXT
PHONE	TEXT
E-MAIL	TEXT
EMPLOYMENT HISTORY	TEXT/VIDEO/AUDIO
EDUCATION HISTORY	TEXT/VIDEO/AUDIO
OUTSIDE INTERESTS	TEXT/VIDEO/AUDIO
AUTHORIZATION PROFILE	PROFILE OF COMPANIES THE CANDIDATE WILL AND WILL NOT RELEASE INFORMATION TO. ALSO INCLUDES INFORMATION AS TO WHAT INFORMATION WILL BE RELEASED TO EACH COMPANY

REQUESTOR DATA DATABASE 260
(RDDB)

FIELD NAME	FIELD CHARACTERISTIC
REQUESTOR ID	UNIQUE ALPHANUMERIC
NAME	TEXT
PSEUDONYM LIST	TEXT LIST OF PSEUDONYMS USED TO RELATE TO THIS REQUESTOR
ADDRESS	TEXT
PHONE	TEXT
E-MAIL	TEXT
COMPANY HISTORY	TEXT/VIDEO/AUDIO
FINANCIAL PROFILE	TEXT/VIDEO/AUDIO
JOB DESCRIPTIONS	TEXT/VIDEO/AUDIO
AUTHORIZATION PROFILE	PROFILE OF CANDIDATES THE COMPANY WILL AND WILL NOT RELEASE INFORMATION TO. ALSO INCLUDES INFORMATION AS TO WHAT INFORMATION WILL BE RELEASED TO WHICH CANDIDATE

FIG. 2B

VERIFICATION DATABASE 270
(VDB)

FIELD NAME	FIELD CHARACTERISTIC
VERIFIER ID	UNIQUE ALPHANUMERIC
PARTY OR REQUESTOR ID	UNIQUE ALPHANUMERIC
NAME	TEXT
CONTACT INFORMATION	TEXT INCLUDING PHONE, E-MAIL, ONLINE INFORMATION, ETC.
VERIFIED INFORMATION	LIST OF INFORMATION PROVIDED BY ASSOCIATED PARTY OR REQUESTOR THAT HAS BEEN VERIFIED. MAKES VERIFICATION FASTER AFTER INITIAL REQUEST

ACCOUNT DATABASE 275
(SIDB)

FIELD NAME	FIELD CHARACTERISTIC
PARTY OR REQUESTOR ID	UNIQUE ALPHANUMERIC
PAYMENT/BILLING METHOD	TEXT
CURRENT BALANCE	NUMERIC
ACCOUNT STATUS	TEXT

FIG. 2C

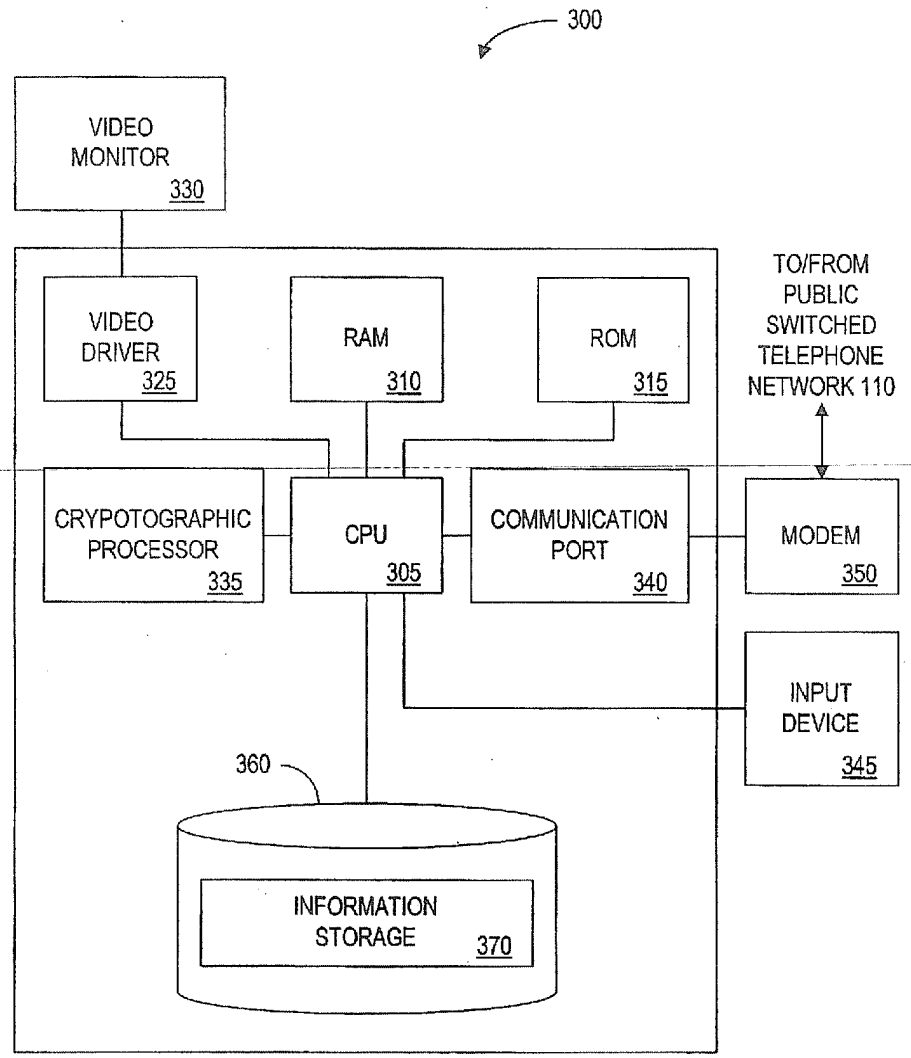
300
VIDEO MONITOR 330
VIDEO DRIVER 325
RAM 310
ROM 315
TO/FROM PUBLIC SWITCHED TELEPHONE NETWORK 110
CRYPTOGRAPHIC PROCESSOR 335
CPU 305
COMMUNICATION PORT 340
MODEM 350
INPUT DEVICE 345
360
INFORMATION STORAGE 370

FIG. 3

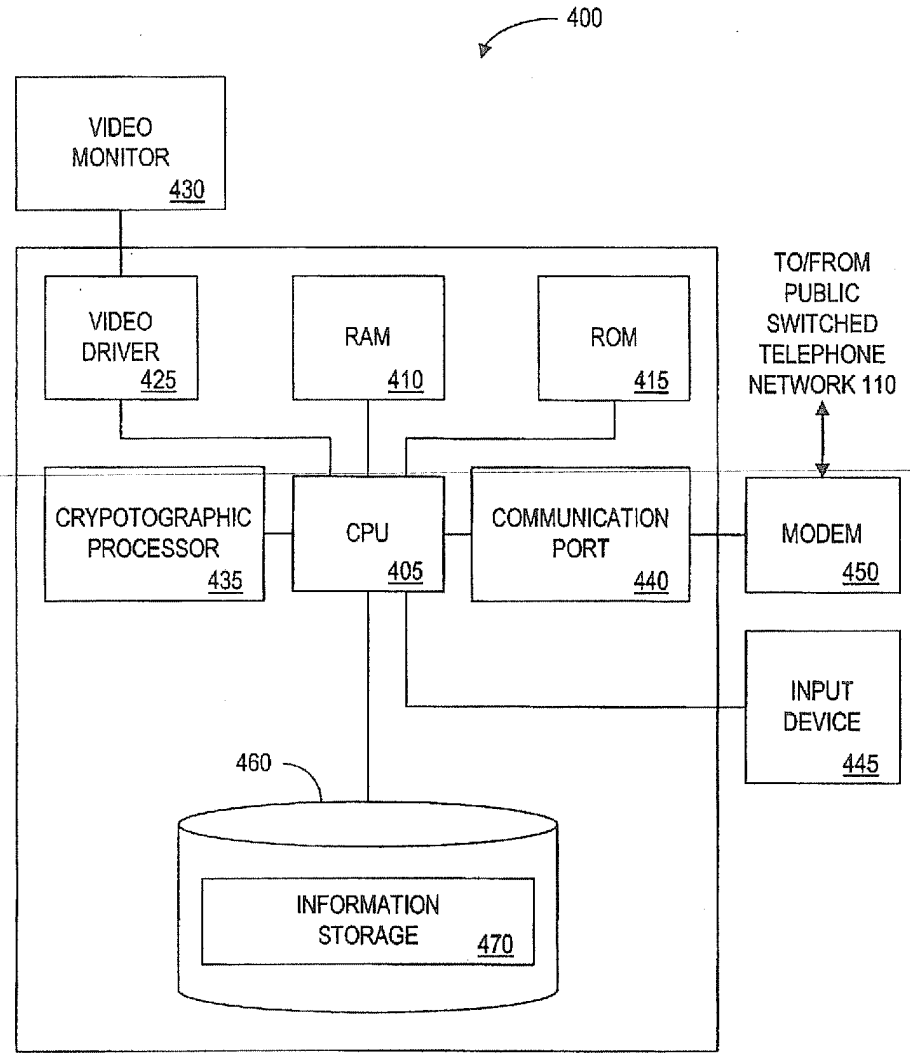
400
VIDEO MONITOR 430
VIDEO DRIVER 425
RAM 410
ROM 415
TO/FROM PUBLIC SWITCHED TELEPHONE NETWORK 110
CRYPTOGRAPHIC PROCESSOR 435
CPU 405
COMMUNICATION PORT 440
MODEM 450
INPUT DEVICE 445
460
INFORMATION STORAGE 470

FIG. 4

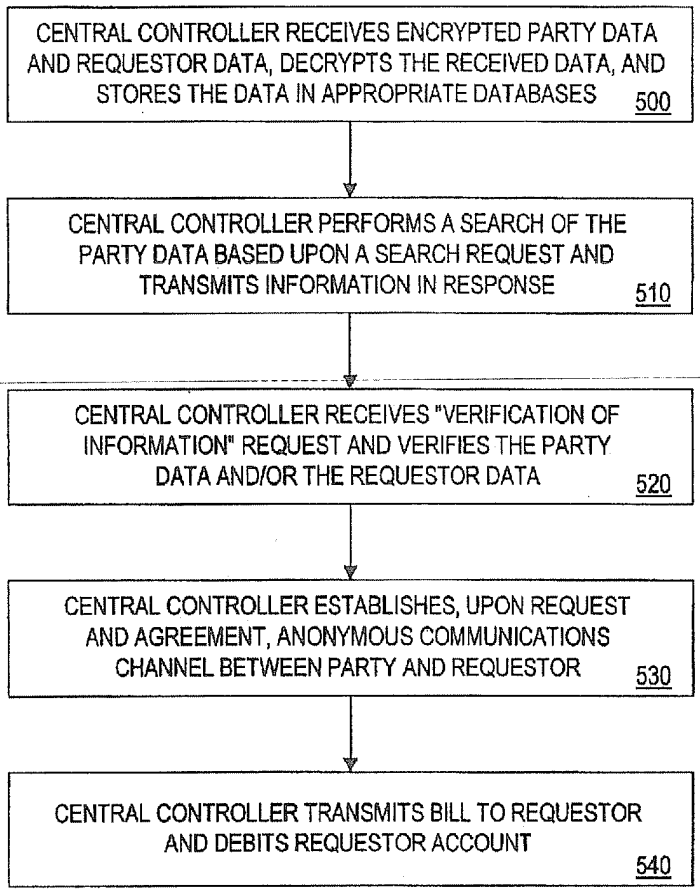
CENTRAL CONTROLLER RECEIVES ENCRYPTED PARTY DATA AND REQUESTOR DATA, DECRYPTS THE RECEIVED DATA, AND STORES THE DATA IN APPROPRIATE DATABASES
500
CENTRAL CONTROLLER PERFORMS A SEARCH OF THE PARTY DATA BASED UPON A SEARCH REQUEST AND TRANSMITS INFORMATION IN RESPONSE
510
CENTRAL CONTROLLER RECEIVES "VERIFICATION OF INFORMATION" REQUEST AND VERIFIES THE PARTY DATA AND/OR THE REQUESTOR DATA
520
CENTRAL CONTROLLER ESTABLISHES, UPON REQUEST AND AGREEMENT, ANONYMOUS COMMUNICATIONS CHANNEL BETWEEN PARTY AND REQUESTOR
530
CENTRAL CONTROLLER TRANSMITS BILL TO REQUESTOR AND DEBITS REQUESTOR ACCOUNT
540

FIG. 5

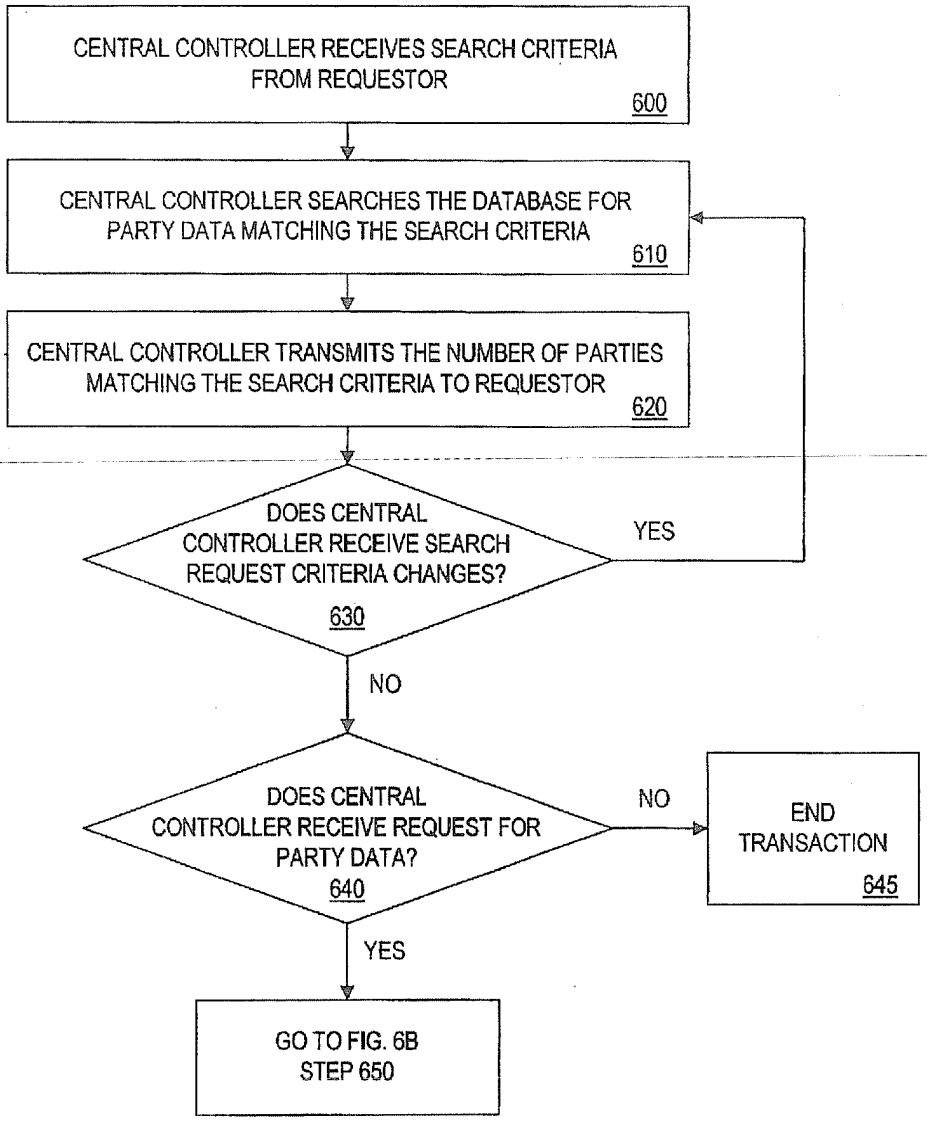
CENTRAL CONTROLLER RECEIVES SEARCH CRITERIA FROM REQUESTOR
600
CENTRAL CONTROLLER SEARCHES THE DATABASE FOR PARTY DATA MATCHING THE SEARCH CRITERIA
610
CENTRAL CONTROLLER TRANSMITS THE NUMBER OF PARTIES MATCHING THE SEARCH CRITERIA TO REQUESTOR
620
DOES CENTRAL CONTROLLER RECEIVE SEARCH REQUEST CRITERIA CHANGES?
630
YES
NO
DOES CENTRAL CONTROLLER RECEIVE REQUEST FOR PARTY DATA?
640
NO
END TRANSACTION
645
YES
GO TO FIG. 6B STEP 650

FIG. 6A

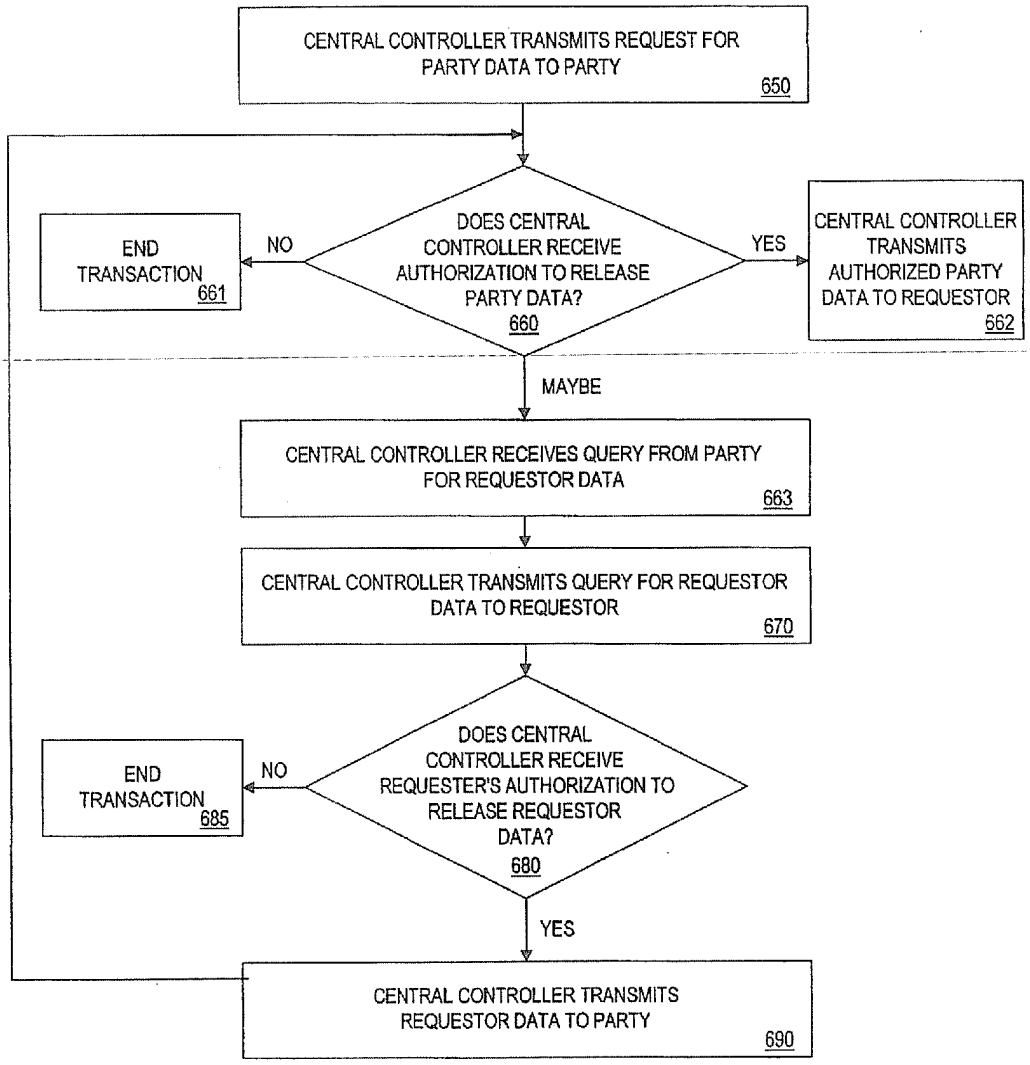
CENTRAL CONTROLLER TRANSMITS REQUEST FOR PARTY DATA TO PARTY
650
DOES CENTRAL CONTROLLER RECEIVE AUTHORIZATION TO RELEASE PARTY DATA?
660
NO
END TRANSACTION
661
YES
CENTRAL CONTROLLER TRANSMITS AUTHORIZED PARTY DATA TO REQUESTOR
662
MAYBE
CENTRAL CONTROLLER RECEIVES QUERY FROM PARTY FOR REQUESTOR DATA
663
CENTRAL CONTROLLER TRANSMITS QUERY FOR REQUESTOR DATA TO REQUESTOR
670
DOES CENTRAL CONTROLLER RECEIVE REQUESTER'S AUTHORIZATION TO RELEASE REQUESTOR DATA?
680
NO
END TRANSACTION
685
YES
CENTRAL CONTROLLER TRANSMITS REQUESTOR DATA TO PARTY
690

FIG. 6B

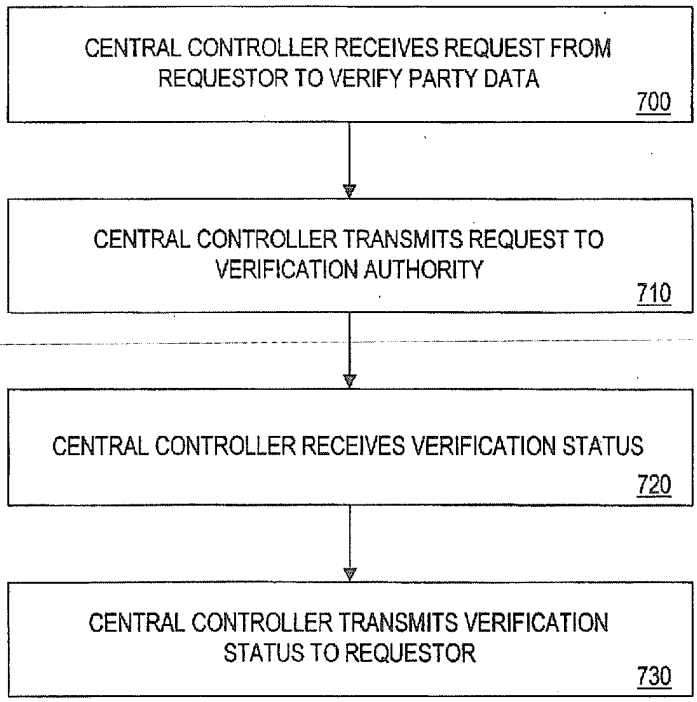
CENTRAL CONTROLLER RECEIVES REQUEST FROM REQUESTOR TO VERIFY PARTY DATA
700
CENTRAL CONTROLLER TRANSMITS REQUEST TO VERIFICATION AUTHORITY
710
CENTRAL CONTROLLER RECEIVES VERIFICATION STATUS
720
CENTRAL CONTROLLER TRANSMITS VERIFICATION STATUS TO REQUESTOR
730

FIG. 7

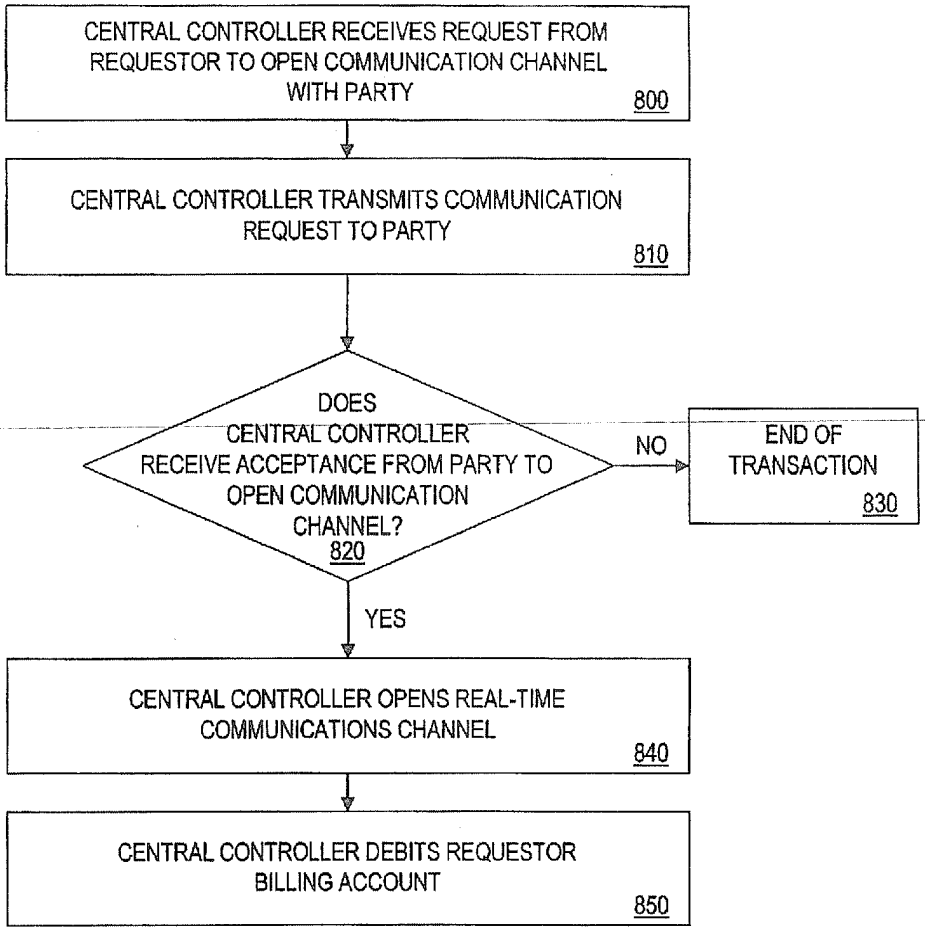
CENTRAL CONTROLLER RECEIVES REQUEST FROM REQUESTOR TO OPEN COMMUNICATION CHANNEL WITH PARTY
800
CENTRAL CONTROLLER TRANSMITS COMMUNICATION REQUEST TO PARTY
810
DOES CENTRAL CONTROLLER RECEIVE ACCEPTANCE FROM PARTY TO OPEN COMMUNICATION CHANNEL?
820
NO
END OF TRANSACTION
830
YES
CENTRAL CONTROLLER OPENS REAL-TIME COMMUNICATIONS CHANNEL
840
CENTRAL CONTROLLER DEBITS REQUESTOR BILLING ACCOUNT
850

FIG. 8

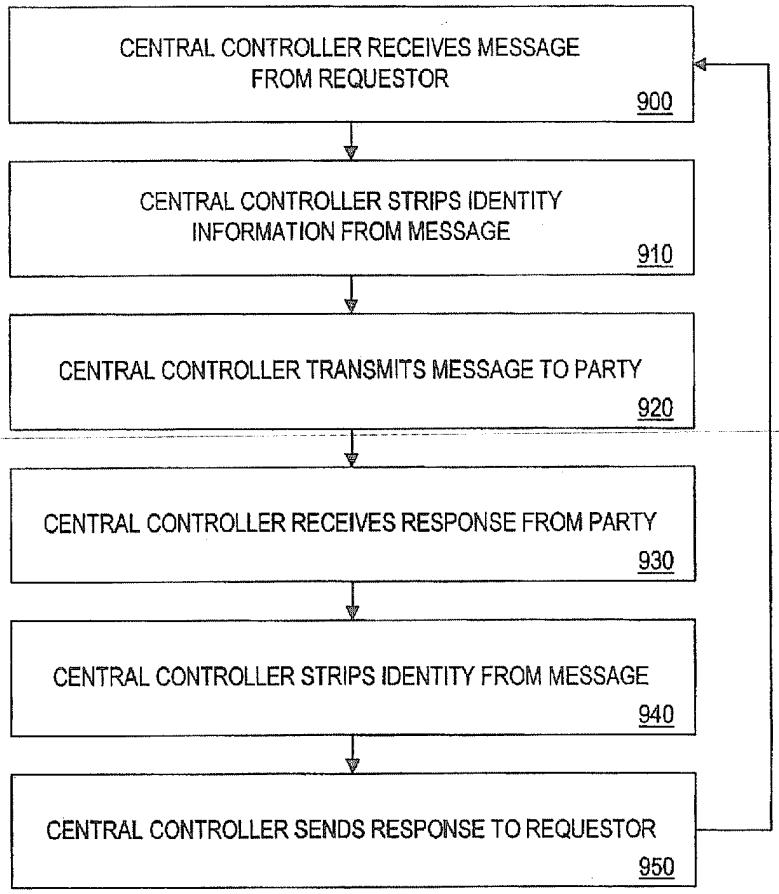
CENTRAL CONTROLLER RECEIVES MESSAGE FROM REQUESTOR
900
CENTRAL CONTROLLER STRIPS IDENTITY INFORMATION FROM MESSAGE
910
CENTRAL CONTROLLER TRANSMITS MESSAGE TO PARTY
920
CENTRAL CONTROLLER RECEIVES RESPONSE FROM PARTY
930
CENTRAL CONTROLLER STRIPS IDENTITY FROM MESSAGE
940
CENTRAL CONTROLLER SENDS RESPONSE TO REQUESTOR
950

FIG. 9

METHOD AND SYSTEM FOR FACILITATING AN EMPLOYMENT SEARCH INCORPORATING USER-CONTROLLED ANONYMOUS COMMUNICATIONS

BACKGROUND OF THE INVENTION

Field of the Invention

The present invention relates to establishing anonymous communications between two or more parties. More specifically, the invention relates to controlling the release of confidential or sensitive information of at least one of the parties in establishing anonymous communications.

CROSS-REFERENCE TO RELATED APPLICATIONS

This application is related to U.S. patent application Ser. No. 08/711,437 entitled "METHOD AND SYSTEM FOR FACILITATING WHISTLE-BLOWING INCORPORATING USER-CONTROLLED ANONYMOUS COMMUNICATIONS", now abandoned; application Ser. No. 08/708,969 entitled "METHOD AND SYSTEM FOR MATCHMAKING INCORPORATING USER-CONTROLLED ANONYMOUS COMMUNICATIONS"; application Ser. No. 08/708,968 entitled "METHOD AND SYSTEM FOR ESTABLISHING AND MAINTAINING USER-CONTROLLED ANONYMOUS COMMUNICATIONS"; and application Ser. No. 08/711,436 entitled "METHOD AND SYSTEM FOR FACILITATING NEGOTIATIONS INCORPORATING USER-CONTROLLED ANONYMOUS COMMUNICATIONS", now abandoned, each of which filed on Sep. 6, 1996 and assigned to the assignee of the present invention.

Description of the Related Art

The need for anonymous communications can be found in everyday situations. Police hotlines solicit tips from the public to help solve a crime, often without requiring callers to give their names. Cash rewards are often offered for the return of missing items with no questions asked.

One form of anonymity involves "shielded identity," where a trusted agent knows the identity of a masked party, but does not reveal that identity to others except under very special circumstances. Unless otherwise specified, the term "anonymity" is used throughout this application interchangeably with the notion of shielded identity.

Shielded identity appears in a wide range of useful and commercial functions. A company might run an employment advertisement in a newspaper with a blind P.O. box known only to the publisher. A grand jury could hear testimony from a witness whose identity is known only to the prosecutor and the judge, but is concealed from the jurors, the accused, and opposing counsel. A person could identify a criminal suspect from a lineup of people who cannot see him. A recruiter could contact potential candidates for a job opening without revealing the client's name. Witness protection programs are designed to shield the true identity of witnesses enrolled in the programs. A sexual harassment hotline could be set up for victims of sexual harassment to call in with their complaints, while promising to protect the callers' identities.

The above examples illustrate the need for anonymity or shielded identity due to a fear of exposure. The nee for anonymity can also be motivated by a desire for privacy. For instance, donors may wish to make an anonymous charitable contribution, an adoption agency typically shields the is entity of a child's birth mother, a Catholic confessional offers anonymous unburdening of the soul, and local phone companies maintain millions of unlisted telephone numbers accessible only by special operators.

The concepts of anonymity and shielded identity do not lend themselves to conventional communication systems. While it is possible to send and receive anonymous messages, such as a postcard with no return address or a call placed from a pay phone, it is difficult for parties e gaged in multiple communication episodes to remain anonymous from one another. In general conventional communication systems are premised upon the notion that communicating parties know each other's identity. For the purposes of this invention, the term "communications system" refers to any system that facilitates an ongoing cycle of messages and responses.

Most current communications systems, whether written or oral, do not permit an ongoing, multi-party, shielded identity dialogue. For example, letters need an address to be delivered, calling someone on the phone requires a phone number, and meeting face-to-face provides for visual identification. The process involved in most ongoing communication systems is simply not conducive to retaining concealed identities.

Yet, in some cases, concealing identity can actually encourage or facilitate communication between unwilling or cautious parties. For example, a party negotiating a peace treaty with another may be unwilling to reveal his identity because, if the negotiations fail, that party might be exposed or subjected to potential blackmail.

One specific example of the need for concealing identities is in the employment search process, where the release of the name of the hiring company (or the position involved) could be damaging to the company. The hiring company might be concerned about how potential competitors would use the knowledge that the company is searching for employees to upset customers who are relying on the stability of the company. Mere speculation that a company is searching for a new president could dramatically reduce the price of the company's stock. To find potential candidates for the vacant position, the company could engage an employment search firm to discretely find potential candidates without disclosing to the market, or even potential candidates, the company's identity until the company decides to confide in or hire a particular candidate.

In engaging such employment search firms, however, a hiring company entails some risk that the search firm will prematurely or indiscriminately reveal the company's identity to a potential candidate. Search firms are generally compensated based upon the number of successful placements, and thus are motivated to make vacant positions appear as attractive as possible to potential candidates. In doing so, search firms could be tempted to reveal enough information about the company for potential candidates to discover the identity of the company, or, for that matter, the firms may reveal the company's identity itself. Accordingly, hiring companies cannot be counted upon to maintain effective control of what information is released to potential candidates, and thus are unable to instill any satisfactory degree of confidence in their clients about the confidential status of their search for job replacements.

The use of search firms also creates inefficiencies. In dealing with a search firm, candidates looking for a new job may engage in a dialogue with the search firm, asking a series of detailed questions about the particular job, com-

Monster Worldwide, Inc. Exhibit 1010 (p.205/1328)

pany expectations, various qualification criteria, benefits, options, perks, and other factors, all without the candidate knowing the name of the hiring company. In response, the search firm may reveal, from general to specific, information about the hiring company. For instance, in response to questions, the search firm may successively reveal that the hiring company is a Fortune 500 company, a transportation company, an airline, headquartered in the Midwest, and, finally, that it is United Airlines. In return, the candidate may also authorize the search firm to release information about itself For instance, the search firm may disclose that the candidate is employed at a small software company, that he is the head of a software development group of seven programmers, then that he is earning $75,000 plus a $20,000 bonus in his current job, then that he is located in the Stamford, Conn. area and then finally his identity.

From the outside, these actions may appear to be a type of "dance," where each party seeks to learn the necessary information to keep the process moving forward. To answer any difficult questions, the search firm, trusted by both parties, facilitates an assisted dialogue between the candidate and the company.

By creating this additional layer in the communication process, however, the amount of effort and expense incurred by the hiring party and the candidates increases. Further, using such a search firm creates delays in communicating information between the company and the candidates and increases the likelihood that misunderstandings may occur.

In addition, the success of a search firm to fill a position is limited by the number of candidates that the search firm contacts. Search firms may target only certain individuals while overlooking many other qualified candidates who, if contacted, would have been very interested in considering the available positions. As such, search firms often do not reach a large pool of potential candidates. Search firms also know that the candidates most qualified for jobs are those that are currently employed. Recruiters would love to be able to show these coveted employees even better opportunities. Unfortunately, search firms have no way of identifying and contacting these prime candidates. Present systems for recruiting typically rely on the candidate to present himself to the recruiter—at a substantial risk to the employee. No system currently gives an employee the incentive and protection he needs to feel comfortable submitting his resume.

Another area in which shield identity may be desirable is dating. For example, a person could serve as a match-maker by setting up two people with whom he is acquainted on a blind date. Before agreeing to go on the date, each acquaintance may ask the match-maker questions about the other person and instruct the match-maker not to reveal his/her identity without prior authorization. Once each of the acquaintances feels comfortable about the other person, he/she may authorize the match-maker to reveal his/her identity and agree to the date.

Again, however, the use of match-makers suffers from the same drawbacks as the search firms. There is little or no control over what information match-makers disclose. For instance, a match-maker may feel greater loyalty to one of the acquaintances and willingly divulge the identity of the other acquaintance. Also, using match-makers slows down the communication process and can result in miscommunication. Finally, the number of people that a match-maker can set up is limited by the number of people to whom the match-maker is acquainted.

Attempts have been made to automate the employment search process and matchmaking process. For instance, U.S. Pat. No. 5,164,897 discloses an automated method for selecting personnel matching certain job criteria. Databases storing employee qualifications are searched to identify which personnel have qualifications matching search criteria. Such a system, however, does not provide anonymous communications between the employer and the employee and does not provide control over the release of information stored within those systems to others. Thus, there is a need for a system that allows users to exercise control over the release of information to others and that provides efficient anonymous communication.

SUMMARY OF THE INVENTION

Accordingly, the present invention is directed to a communications method and system that obviates problems due to limitations and disadvantages of the prior art.

A goal of the invention is to provide a communication system incorporating a central database of information supplied by one or more of parties and managed by a central administrator, where all parties to the system can manage and control the release of any or all information about themselves or their identities, and where such a system allows for electronic-based communications between the parties without the necessity of revealing the identity of either party.

Another goal of the invention to allow parties to submit criteria for searching a trusted agent's confidential database and receive a count of the number of records that satisfy the criteria, without revealing the identities of the parties associated with those records.

A further goal of the invention is to allow a system administrator to send a request for authorization to release information about a party to a searching party.

Other goals of the invention are to provide a system that encrypts communications between parties to maintain the anonymity of the parties; to authenticate searchable information contained in a central database for release to parties; to allow one or both parties to receive compensation for contributing or maintaining information accessible in a database; and to allow one party to apply a customized scoring algorithm to information contained about other parties in a database.

Still other goals of this invention are to provide a system for a trusted agent to act as an anonymous remailer or communicate via e-mail or other electronic means with specific outside parties requested or identified by one of the parties to validate information about the parties.

Yet another goal of the invention is to be able to store and authenticate such information that may be provided by outside parties in a central database while allowing the outside parties to retain control over the release of respective information to other parties.

This invention meets these goals by allowing a party to maintain effective control over the timing and release of certain information stored in a database, including the party's identity and other relevant data about the party, to another party. This controlled release of identity can be performed gradually in a series of steps where the party authorizes release of more and more information. The invention also authenticates information stored in the database before releasing the information, thereby improving the reliability of the released information. Finally, the invention establishes a communications channel between a party and a requestor while not necessarily revealing the identity of the party and/or the requestor to each other. The controlled release of information in the invention allows for new

Monster Worldwide, Inc. Exhibit 1010 (p.206/1328)

improvements in the quality of the communication process when one party to the process would suffer significant costs or be exposed to significant risks if their identity were released prematurely or indiscriminately.

According to the present invention, a method and system is disclosed for operating a computer system to facilitate an exchange of identities between two anonymous parties. The method and system are operative to receive from a first party first data including an identity of the first party and to receive from the first party at least two first-party rules for releasing the first data including a rule for releasing the identity of said first party. The system and method are further operative to receive from a second party a search request comprising at least one search criterion; receive from the second party second data including an identity of the second party; and receive from the second party at least two second-party rules for releasing the second party data including a rule for releasing the identity of the second party.

The system and method are further operative to process said search request to determine if the first data satisfies the search criterion and if so, then exchanging the first and second data, except the identities of the first and second parties, between the first and second parties in accordance with the first-party and second-party rules. The system and method are further operative to transmit the identity of the first party to the second party after the exchanging step, upon satisfying the first-party rule for releasing the identity of the first party, and after the exchanging step, upon satisfying the second-party rule for releasing the identity of the second party, transmitting the identity of the second party to the first party.

BRIEF DESCRIPTION OF THE DRAWINGS

The accompanying drawings provide a further understanding of the invention and are incorporated in and constitute a part of this specification. The drawings illustrate preferred embodiments of the invention, and, together with the description, serve to explain the principles of the invention.

In the drawings:

FIG. **1** illustrates one embodiment of the present invention;

FIG. **2A** illustrates a block diagram of the central controller of the system in accordance with the embodiment in FIG. **1**;

FIG. **2B** illustrates the contents of a party data database and a requestor data database in accordance with the embodiment in FIG. **1**;

FIG. **2C** illustrates the contents of a verification database and an account database in accordance with the embodiment in FIG. **1**;

FIG. **3** illustrates a block diagram of a party terminal in accordance with the embodiment in FIG. **1**;

FIG. **4** illustrates a block diagram of a requestor terminal in accordance with the embodiment in FIG. **1**;

FIG. **5** illustrates a flow diagram of a preferred method for establishing anonymous communications in accordance with this invention;

FIGS. **6A–6B** illustrate a flow diagram of a preferred method for searching for and releasing party data in accordance with this invention;

FIG. **7** illustrates a flow diagram of a preferred method for verifying the authenticity and accuracy of party data in accordance with this invention;

FIG. **8** illustrates a flow diagram of a preferred method for opening a communications channel between a party and a requestor in accordance with this invention; and

FIG. **9** illustrates a detailed flow diagram of a preferred method for transmitting party and requestor information in a communications channel in accordance with this invention.

DETAILED DESCRIPTION OF THE INVENTION

System Structure

FIG. **1** illustrates one embodiment of an anonymous communication system **100** according to this invention. System **100** identifies parties having characteristics of interest to a requestor, releases certain information about the identified parties to the requestor with authorization from the parties, releases certain information about the requestor to the identified parties with authorization from the requestor, and provides a communications channel between the identified parties and the requestor while maintaining their anonymity. For example, system **100** can be used to allow an employer (the requestor) to communicate with prospective candidates (the parties) whose background satisfies employment criteria provided by the employer without revealing the identity of the employer or the identities of the candidates. In a specific example, a software company may want to hire a programmer with 5+ years experience in writing C++, who is willing to live in Seattle, who will work 12–14 hour days 6 days a week, who will work for between $100,000 to $150,000 in salary plus bonuses, and who wants the opportunity to work for a startup with stock options in a publicly-traded company that could effectively double his salary. System **100** could identify a dozen candidates from resumes stored in a database, release information about these candidates only as authorized to the company, and deliver messages between the company and candidates without the company ever knowing the candidates identities. Although the invention can be used in connection with other applications, for the purpose of illustration, the employment search example is used throughout the specification.

System **100** includes a public switched phone network **110**, a central controller **200**, party terminals **300**, and requestor terminals **400**. Central controller **200**, party terminals **300**, and requestor terminal **400** preferably connect to network **110** through respective two-way communication links. Parties (e.g., candidates) access system **100** through respective party terminals **300**, and a requestor (e.g., an employer) accesses system **100** through requestor terminal **400**. The flow of data from terminals **300** and **400** is preferably limited and controlled by central controller **200**.

Under the control of central controller **200**, public switched telephone network **110** routes data to and from central controller **200**, party terminals **300**, and requestor terminal **400**. In a preferred embodiment, network **110** comprises a commercially-implemented network of computer-controlled telephone switches operated by, for example, a telephone company. Network **110** may also include communication networks other than a public switched telephone network, such as a wireless network, a paging network, or the Internet.

Central controller **200** controls the flow of data to and from party terminals **300** and requestor terminal **400**. Preferably, central controller **200** stores and authenticates the authorship of "party data" and "requestor data" received from party terminals **300** and requestor terminal **400**, respectively. "Party data" comprises data about or corresponding to a respective party. "Requestor data" comprises data about or corresponding to the requestor. In the employment search

Monster Worldwide, Inc. Exhibit 1010 (p.207/1328)

example, party data would include information that may be of interest to an employer about respective candidates, such as a candidate's identity, the candidate's address, the candidate's vital statistics, the candidate's work experience, the candidate's educational background, and the candidate's interests.

In one embodiment used with an employment system, each party fills out an electronic form that gets converted into an HTML format. This presents the party's employment history as a "hyper-resume." When released to a requestor, this resume allows the requestor to get more information about certain areas of a party's history. The hyper-links can point to additional text, QuickTime video, JPG photos or audio clips, allowing for a rich presentation of information about the party. Requestor data would include information about the employer, such as the employer's identity, the number of its employees, the locations of its offices, the industry in which the employer operates, the positions available and their job descriptions, fiscal information about the employer, and the history of the employer. The requestor data is collected and stored using similar techniques to those outlined above for an employee's employment history.

In addition, central controller **200** controls the release of requestor data and party data that the requestor and respective parties, respectively, have authorized for release. Central controller **200** also establishes a communications channel between party terminals **300** and requestor terminal **400**, while maintaining the anonymity of the parties using party terminals **300** and the requestor using requestor terminal **400**. The structure of controller **200** is described in greater detail below in connection with FIG. **2**A.

Party terminal **300** provides a party with an interface to system **100**. Preferably, party terminal **300** allows a party to enter party data and transmits it to central controller **200** via network **110**. Party terminal **300** also allows a party to indicate which of the entered party data system **100** is authorized to release to a requestor, view requestor data, and communicate anonymously with the requestor at requestor terminal **400**. The structure of party terminal **300** is described in greater detail in connection with FIG. **3**.

Requestor terminal **400** provides a requestor with an interface to system **100**. In a preferred embodiment, requestor terminal **400** allows a requestor to enter requestor data and transmits the requestor data to central controller **200** via network **110**. Requestor terminal **400** also allows a requestor to enter search criteria about parties of interest, to indicate which of the entered requestor data system **100** is authorized to release to a particular party, view party data, and communicate with parties at party terminals **300**. The structure of requestor terminal **400** is described in greater detail in connection with FIG. **4**.

FIG. **2**A illustrates a block diagram of central controller **200**. As shown in FIG. **2**A, central controller **200** includes CPU **205**, cryptographic processor **210**, RAM **215**, ROM **220**, network interface **245**, and data storage device **250**. Data storage device **250** includes a plurality of databases, including party data database **255**, requestor data database **260**, verification database **270**, and account database **275**, as well as program instructions (not shown) for CPU **205**. CPU **205** is connected to each of the elements of central controller **200**.

The databases in data storage device **250** are preferably implemented as standard relational databases capable of supporting searching and storing multimedia information such as text, video, QuickTime movies, photographs, and audio. FIG. 2B illustrates exemplary record layouts for party data database **255** and requestor data database **260**, and FIG. 2C illustrates record layouts for verification database **270** and account database **275**. Each record layout preferably comprises a two-dimensional array of information with one column for "Field Name" and another column for "Field Characteristic." The rows correspond to respective fields.

The "authorization profile" field contained in each of the party data and requestor data databases preferably comprises a list of rules for releasing party or requestor data. For example, the rules could simply include a list of companies to which party data is not to be released, or include characteristics of certain companies to which party data can be released, such as companies that are in the Fortune **500** and have stock option plans.

Verification database **270** preferably includes cross-referencing fields (not shown) to party data database **255** and requestor data database **260**. This allows indexing by verified information as well as other types of searches.

CPU **205** executes program instructions stored in RAM **215**, ROM **220**, and data storage device **250** to perform various functions described in connection with FIGS. **5**–**9**. In a preferred embodiment, CPU **205** is programmed to maintain data, including party data and requestor data, in storage device **250**. CPU **205** receives party data and requestor data from network **110** through network interface **245** and stores the received party data and requestor data in databases **255** and **260**, respectively. CPU **205** is also programmed to receive and store information in party database **255** and requestor database **260** indicating which of the party data and requestor data respective parties and requestors have authorized for release. Upon receipt of a request for authentication, CPU **205** transmits a verification request to a verification authority to authenticate the origin, authorship, and integrity of the party data and requestor data stored in databases **255** and **260**, respectively, and maintains a record of the verification request in database **270**.

CPU **205** is also preferably programmed to search databases **255** and **260** and transmit information in response to the search. CPU **205** receives a search request containing certain criteria and searches the databases of storage device **250** to find matches. Based upon the search, CPU **205** releases certain information to the requestor and the parties. Also, CPU **205** preferably assigns pseudonyms to each party and requestor, and stores the pseudonyms in databases **255** and **260**, respectively. The pseudonyms can include coded identifiers, web page addresses, bulletin board addresses, pager numbers, telephone numbers, e-mail addresses, voice mail addresses, facsimile telephone numbers, and postal mail addresses.

CPU **205** receives search criteria pertaining to parties of interest to the requestor and searches database **255** to identify parties whose party data satisfies the search criteria. There are a number of search techniques that can be used including keyword, fuzzy logic, and natural language search tools. For example, an employer could search for candidates with the following criteria: "two years of patent writing experience and lives in New England." CPU **205** compares the criteria against each party registered with the system using one or more search algorithms and transmits to the requestor the number of parties identified. If CPU **205** receives a request for party data corresponding to the identified parties, CPU **205** transmits to requestor terminal **400** the party data that the identified parties previously authorized for release along with respective pseudonyms. CPU **205** can also transmit queries to party terminals **300** inquiring whether respective parties authorize the release of

Monster Worldwide, Inc. Exhibit 1010 (p.208/1328)

additional party data. If CPU **205** receives a request for requestor data from a party, CPU **205** transmits to the appropriate party terminal **300** the request data that the requestor previously authorized for release, along with a pseudonym corresponding to the requestor.

CPU **205** is preferably also programmed to provide an anonymous communications channel between party terminals **300** and requestor terminal **400**. CPU **205** receives a request for an anonymous communications channel along with a pseudonym of a party and a requestor. In one embodiment, CPU **205** establishes either a real-time or non-real-time communications channel between the party and the requestor corresponding to the received pseudonyms. For example, CPU **205** could transmit control signals to configure network **110** to provide a direct telephone connection between the party and the requestor at their respective terminals **300** and **400**, thereby establishing a real-time communications channel. In another example, CPU **205** could receive and store electronic mail messages in electronic mailboxes assigned to the party and the requestor for their retrieval, thereby establishing a non-real-time communications channel.

CPU **205** preferably comprises a conventional high-speed processor capable of executing program instructions to perform the functions described herein. Although central controller **200** is described as being implemented with a single CPU **205**, in alternative embodiments, central controller **200** could be implemented with a plurality of processors operating in parallel or in series.

RAM **215** and ROM **220** preferably comprise standard commercially-available integrated circuit chips. Data storage device **250** preferably comprises static memory capable of storing large volumes of data, such as one or more floppy disks, hard disks, CDS, or magnetic tapes.

Network interface **245** connects CPU **205** to network **110**. Interface **245** receives data streams from CPU **205** and network **110** formatted according to respective communication protocols. Interface **245** reformats the data streams appropriately and relays the data streams to network **110** and CPU **205**, respectively. Interface **245** preferably accommodates several different communication protocols.

Cryptographic processor **210** is programmed to encrypt, decrypt, and authenticate the stored data in each of the databases described above. Cryptographic processor **210** encrypts and decrypts data received by and transmitted from CPU **205**. In a preferred embodiment, all party data and requestor data are encrypted before being transmitted onto network **110**. Also, processor **210** encrypts the data before CPU **205** transmits such data via network **110**. Any encrypted data received by CPU **205** is decrypted by processor **210**. The cryptographic protocols used by cryptographic processor **210** are described below in the section entitled "Cryptographic Protocols."

FIG. **3** illustrates a block diagram of party terminal **300**, according to one embodiment of the invention. Party terminal **300** includes CPU **305**, which is connected to RAM **310**, ROM **315**, video driver **325**, cryptographic processor **335**, communication port **340**, input device **345**, and data storage device **360**. Video monitor **330** is connected to video driver **325**, and modem **350** is connected to communication port **340** and public switched phone network **110**.

CPU **305** executes program instructions stored in RAM **310**, ROM **315**, and information storage **370** to carry out various functions associated with party terminal **300**. In a preferred embodiment, CPU **305** is programmed to receive data from input device **345**, receive data from communication port **340**, output queries and received data to video driver **325** for display on video monitor **330**, and output data to communication port **340** for transmission by modem **350**. CPU **305** preferably transmits the data to cryptographic processor **335** for encryption before outputting data to communication port **340** for transmission to network **110**. When CPU **305** receives encrypted data, CPU **305** transmits the encrypted data to cryptographic processor **335** for decryption.

CPU **305** preferably comprises a high-speed processor capable of performing the functions described herein. RAM **310** and ROM **315** comprise standard commercially-available integrated circuit chips. Information storage **370** comprises static memory capable of storing large volumes of data, such as one or more of floppy disks, hard disks, CDs, or magnetic tapes. Information storage **370** stores program instructions and received data.

Video driver **325** relays received video and text data from CPU **305** to video monitor **330** for display. Video monitor **330** is preferably a high resolution video monitor capable of displaying both text and graphics. Cryptographic processor **335** encrypts and decrypts data in accordance with conventional encryption/decryption techniques and is preferably capable of decrypting code encrypted by cryptographic processor **210**. Communication port **340** relays data between CPU **305** and modem **350** in accordance with conventional techniques. Modem **350** preferably comprises a high-speed data transmitter and receiver. Input device **345** comprises any data entry device for allowing a party to enter data, such as a keyboard, a mouse, a video camera, or a microphone. The operation of party terminal **300** is described in greater detail in connection with FIGS. **5–9**.

FIG. **4** illustrates a block diagram of requestor terminal **400** according to the invention. Terminal **400** in FIG. **4** includes CPU **405**, which is connected to RAM **410**, ROM **415**, video driver **425**, cryptographic processor **435**, communication port **440**, input device **445**, and data storage device **460**. Video monitor **430** is connected to video driver **425**, and modem **450** is connected to communication port **440** and public switched telephone network **110**. Terminals **300** and **400** are shown in FIGS. **3** and **4** to be structurally similar, though different reference numerals are used. As such, a more detailed description of terminal **400** can be obtained by referring to the above description of terminal **300**. In a preferred embodiment, however, terminals **300** are used by parties, whereas terminal **400** is used by a requestor.

Cryptographic Protocols

As described above, system **100** encrypts data before transferring such data between system users (including both parties and requestors) and central controller **200**, thereby providing various levels of security and privacy protection. As used throughout this section, the term "users" refers to both parties and requestors. A book entitled Applied Cryptography: Protocols, Algorithms, And Source Code In C by Bruce Schneier (2d Ed, John Wiley & Sons, Inc., 1996) describes in detail numerous cryptographic protocols that can be used.

These protocols can be understood from the following basic overview.

The following notation is used throughout the description of cryptographic protocols:

PKE_A: refers to the public encryption key of user A. This can be an RSA public key or a key for some other public key encryption scheme.

SKE_A: refers to the secret decryption key corresponding to encryption key PKE_A.

Monster Worldwide, Inc. Exhibit 1010 (p.209/1328)

PKS_A: refers to the public component of user A's signature key. This can be a DSS key or a key for some other public key signature scheme. It can also be the same key as PKE_A in public key systems like RSA.

SKS_A: refers to the private signature key corresponding to PKS_A. It can also be the same key as SKE_A in public key systems like RSA.

$E_{PKE}(M)$: refers to the encryption of the plain text message M with the public encryption key PKE.

$D_{SKE}(C)$: refers to the decryption of the cipher-text message C with the secret decryption key SKE.

$E_K(M)$: refers to the encryption of message M with a symmetric encryption algorithm and key K. It is apparent from the context whether the protocol uses public key or symmetric key encryption.

$D_K(C)$: refers to the decryption of the cipher-text message C with a symmetric encryption algorithm and key K.

$S_{SKS}(M)$: refers to signature of message M with secret signature key SKS.

H(M): refers to the hash of the message M with a cryptographic hash function like MD5 or SHA.

A,B: refers to the concatenation of A and B. This is commonly used when describing messages.

Public key encryption systems are usually several orders of magnitude slower than private (symmetric) key encryption systems. As a result, central controller **200** preferably uses the following protocol or the like to encrypt messages. Suppose that Alice wants to encrypt a message M so that only Bob can read it.

1. Alice obtains Bob's public encryption key, PKE_B, generates a random symmetric encryption key K, and encrypts it with Bob's public key.
2. Alice encrypts the message M with the key K using a symmetric encryption algorithm, like Triple-DES or IDEA, and sends
   $M_0=E_{PKE^B}(K),C$
   where $C=E_K(M)$.
3. Bob decrypts the key K using his private decryption key
   $K=D_{SKE^B}(E_{PKE^B}(K))$
   and uses the key to decrypt the message
   $M=D_K(C)=D_K(E_K(M))$

The bulk of the encryption is done using the symmetric encryption algorithm, which is orders of magnitude faster than the public key encryption algorithm. When a user encrypts a message to central controller **200** using central controller **200**'s public key, it is assumed that the user and central controller **200** carry out the above protocol.

Typical signature schemes (e.g. RSA or DSS) use a key pair for creating signatures and verifying them. One part of the pair, the private part, is used for generating signatures. The transformation for generating a signature is defined in such a way that only someone who knows the private part of the key pair can generate a signature. Hence, only the owner of the key pair can generate signatures.

The other part of the pair, the public part, is used to verify signatures. Anyone, including the owner of the key pair, can use the public component to verify that a signature is valid. However, it is computationally infeasible to use the public component to forge a signature.

One example of such a signature scheme is the RSA public-key encryption system. In such a system, each user has a public key consisting of a modulus n and an exponent e, where n is a product of two secret primes p and q. The private component is an exponent d such that $ed=1 \pmod{(p-1)(q-1)}$.

To sign a message M with an RSA key pair, the user computes

$S=M^d \pmod n$.

where the result S is the signature. In order to verify the signature, a user simply computes

$S^e=M^{ed}=M \pmod n$.

The signature verifies correctly if the result of computing $S^e \pmod n$ is the message that the signature is for, i.e. $S^e=M \pmod n$. Thus, a user must know d in order to generate a signature.

Public key signature schemes, however, are slow and a user can only sign messages that are smaller than n (when encoded in the ring Z/nZ). One solution is to hash the message M with a cryptographic hashing scheme (e.g. MD5 or SHA), and then sign the hash. The resulting hash is usually much smaller than the message and hence easier to sign.

In addition, generating two messages with the same hash is computationally infeasible, so it is extremely difficult to generate two messages which will have the same signature. Therefore, the following protocol is an RSA-like signature protocol which will preferably be used whenever a user or central controller **200** needs to sign and verify messages and will be known as $S_{SKS}(M)$:

1. Alice generates a message M which she wishes to sign.
2. Alice computes h=H(M), the one-way hash of M with a predetermined hashing algorithm.
3. Alice computes
   $S=h^d \pmod n$
   which is her signature. Hence,
   $S_{SKS^A}(M)=(H(M))_{SKS^A} \pmod n$.

The following protocol can be used by any user to verify Alice's signature:

1. Bob receives a message M and corresponding signature S, which he wants to verify. He believes that Alice generated the signature.
2. Bob computes $M'=S_{PKS^A} \pmod n$ where n is Alice's public modulus (it is specified as part of PKS_A).
3. Bob verifies that M=M'. If they match, then Alice's signature verifies successfully. Otherwise the verification fails.

Most of the protocols described require public encryption keys or private signature keys (or both). Each user communicating with central controller **200** should receive encrypted messages from central controller **200** and sign messages that they send to central controller **200**. Hence, each user in the system requires a public/private encryption key pair and a public/private signature key pair. As noted above, these pairs could be the same pair in systems like RSA.

Generating a key pair, either signature or encryption, depends heavily upon the intended algorithm. A brief example for generating RSA encryption (and signature) keys is shown below.

1. Central controller **200** determines the size for the public key. Typically, a 768-bit key is the recommended minimum, but 1024-bits provide a better minimum.
2. Central controller **200** generates two primes p and q such that p>sqrt(pq)>q, and p and q are not close together (i.e. they are both roughly sqrt(n) in size, but different in size by two or three bits).
3. Central controller **200** computes n=pq. This is the public modulus.
4. Central controller **200** chooses a public exponent e. Common choices are 3, 17, and 65537 ($2^{16}+1$).
5. Central controller **200** computes the private exponent d by finding d such that
   $ed=1 \pmod{(p-1)(q-1)}$.
   Central controller **200** can do this using the extended Euclidean Algorithm.

Monster Worldwide, Inc. Exhibit 1010 (p.210/1328)

6. Central controller **200** publishes n and e as the public key. e is the public exponent which people use to encrypt messages to the public key user (a party, requestor or central controller **200**) or to verify the signature (if the pair is the signature pair). The secret exponent, d, is what is used to decrypt messages sent to the user or to generate signatures.

The primes that central controller **200** chooses are preferably chosen at random. If an attacker can determined and q, then the attacker can also determine d. Several tests exist for determining whether a randomly chosen number m is prime or not. Typically one chooses a random number m and then uses primality tests to determine the first prime greater than or equal to m.

When encrypting a message to be transmitted or verifying a signature, there needs to be a way of verifying the appropriate public key. One common way is to implement a hierarchical certification system in which each valid public key has a corresponding key certificate. The key certificate is signed by another user's private signature key higher up in the key hierarchy. At the top of the hierarchy is the private signature key of the certificate authority, whom everyone automatically trusts. In this case, the certificate authority would be central controller **200**.

The purpose of a certificate is to bind together in some authenticated way a public key, and a set of statements about this public key. The most important statement made is usually who owns the public key. Other potentially important statements might deal with what the key is and is not authorized to do, and when the key expires.

The best-known standard for key certificates is X.509. More detailed information on the construction of X.509 certificates can be found in CCITT, Dract Recommendation X.509, "The Directory-Authentication Framework," Consultation Committee, International Telephone and Telegraph, International Telecommunications Union, Geneva, 1989 or RSA Laboratories, "PKCS #6: Extended-Certificate Syntax Standard," Version 1.5, November 1993.

In a preferred embodiment of the invention, central controller **200** has at least one signature key pair for which everyone using the system knows the public signature key. In one embodiment of the invention, central controller **200** will use two signature key pairs: one key pair for signing key certificates and one key pair for use in the rest of the protocols described. Central controller **200** keeps the certificate authority signature pair under lock and key except for when a key certificate needs to be signed. On the other hand, the other signature key pair is available at all times.

Each time a new user (a party or requestor) registers with central controller **200**, the certificate authority signature key is used by central controller **200** to sign a unique signature key pair for the user. This needs to be done before a user uses their signature key pair for the first time. In one embodiment of the invention, central controller **200** generates a signature key pair and signed key certificate for the user. In an alternate embodiment, the user creates his own key pairs.

Once a user involved in the system has a signed key certificate for his public signature key, he can then use that signature key to sign a key certificate for his public encryption key. Central controller **200**, acting as the certificate authority, can also sign the key certificates for encryption keys. This has the advantage of reducing the number of signature verifications. In an embodiment of the present invention, the same method for generating signature key pairs is used for generating encryption key pairs.

A user follows the following basic protocol when registering with central controller **200**. Suppose that Alice is such a user:

1. Alice obtains a signature key pair.
2. Alice generates a key certificate for her public signature key, sends a copy of the certificate and the public key to central controller **200**, and asks central controller **200** to sign the certificate.
3. Central controller **200** sends Alice a copy of the signed certificate.
4. Alice obtains an encryption key pair.
5. Alice generates a key certificate for her public encryption key and signs it with her private signature key.
6. Alice sends a copy of her public encryption key, along with a copy of the signed key certificate, to central controller **200**.

After carrying out this protocol, Alice has a signed signature key and a signed encryption key. Furthermore, any user who wishes to send an encrypted message to Alice or verify her signature can obtain the public key component from central controller **200**.

For most of the protocols described used in the invention, it is assumed that central controller **200** stores signatures and the public components for all signature keys used in the system. In addition, it is assumed that each user has a copy of the public components of both of the central controller **200**'s signature keys. Most communication in system **100** occurs between parties and central controller **200** and between requestors and central controller **200**. Where a requestor and a party communicate directly, each obtains copies of the other user's public signature and encryption keys from central controller **200**.

System **100** may be prone to attempted infiltration, or "attacks," if the requestor and central controller **200** do not use an interlock protocol. Schneier et al., "Automatic Event-Stream Notarization Using Digital Signatures," in *Advances in Cryptology, Proceedings of the Cambridge Protocols Workshop* 96, Springer-Verlag, 1996. The interlock protocol "locks" the signatures generated by both users of a protocol to a particular instance of the protocol. This is accomplished by having each user sign a packet which the other user randomly generates. This causes the protocol to be non-deterministic and hence the signatures from one instance do not apply to another. The interlock protocol is described briefly below. Suppose that a party wishes to send a message C to central controller **200**:

1. The party generates a random number R_0 and sends
   $M_0=R_0$, $S_{SKS_p}(R_0)$ to Central controller **200**.
2. Central controller **200** verifies the party's signature. Central controller **200** then generates a random number R_1 and sends
   $M_1=R_1$, $S_{SKS_{cc}}(H(M_0),R_1)$
   to the party.
3. The party verifies central controller **200**'s signature. Central controller **200** then sends
   $M_2=C,S_{SKS_p}(H(M_1),C)$
   to central controller **200**.

The party and central controller **200** both sign packets using values which cannot be known before the protocol starts. Central controller **200** cannot predict R_0, so it cannot predict what M_0 will look like. Similarly, the party cannot predict R_1 so he cannot predict what M_1 will look like. Hence, each of them must see the packets before they generate the signatures which means that anyone trying to impersonate the party must have the capability of generating signatures on his behalf This effectively thwarts a replay attack, which can be used to prevent an attacker from gaining, information as demonstrates next.

Suppose an attacker Eve observes a party sending some encrypted packets to central controller **200**. Although Eve

Monster Worldwide, Inc. Exhibit 1010 (p.211/1328)

does not know what the packets contain, she might be able to determine that they contain a resume. If a period of time passes in which the party and central controller **200** do not communicate and then central controller **200** sends the party an encrypted message, Eve's confidence that the party sent a resume should increase. Now, if Eve were to send the same encrypted message to central controller **200** that the party originally sent, eventually central controller **200** will send another encrypted message to the party. The attack that Eve (acting as a requestor) can mount is that she could submit one or more legitimate search requests to central controller **200** and wait for the results. By paying attention to how the size of the response to the request varies, Eve can deduce some information about the party's data. This sort of attack violates the party's privacy. By using the interlock protocol, Eve cannot replay the party's packets to central controller **200** because she won't be able to complete the interlock protocol.

System Operation

The operation of system **100** is now described in connection with the flow diagrams shown in FIGS. **5**,**6**,**7**,**8** and **9**. FIG. **5** illustrates a flow diagram of a method for providing anonymous communication in accordance with one embodiment of the invention.

As shown in FIG. **5**, central controller **200** receives encrypted party data and encrypted requestor data (step **500**). Such encrypted party data and requestor data preferably originates from party terminals **300** and requestor terminal **400**, respectively. In one embodiment, party terminals **300** prompt respective parties to enter party data by displaying requests for information on video monitor **330**. For instance, in the employment search example, video monitor **330** would request information that may be of interest to an employer, such as the candidate's identity, the candidate's address, the candidate's vital statistics, the candidate's work experience, the candidate's educational background, and the candidate's interests. The party would enter party data using input device **345**. Cryptographic processor **335** would encrypt the entered party data and modem **350** would transmit the encrypted party data to central controller **200** via network **110**.

Requestor terminal **400** preferably operates in a similar manner to prompt a requestor for requestor data, receive and encrypt the requestor data, and transmit encrypted requestor data to central controller **200**. Central controller **200** also assigns a pseudonym to each party and requestor whose party data and requestor data is stored in databases **255** and **260**, respectively.

After receiving the encrypted party data and requestor data, cryptographic processor **210** of central controller **200** decrypts the received data (step **500**). CPU **205** of central controller **200** stores the decrypted data in databases **255** and **260**, respectively (step **500**).

Central controller **200** receives a search request to identify those parties whose party data satisfies certain criteria (step **510**). In a preferred embodiment, the search request originates from requestor terminal **400**, where a requestor entered the search request. Before requestor terminal **400** transmits the search request, cryptographic processor **435** of terminal **400** preferably encrypts the search request. Cryptographic processor **210** decrypts the encrypted search request upon receipt at central controller **200**. Central controller **200** then searches party data database **255** and, in response to the search, transmits certain information to requestor terminal **400** and party terminal **300** (step **510**).

FIGS. **6**A and **6**B illustrate a flow diagram showing step **510** in more detail. First, central controller **200** receives search criteria from requestor terminal **400** (step **600**). This search criteria may include, for example, certain employment qualifications or educational background that an employer is interested in.

In response, central controller **200** searches database **255** for party data satisfying the search criteria (step **610**). Controller **200** then transmits to requestor terminal **400** the results of the search, e.g., number of parties that it found to have party data satisfying the criteria (step **620**). Alternatively, the number of parties would be transmitted to requestor terminal **400** along with pseudonyms for each of those parties.

Depending on the number of parties found, the requestor may refine or modify the search criteria. If the requestor chooses to modify the search criteria, the requestor enters the new search criteria into requestor terminal **400**, which transmits the search criteria to central controller **200** (step **630**), and steps **610** and **620** are repeated.

Otherwise, central controller **200** determines whether the requestor requests party data about those parties found as a result of the search (step **640**). Central controller **200** does not transmit any further data to the requestor at requestor terminal **400** and the transmission ends (step **645**).

If the requestor chooses to request party data (step **640**), the requestor enters the party data request into requestor terminal **400**, which transmits the request to central controller **200**. Central controller **200** transmits an authorization request to party terminals **400** for authorization to release respective parties' party data (step **650**).

The party receiving the request for authorization can indicate whether to authorize central controller **200** to release some or all of its party data by entering one of three responses into party terminal **300** (step **660**). The responses are sent to central controller **200**. If central controller **200** receives a response that indicates that the party does not authorize release of any party data, central controller **200** does not provide any party data to requestor terminal **400**, and the transaction ends (step **661**). If, on the other hand, central controller **200** receives a response that indicates that the party authorizes release of some or all of its party data, central controller **200** transmits that party data to requestor terminal **400** for the requestor (step **662**).

Central controller **200** could also receive a response asking for data about the requestor before authorizing release of its party data (step **663**). If so, central controller **200** transmits a query to the requestor at requestor terminal **400** asking for authorization to release requestor data to the party (step **670**). If requestor does not authorize release of any requestor data to the party (step **680**), central controller **200** does not release any requestor data to the party and the transaction ends (step **685**). If the requestor does authorize release of some or all of the requestor data to the party (step **680**), central controller **200** transmits the authorized requestor data to the party (step **690**). Central controller **200** then awaits the party's response to see whether central controller **200** is authorized to release party data.

To ensure the parties' authorization to release their party data is valid, permission certificates can be used in an alternate embodiment of the present invention. For example, in an employment system embodiment, parties who use the system may not want anyone to know they are hunting for a job. Candidates may not want any of the people they work with to know. As a result, the party would like explicit control over who sees their resume. Therefore, whenever

Monster Worldwide, Inc. Exhibit 1010 (p.212/1328)

central controller **200** gets a request for a release of party data, central controller **200** needs to obtain explicit permission from the party to send the party's data to the requestor. When a party decides to release his party data, he can be sure his data will be released only to the requestor making the request. The following is a preferred protocol for a party to issue a permission certificate:

1. A requestor "A" submits a request to release party data J and to central controller **200** in order to find out more about the party.
2. Central controller **200** assigns a unique transaction ID, T, to the request and creates a modified request J'=(J,T). The transaction ID, T, helps ensure that each job description (and hence permission certificate) is unique.
3. Central controller encrypts J' using the party's public encryption key and sends the encrypted message to the party. Central controller sends
   $M_0=E_{PKE_A}(J',S_{SKS_T}(PKE_A,J'))$
   to the party. The party's public key is included as part of the information that central controller **200** signs so a third party cannot forward a copy of a job description they received from central controller **200** to another party.
4. The party decrypts the message to retrieve J', verifies central controller **200**'s signature, reads the request, and decides if he wants to release his party data. If he doesn't, then he stops the protocol here.
5. The party generates a message M containing the following information:
   - A pre-defined string which states that he gives his permission to release his party data to the requestor.
   - A hash of the request H(J'). Note, this is unique to this permission certificate since the transaction ID is unique to the job description.
   - A string which states the details about how he wants her party data released, whether or not he wishes to remain anonymous, etc.
6. The party signs the message, encrypts it using central controller **200**'s public encryption key and sends it to central controller **200**. Hence, she sends
   $M_1=E_{PKE_T}(M,S_{SKS_A}(M))$
   to central controller **200**.
7. Central controller **200** decrypts the message to retrieve M, verifies the party's signature, and transmits the party's data to the requestor.

Because the party signs the message that central controller **200** sent him in the first step, his signature will only work for the job description that central controller **200** sent him. Hence, central controller **200** cannot use the permission certificate for a different job description. This assumes, of course, that the request to release party data contains information unique to that request, such as a transaction ID number. Central controller **200** embeds the transaction ID in the request to release party data message.

In an alternative embodiment, central controller **200** could assign a different transaction ID to each request and party. Hence, two different parties cannot easily check that they are getting the same request by comparing transaction IDs.

The same protocol can be used in any other situation which also requires a permission certificate. For example, central controller **200** needs to obtain permission from a requestor before releasing his requestor data to a party.

Returning to FIG. **5**, central controller **200** can receive an authentication request to verify the authenticity of the origin, authorship, and/or integrity of party data or requestor data (step **520**). Upon receiving this request, central controller **200** verifies the data and transmits a verification status to the party or requestor requesting data verification (step **520**). Step **520** is described in greater detail in connection with FIG. **7**. Central controller **200** receives a verification request from a requestor for verification of party data (step **700**). As described above, this verification may include verifying the authenticity of any one of the origin, authorship, and integrity of the party data stored in databases **255**.

In response, central controller **200** transmits a verification status request to a verification authority to verify the party data (step **710**). For instance, in the employment services example, the party data to be verified may include a university from which a candidate received an advanced degree. In that case, central controller **200** could transmit a verification status request to the candidate's purported educational institution to verify that the candidate did, in fact, receive an advanced degree from that institution.

When central controller **200** receives a response to its request indicating the verification status of the party data, central controller **200** stores the verification status in verification database **270** (step **720**), and transmits that verification status to the requestor at requestor terminal **400** (step **730**).

The method shown in FIG. **7** could be adapted to verify requestor data. In that case, central controller **200** receives a request from a party to verify requestor data and transmits a request to a verification authority. When central controller **200** receives the verification status from the verification authority, it transmits the verification status to the party.

Returning to FIG. **5**, central controller **200** can establish an anonymous communications channel between a party and requestor (step **530**). In this way, the party and the requestor can reveal or request information to and from each other. As described above, the communications channel can be real-time or non-real-time. FIG. **8** shows a flow diagram illustrating one embodiment of a method for opening a communications channel between party terminal **300** and requestor terminal **400** and FIG. **9** shows a flow diagram illustrating one embodiment of a method for managing the communication between party terminal **300** and requestor terminal **400**. After receiving a communications channel request from a requestor to open a communications channel with a party (step **800**), central controller **200** transmits a communication request to the party at party terminal **300** (step **810**). Preferably, the communication request asks the party whether it agrees to engage in a real-time or non-real-time communication with the requestor.

If central controller **200** receives a response indicating that the party does not agree to engage in communication with the requestor (step **820**), then central controller **200** does not open the communications channel and the transaction ends (step **830**). If central controller **200** receives a response indicating that the party agrees to the request (step **820**), central controller **200** opens a communications channel between party terminal **300** and requestor terminal **400** (step **840**). The communications channel can be set up as either a real-time or non-real-time connection including an audio system (i.e., a telephone system), an electronic messaging system, and a video communication system. In one embodiment, the communications channel includes a modification processor for modifying voice and/or video.

After opening the communications channel, central controller **200** debits the requestor's billing account stored in database **275** and transmits a bill to the requestor (step **850**). Central controller **200** could also collect payment from the requestor using other payment methods including: on-file credit card, periodic statement billing, account debit, and digital cash. Further, in one embodiment, central controller

Monster Worldwide, Inc. Exhibit 1010 (p.213/1328)

200 transmits payments to parties for party activities including: allowing central controller 200 to maintain party data in party data database 255, communicating with requestors, and releasing party data.

FIG. 9 illustrates a flow diagram of the method of step 530 for establishing a communications channel, in accordance with one embodiment of the invention. Central controller 200 receives a message from a requestor addressed to a particular party by pseudonym (step 900). Central controller 200 processes the message to remove any information that would reveal the identity of the requestor (step 910) in order to maintain the requestor's anonymity. Central controller 200 transmits the processed message to the party at party terminal 300 (step 920). Central controller 200 receives a response to the message from the party, removes any information that would reveal the identity of the party (step 940), and transmits the processed response to the requestor (step 950).

Removing identity information may also include the use of voice and/or video modification processors in step 910 and 940. Steps 900–950 are repeated to allow multiple messages to pass between the party and the requestor, while maintaining the anonymity of the party and requestor. In one embodiment, central controller 200 debits the requestor billing account according to the usage of the communications channel between the party and the requestor (step not shown). Central controller 200 can measure usage of the communications channel using one of several methods, including: number of messages exchanged, time that central controller 200 maintains the communications channel, the requestor's status (i.e., premium customers pay less), and geographic location of party terminal 300 and/or requestor terminal 400.

Central controller 200 collects payment for certain transactions performed. In accordance with one embodiment of the invention, central controller 200 transmits a bill to the requestor at requestor terminal 400 for each transaction and debits the requestors account (step 540), which is stored in database 275 of central controller 200. In alternative embodiments, the payment scheme can be modified or varied to charge either the requestor or the party or both for various transactions executed by system 100, and particularly central controller 200. In a further embodiment, the payment scheme involves paying the party for submitting information to central controller 200, opening a communications channel, and/or releasing party data to a requestor. In one embodiment of the system, a party is payed each time he authorizes the release of his party data to a requestor. Central controller 200 will monitor the transactions to ensure that parties do not release information to the same requestor more than once in a given period of time.

As stated earlier, maintaining the anonymity of the party and requestor can be important to their communications. For example, an employer may not want its competitors to know that it is looking to expand its staff because it may give them an advantage. An attacker may attempt to examine the message traffic coming in and out of central controller 200 to expose the identity of a user of the system. A way to prevent this type of attack is to use an anonymous mix protocol during communication between a party or requestor and central controller 200.

An anonymous mix uses a protocol to make it very difficult for anyone to trace the path of a message which passes through the mix. The anonymous mix takes outgoing messages from central controller 200 and randomly varies both the length of the message as well as the timing of its delivery. An incoming message of two hundred kilobytes, for example, might be expanded to three hundred kilobytes by adding random characters at the end. An attacker would thus be unable to correlate (by length of message) the incoming requestor query with requests to release party data sent to the various parties. By adding a random time delay in the processing of incoming requests, central controller 200 also prevents an attacker from correlating (based on time) incoming requests with outgoing requests. An example of the anonymous protocol employed in the present invention is set forth below.

Notation and Conventions for this protocol:

a. $PKE_{PKU}(X)$ represents the public-key encryption of X under public key PK_U.

b. $SIGN_{SKU}(X)$ represents the digital signature of X under private key SK_U.

c. $E_{K0}\}(X)$ represents the symmetric encryption of X under key K_0.

d. PK_U represents the public key of user U.

e. SK_U represents the private key of user U.

f. D_U represents the identification number of user U.

g. X,Y represents the concatenation of X with Y.

Keys used in this protocol:

a. PK_M is the anonymous mix public key.

b. ID_B is Bob's ID.

c. PK_B is Bob's public key.

d. SK_B is Bob's private key.

When Alice sends Bob a message through anonymous mix, the following steps could take place:

a. Alice wishes to send message T to Bob anonymously. She first forms:
K_0=a random session key.
P_0=an all-zero string of some random length.
$X_0=PKE_{PKM}(K_0)$.
$M_0=X_0,E_{K0}(ID_B,P_0,T)$.
Alice then sends M_0 to the anonymous mix 180. Note that Alice may also have encrypted and digitally signed the message she's sending to Bob. This has no bearing at all on how the anonymous mix processes it. P_0 disguises the size of the message, making it difficult, or virtually impossible, to correlate incoming messages with outgoing messages.

b. The anonymous mix receives M_0. Using X_O, anonymous mix decodes the random session key K_0 using anonymous mix private key SK_M and then using K_0, ID_B, T and P_O are decrypted. The anonymous mix looks up Bob's public key from ID_B, and then forms:
K_1=a random session key.
P_1=an all-zero string of some random length.
$X_1=PKE_{PKB}(K_1)$.
$M_1=X_1E_{K1}(P_1,T)$
Anonymous mix waits some random amount of time before sending M_1 to Bob. During this time, it is processing many other messages, both sending and receiving them.

c. Bob receives M_1. He decrypts it using his private key, SK_B and recovers T. He then does whatever he needs to with T.

In order to make messages that pass through an intermediary anonymous mix anonymous, a large volume of messages coming in and out are reviewed. A random delay involved in forwarding those messages may also be required. Otherwise, it is possible for an opponent to watch messages going into and coming out of anonymous mix, using this information to determine the source and destina-

Monster Worldwide, Inc. Exhibit 1010 (p.214/1328)

tion of each message. Similarly, messages must be encrypted to the anonymous mix, so that the messages can be decrypted and re-encrypted with a different key. Also, messages may need to be broken into many pieces or padded with large blocks of data, to avoid having message lengths give away information. Anonymous mix either knows everyone's public keys or their public keys are sent along with their identities. Every user is assumed to know anonymous mix's public keys. The anonymous mix, used in combination with encryption and digital signatures discussed earlier, provides a high level of anonymity for both parties and requestors.

Anonymity may also serve to prevent a requestor and party from contacting each other outside the system in order to ensure that payment is received for bringing the two together. In this embodiment, central controller **200** forces anonymity by blinding one or both parties. The requestor, for example, may not see the name of the party until the requestor's account has been debited.

FIGS. **8** and **9** illustrate a method in which a communications channel between a party and requestor is established and managed by system **100** without either the party or the requestor learning the other's identity. While FIGS. **8** and **9** illustrate methods in which central controller **200** establishes the communications channel at a requestor's request, in alternative embodiments, a communications channel can be established at a party's request. In that case, central controller **200** receives a request for a communications channel from party terminal **300**, transmits the request to requestor terminal **400**, and establishes a communications channel in accordance with the requestor's response.

While the invention, as embodied and described in connection with system **100**, can be applied to the employment search process, the invention can also be applied to a variety of other areas involving anonymous communications. For instance, system **100** can be used in connection with matchmaking (i.e., providing dating services). People, or "parties," interested in dating can enter personal data, or "party data," about themselves at party terminals **300**. For each party, the party data may include the party's identity, the party's vital statistics, the party's background, and the party's interests. Central controller **200** and party terminals **300** receive and transmit the party data in the manner described above.

People, or "requestors," who would like to find parties whose personal data satisfies their interests or tastes can enter a search request at requestor terminal **400**. In one embodiment, requestors enter data, or "requestor data," about themselves at request terminal **400**, which encrypts and transmits the requestor data to central controller **200**. In addition, each requestor enters, at request terminal **400**, a search request specifying attributes about people that the requestor would like to date. For instance, the search request may specify that the requestor is interested in identifying men that are at least 6' tall and are college-educated. Request terminal **400** encrypts the search request and transmits the encrypted search request to central controller **200** for processing, as described above.

In response to the search request, central controller **200** preferably transmits to requestor terminal **400** the number of people found to satisfy the criteria in the request, as described above in connection with FIG. **6**A. In the example given above, central controller **200** would transmit to requestor terminal **400** the number of people who indicated that they are men, 6' tall, and college-educated, as revealed by party data database **255**. Central controller **200** releases party data and requestor data to the requestor and parties, respectively, in the manner described above in connection with FIG. **6**B. Central controller **200** can verify data, as described in connection with FIG. **7**, and open a communications channel between a requestor and a party, as described in connection with FIGS. **8** and **9**. When central controller **200** opens the communications channel, the requestor and the party can exchange adequate information about themselves to decide whether to agree to a date without subjecting themselves to any risk if either should decide not to agree to the date.

The employment search and dating services examples demonstrate how the invention can: allow a requestor to search for parties meeting certain criteria, allow parties to control the release of information about themselves, and provide a communications channel between a requestor and the parties while maintaining the anonymity of the parties and the requestor from each other. The invention, however, is not limited to those types of applications. Other applications include finding and interviewing consultants or freelancers for a specific project, auditioning actors and actresses, seeking a merger partner, and engaging in various commerce-based applications in which controlled anonymity by any party would be beneficial.

The invention can be used in applications where the system establishes a communications channel between parties and authenticates information about the parties, while maintaining the anonymity of at least one of the parties. In one embodiment, system **100**, as described above, could be used for such applications. This embodiment allows two parties to communicate while each party is ensured that the information being communicated is valid. For example, in the case of a "whistle-blowing" application (outlined below) an employer can be certain that the information he receives is from an employee within his organization. The methods illustrated by the flow diagrams of FIGS. **5–9** could be readily adapted for these applications.

By way of example, system **100** could be used as a "whistle-blowing" system to allow employees of a company to anonymously report legal and policy violations without risking retribution by the company's management. The employee reporting a violation would preferably enter, into party terminal **300**, data about the violation and data that can be independently verified as originating from the employee claiming the violation. The employee is referred to hereafter as the "party" and the data entered into party terminal **300** is referred to hereafter as the "party data." In one embodiment, the party data may include an employee identification number uniquely identifying each employee of the company. Party terminal **300** encrypts and transmits the party data to central controller **200**, preferably in the manner described above.

A company representative, referred to as the "requestor," would use requestor terminal **400** to access the party data stored in central controller **200**. After accessing the party data about the violation, the requestor could submit a request at requestor terminal **400** to have some or all of the party data authenticated. For example, central controller **200** could verify that the party is, in fact, an employee of the company by comparing an employee identification number contained in the party data with a list of active company employee identification numbers. If the number matches, central controller **200** would transmit a response to requestor terminal **400** confirming that the party is an active employee of the company.

The requestor, or the party, could enter a request into requestor terminal **400**, or party terminal **300**, for central controller **200** to open a communications channel with the party, or the requestor. Central controller **200** would open a

Monster Worldwide, Inc. Exhibit 1010 (p.215/1328)

communications channel, as described above in connection with FIGS. **8** and **9**, to allow the party and the requestor to communicate, while maintaining the party's anonymity. This would allow the employer to question the employee about details relating to the incident in question, without the employee revealing his identity.

In another example, system **100** could be used as a system to allow parties to remain anonymous while negotiating an agreement. For instance, criminals, or rule offenders, anonymously offer to turn themselves in, while negotiating favorable treatment. In this case, the criminals, or rule offenders, would represent the "parties" and law enforcement, or rule enforcers, would represent the "requestors." In a preferred embodiment, a party would enter, at party terminal **300**, information ("party data") about his violation and data that can be independently verified as originating from the party claiming the violation. The party data can include the party's identity, which is preferably only used by system **100** for verification purposes. Party terminal **300** would encrypt and transmit the party data to central controller **200**, in the manner described above. A requestor would use requestor terminal **400** to access the party data stored in central controller **200**.

The requestor could enter a request for authentication of the party data into requestor terminal **300**, which would transmit the request to central controller **200**. Central controller **200** would verify some or all of the party data, as described above, and transmit a verification status message to requestor terminal **400**. Upon request from either party terminal **300** or requestor terminal **400**, central controller can establish an anonymous communications channel with the other terminal, provided that the party and the requestor agree to engage in the communications channel. As described above, this communications channel can be real-time or non-real-time.

Under the "plea bargaining" example, the invention allows the requestor and the party to negotiate the terms of the party's sentence or punishment for committing the violation before the party reveals his identity. If negotiations fail, the party does not subject himself to any risk that the requestor will learn his identity simply because he initiated communication. The requestor, of course, can use whatever information the party revealed about himself during the course of the negotiation to learn the identity of the party.

Besides the whistle-blowing and plea bargaining examples, the invention also applies to other applications, such as authenticated phone-based tip lines and licensing negotiations where a licensee does not want to reveal the size of his company for fear of being charged more by the licensor.

Conclusion

It will be apparent to those skilled in the art that various modifications and variations can be made in the system and method of the present invention without departing from the spirit or scope of the invention. The present invention cover the modifications and variations of this invention provided they come within the scope of the appended claims and their equivalents.

What is claimed is:

1. A method for operating a computer system to facilitate an exchange of identities between two anonymous parties, comprising the steps of:

receiving from a first party first data including an identity of said first party;

receiving from said first party at least two first-party rules for releasing said first data including a rule for releasing said identity of said first party;

receiving from a second party a search request comprising at least one search criterion;

receiving from said second party second data including an identity of said second party;

receiving from said second party at least two second-party rules for releasing said second party data including a rule for releasing said identity of said second party;

processing said search request to determine if said first data satisfies said search criterion; and

if said first data satisfies said search criterion, then

exchanging said first and second data, except said identities of said first and second parties, between said first and second parties in accordance with said first-party and second-party rules,

after said exchanging step, upon satisfying said first-party rule for releasing said identity of said first party, transmitting said identity of said first party to said second party, and

after said exchanging step, upon satisfying said second-party rule for releasing said identity of said second party, transmitting said identity of said second party to said first party.

2. A method in accordance with claim **1** wherein said step of receiving from a first party at least two first-party rules includes receiving at least one first-party rule before receiving said search request and storing said at least one first-party rule.

3. A method in accordance with claim **2** wherein said step of receiving from a first party at least two first-party rules includes requesting at least one first-party rule from said first party after receiving said search request.

4. A method in accordance with claim **3** wherein said at least one first-party rule received after said search request includes an authorization to release said identity of said first party.

5. A method in accordance with claim **1** wherein said step of receiving from said second party at least two second-party rules includes receiving at least one second-party rule before receiving said search request and storing said at least one second-party rule.

6. A method in accordance with claim **5** wherein said step of receiving from a second party at least two second-party rules includes requesting at least one second-party rule from said second party after processing said search request.

7. A method in accordance with claim **6** wherein said at least one second-party rule received after processing said search request includes an authorization to release said identity of said second party.

8. A method in accordance with claim **1** and further including, subsequent to said step of exchanging said first and second data, the step of receiving a request to establish a communications channel between said first and second parties prior to releasing the identity of at least one of said first and second parties.

9. A method in accordance with claim **8** and further including the step of establishing said communications channel between said first and second parties.

10. A method in accordance with claim **1** wherein at least one of said first-party rules is conditional on the content of said second data.

11. A method in accordance with claim **1** wherein at least one of said second-party rules is conditional on the content of said first data.

12. A system for facilitating an exchange of identities between two anonymous parties, comprising:

means for receiving from a first party first data including an identity of said first party;

Monster Worldwide, Inc. Exhibit 1010 (p.216/1328)

means for receiving from said first party at least two first-party rules for releasing said first data including a rule for releasing said identity of said first party;

means for receiving from a second party a search request comprising at least one search criterion;

means for receiving from said second party second data including an identity of said second party;

means for receiving from said second party at least two second-party rules for releasing said second party data including a rule for releasing said identity of said second party;

means for processing said search request to determine if said first data satisfies said search criterion; and

means for, if said first data satisfies said search criterion,

exchanging said first and second data, except said identities of said first and second parties, between said first and second parties in accordance with said first-party and second-party rules,

after said exchanging, upon satisfying said first-party rule for releasing said identity of said first party, transmitting said identity of said first party to said second party, and

after said exchanging, upon satisfying said second-party rule for releasing said identity of said second party, transmitting said identity of said second party to said first party.

13. A system in accordance with claim 12 wherein said means for receiving from a first party at least two first-party rules includes means for receiving at least one first-party rule before receiving said search request and storing said at least one first-party rule.

14. A system in accordance with claim 13 wherein said means for receiving from a first party at least two first-party rules includes means for requesting at least one first-party rule from said first party after receiving said search request.

15. A system in accordance with claim 14 wherein said at least one first-party rule received after said search request includes an authorization to release said identity of said first party.

16. A system in accordance with claim 12 wherein said means for receiving from said second party at least two second-party rules includes means for receiving at least one second-party rule before receiving said search request and storing said at least one second-party rule.

17. A system in accordance with claim 16 wherein said means for receiving from a second party at least two second-party rules includes requesting at least one second-party rule from said second party after processing said search request.

18. A system in accordance with claim 17 wherein said at least one second-party rule received after processing said search request includes an authorization to release said identity of said second party.

19. A system in accordance with claim 12 and further including, subsequent to said exchanging said first and second data, means for receiving a request to establish a communications channel between said first and second parties prior to releasing the identity of at least one of said first and second parties.

20. A system in accordance with claim 19 and further including means for establishing said communications channel between said first and second parties.

21. A system in accordance with claim 12 wherein at least one of said first-party rules is conditional on the content of said second data.

22. A system in accordance with claim 12 wherein at least one of said second-party rules is conditional on the content of said first data.

23. A system for facilitating an exchange of identities between two anonymous parties, comprising:

a processor; and

a memory connected to said processor and storing a program for controlling the operation of said processor;

said processor operative with said program in said memory to:

receive from a first party and store in said memory first data including an identity of said first party;

receive from said first party and store in said memory at least two first-party rules for releasing said first data including a rule for releasing said identity of said first party;

receive from a second party and store in said memory a search request comprising at least one search criterion;

receive from said second party and store in said memory second data including an identity of said second party;

receive from said second party and store in said memory at least two second-party rules for releasing said second party data including a rule for releasing said identity of said second party;

process said search request against said first data in said memory to determine if said first data satisfies said search criterion; and

if said first data satisfies said search criterion, then

exchange said first and second data, except said identities, between said first and second parties in accordance with said first-party and second-party rules,

after said exchanging operation, upon satisfying said first-party rule for releasing said identity of said first party, transmit said identity of said first party to said second party, and

after said exchanging operation, upon satisfying said second-party rule for releasing said identity of said second party, transmit said identity of said second party to said first party.

24. A system in accordance with claim 23 wherein said step of receiving from a first party at least two first-party rules includes receiving at least one first-party rule before receiving said search request and storing said at least one first-party rule.

25. A system in accordance with claim 24 wherein said step of receiving from a first party at least two first-party rules includes requesting at least one first-party rule from said first party after receiving said search request.

26. A system in accordance with claim 25 wherein said at least one first-party rule received after said search request includes an authorization to release said identity of said first party.

27. A system in accordance with claim 23 wherein said step of receiving from said second party at least two second-party rules includes receiving at least one second-party rule before receiving said search request and storing said at least one second-party rule.

28. A system in accordance with claim 27 wherein said step of receiving from a second party at least two second-party rules includes requesting at least one second-party rule from said second party after processing said search request.

29. A system in accordance with claim 28 wherein said at least one second-party rule received after processing said search request includes an authorization to release said identity of said second party.

Monster Worldwide, Inc. Exhibit 1010 (p.217/1328)

30. A system in accordance with claim 23 and further including, subsequent to said step of exchanging said first and second data, the step of receiving a request to establish a communications channel between said first and second parties prior to releasing the identity of at least one of said first and second parties.

31. A system in accordance with claim 30 and further including the step of establishing said communications channel between said first and second parties.

32. A system in accordance with claim 23 wherein at least one of said first-party rules is conditional on the content of said second data.

33. A system in accordance with claim 23 wherein at least one of said second-party rules is conditional on the content of said first data.

* * * * *

Monster Worldwide, Inc. Exhibit 1010 (p.218/1328)

(12) INTERNATIONAL APPLICATION PUBLISHED UNDER THE PATENT COOPERATION TREATY (PCT)

(19) World Intellectual Property Organization
International Bureau

(43) International Publication Date
1 November 2001 (01.11.2001)

PCT

(10) International Publication Number
WO 01/82185 A2

(51) International Patent Classification[7]: G06F 17/60

(21) International Application Number: PCT/US01/12910

(22) International Filing Date: 20 April 2001 (20.04.2001)

(25) Filing Language: English

(26) Publication Language: English

(30) Priority Data:
60/199,038 21 April 2000 (21.04.2000) US

(71) Applicant: ROBERT HALF INTERNATIONAL, INC. [US/US]; 2884 Sand Hill Road, Suite 200, Menlo Park, CA 94025 (US).

(72) Inventors: **PINEDA, Andy**; 775 East Blithedale #276, Mill Valeey, CA 94941 (US). **MAYER, Julie**; 218 Waller Street, San Francisco, CA 94102 (US). **SPIECZNY, Steven**; 510 Jersey Street, San Francisco, CA 94114 (US). **SCHMIDT, David, Scott**; 1690 Broadway Street, apt. 708, San Francisco, CA 94109 (US). **SOLOFF, David**; 1035 Deharo #2, San Francisco, CA 94107 (US). **ROSE, Sparky**; 32 Ford Street, San Francisco, CA 94114 (US). **REILLY, Colleen**; c/o Viant, 650 Townsend Street, San Francisco, CA 94103 (US). **BHAMRE, Neal**; 2941 23rd Avenue, San Francisco, CA 94132 (US).

(74) Agents: **LUDWIG, S., Peter** et al.; Darby & Darby P.C., 805 Third Avenue, New York, NY 10022-7513 (US).

(81) Designated States *(national)*: AE, AG, AL, AM, AT, AU, AZ, BA, BB, BG, BR, BY, BZ, CA, CH, CN, CO, CR, CU, CZ, DE, DK, DM, DZ, EE, ES, FI, GB, GD, GE, GH, GM, HR, HU, ID, IL, IN, IS, JP, KE, KG, KP, KR, KZ, LC, LK, LR, LS, LT, LU, LV, MA, MD, MG, MK, MN, MW, MX, MZ, NO, NZ, PL, PT, RO, RU, SD, SE, SG, SI, SK, SL, TJ, TM, TR, TT, TZ, UA, UG, UZ, VN, YU, ZA, ZW.

(84) Designated States *(regional)*: ARIPO patent (GH, GM, KE, LS, MW, MZ, SD, SL, SZ, TZ, UG, ZW), Eurasian patent (AM, AZ, BY, KG, KZ, MD, RU, TJ, TM), European patent (AT, BE, CH, CY, DE, DK, ES, FI, FR, GB, GR, IE, IT, LU, MC, NL, PT, SE, TR), OAPI patent (BF, BJ, CF, CG, CI, CM, GA, GN, GW, ML, MR, NE, SN, TD, TG).

Published:
— *with declaration under Article 17(2)(a); without abstract; title not checked by the International Searching Authority*

For two-letter codes and other abbreviations, refer to the "Guidance Notes on Codes and Abbreviations" appearing at the beginning of each regular issue of the PCT Gazette.

WO 01/82185 A2

(54) Title: INTERACTIVE EMPLOYMENT SYSTEM AND METHOD

(57) Abstract:

Monster Worldwide, Inc. Exhibit 1010 (p.219/1328)

INTERACTIVE EMPLOYMENT SYSTEM AND METHOD

BACKGROUND OF THE INVENTION:

Field of the Invention

The present invention relates to data processing for business methods, and relates more particularly to interactive systems and methods for matching candidates to available job openings.

Description of the Related Art

With increasing frequency, the Internet is being used to match job candidates and employers. There were approximately 40 million job placement transactions which took place in the United States in 1999. It is estimated that about 10% of these transactions involved the Internet in some manner, e.g., a candidate finding a job posting online, or an employer finding one or more candidates online. With the prospects of increasing economic growth coupled with the surging popularity of the Internet, it has been estimated that the number of job transactions may increase to 48 million by 2003, with a corresponding increase in web-assisted transactions to 40% or more of all such job transactions.

In typical configurations, a web hosting site or other type of addressable network device, allows candidates to store information relating to their education, employment history, job skills, personal references and the like. Candidates may also search listings of available job openings. These sites additionally allow employers to search through profiles of a plurality of candidates to find those with desirable characteristics.

In order to generate revenue, a company which hosts a job-placement web site typically charges employers a subscription fee or a flat fee to post available job listings for a pre-defined period of time and to search the site. Candidates, typically, are not charged a fee to store their profile information or to search stored job listings. However, banner adds and the like are usually placed on

Monster Worldwide, Inc. Exhibit 1010 (p.220/1328)

the site to generate advertising revenues that are generally dependent upon the number of 'hits' a web site receives over a predetermined time. Candidates typically greatly outnumber the number of employers who access a job-placement site. Thus, candidates who access the web site provide a source of revenue by generating hits, even though they are not charged subscription or transaction fees.

While this has been the predominant business model for job-placement web sites of the prior art, a subscription or flat fee rate may be unfair to certain employer-subscribers. For example, a particular employer who subscribes to a job-placement web site may find that the site does not attract a substantial number of qualified or desirable candidates in a particular field of interest. Such an employer-subscriber might then decide that the subscription fees are unjustified or an inefficient allocation of resources and thus, may choose to discontinue subscribing to the site.

Accordingly, there is a need for an interactive employment system and method which generates revenue on the basis of the number of qualified candidates that employers actually find through the use of a job-placement web site. It would be furthermore preferable to charge employers only for those candidates with whom they are particularly interested, rather than charging for all candidates that match a particular job description. In this manner, more employers may choose to continue using a job-placement web site incorporating this business model, since the amount of money they are charged is proportional to the number of suitable and desirable candidates that the employer finds through the site.

BRIEF SUMMARY OF THE INVENTION

In order to address and solve certain of the foregoing shortcomings in the prior art, the present invention provides an interactive employment system which allows a candidate to enter profile data, including identification data, and to match their criteria and then view available job postings. The system further allows an employer to search profile data corresponding to a plurality of candidates and returns search results corresponding to candidates who match the search criteria. The search results can include a percentage match between each profile and the search criteria. The system can also withhold identification data corresponding to each candidate, such as the name and/or contact information for each candidate. After search results have been displayed, the employer can review certain portions of each candidate's profile data, such as previous and current job experience,

Monster Worldwide, Inc. Exhibit 1010 (p.221/1328)

positions held, education level, and the like. The employer can then provide or authorize a payment for each candidate for whom the employer would like to receive the identification data, so that they may contact the candidate through their normal hiring process.

Upon submitting profile and identification data, candidates can specify that certain employers are to be excluded from receiving the identification data altogether. When non-excluded employers receive a candidate's profile, the candidate can be contacted via e.g., an e-mail message, a written letter which is generated and sent to an address designated by the candidate, a facsimile notification, an instant message transmitted to the candidate's browser, and the like.

Further features of the present invention include allowing the candidate to undertake a general skills test in which the candidate answers specific questions. The answers, in turn, may be used to generate a ranking or grading of the candidate. An employer can receive the ranking report for a candidate who undertakes the skills test in exchange for an additional fee.

In one embodiment, a candidate can further enroll in online training programs, such as a continuing education program, specific software application training and the like, to increase the candidate's skill set. A fee to participate in such online training can be charged. For a further fee, the web host or a third party can administer a test of the candidate's skill level related to the received training and provide the results of this test to interested employers upon payment of a fee.

The web site host can charge further fees for providing background checks, such as criminal history checks, credit checks and driving histories for a particular candidate. The web site host may also charge a fee to employers for the provision of payroll and other administrative services for a particular candidate.

BRIEF DESCRIPTION OF THE SEVERAL VIEWS OF THE DRAWINGS

Further aspects of the instant invention will be more readily appreciated upon review of the detailed description of the preferred embodiments included below when taken in conjunction with the accompanying drawings, of which:

FIG. 1 is a block diagram of an exemplary network system for accessing a server which matches candidates to available job openings;

Monster Worldwide, Inc. Exhibit 1010 (p.222/1328)

FIG. 2A is a schematic block diagram of exemplary components of a remote terminal of FIG. 1;

FIG. 2B is a schematic block diagram of exemplary components of the server of FIG. 1;

FIG. 3A is an exemplary candidate profile database stored by the server of FIG. 2B;

FIG. 3B is an exemplary job profile database stored by the server of FIG. 2B; and

FIG. 4 is a flowchart illustrating exemplary steps for locating an available job opening and suitable candidate according to one embodiment of the present invention.

DETAILED DESCRIPTION OF THE PREFERRED EMBODIMENT

Referring now to FIGS. 1-4, wherein similar components of the instant invention are referenced in like manner, a preferred apparatus for matching candidates to available job openings and accompanying methods for using the same are disclosed.

Turning now to FIG. 1, depicted therein is an exemplary computer network 10 through which remote devices 20, 30 may communicate with one or more host servers 12 via network connection 14 in any known manner. Although computer network 10 is preferably an Internet-based network, it can be also a local area network (LAN), a wide-area network (WAN), an intranet environment, an extranet environment, a broadband wireless network or other type of computer or communications network, such as those enabled over public switched telephone networks. Remote devices 20, 30 may be any computing device, such as a personal computer, a workstation, a network terminal or any other device that can communicate with central server 12 over the network connection 14. Remote devices 20, 30 include one or more candidate remote terminals 20a, 20b and one or more employer remote terminals 30a, 30b as described further herein below. Server 12 may include any number of computer servers which cooperate to maintain the system of the present invention and perform the methods for using the same.

In one embodiment of server 12 maintains a web site which is hosted on the Internet. A candidate or employer communicates with the server 12 through remote terminals 20, 30 which can be equipped with hardware and software that accommodates Internet access over network connection 14. Alternatively, the server 12 can host a bulletin board site or a separate community of network servers, such as those maintained by AMERICA ONLINE. In that case, a candidate or an employer communicates with the server 12 by dialing directly into the server 12 using the appropriate remote

Monster Worldwide, Inc. Exhibit 1010 (p.223/1328)

terminal 20, 30 which, in turn, can be equipped with a modem or the like that can transmit and receive data over a public switched telephone network. Other variations and configurations of computer network 10 will be apparent to one of ordinary skill in the art.

Turning now to FIG. 2A, displayed therein are exemplary components of a remote terminal, such as a candidate remote terminal 20a or an employer remote terminal 30a (Fig. 1), which can be used to implement the present invention. Although the descriptions below are applicable to either type of terminal, the components will be discussed with regard to candidate terminals 20 only for the sake of brevity.

The primary component of customer terminal 20a is a processor 21, which can be any commonly available microprocessor, such as the PENTIUM III manufactured by INTEL CORP. The processor 21 may be operatively connected to further exemplary components, such as RAM/ROM 22, a clock 23, input/output devices 24, and a memory 25 which stores one or more operating system and application programs, such as browser 26.

The processor 21 operates in conjunction with random access memory and read-only memory in a manner well known in the art. The random-access memory (RAM) portion of RAM/ROM 22 can be a suitable number of Single In-line Memory Module (SIMM) chips having a storage capacity (typically measured in kilobytes or megabytes) sufficient to store and transfer, inter alia, processing instructions utilized by the processor 21 which can be received from the browser program 26. The read-only memory (ROM) portion of RAM/ROM 22 can be any permanent non-rewriteable memory medium capable of storing and transferring, inter alia, processing instructions performed by the processor 21 during a start-up routine of the customer terminal 20a. Further functions of RAM/ROM 22 will be apparent to one of ordinary skill in the art.

The clock 23 may be an on-board component of the processor 21 which dictates a clock speed (typically measured in MHZ) at which the processor 21 performs and synchronizes, inter alia, communication between the internal components of customer terminal 20a. Further functions of the clock 23 will be known to one of ordinary skill in the art.

The input/output device(s) 24 can be one or more commonly known devices used for receiving operator inputs, network data, and the like and transmitting the same to the user or to host server 12. Accordingly, exemplary input devices may include a keyboard, a mouse, a voice recognition unit and the like for receiving user inputs.

Monster Worldwide, Inc. Exhibit 1010 (p.224/1328)

Output devices may include any commonly known devices used to present data to an operator of central server 12 or to transmit data over the computer network 10. Accordingly, suitable output devices may include a display, a printer and a voice synthesizer connected to a speaker.

Other input/output devices 24 may include a telephonic or network connection device, such as a telephone modem, a wireless modem, a cable modem, a T-1 connection, a digital subscriber line or a network card, for communicating data to and from other computer devices over the computer network 10.

The memory 25 may be an internal or external large capacity device for storing computer processing instructions, computer-readable data, and the like. The storage capacity of the memory 25 is typically measured in megabytes or gigabytes. Accordingly, the memory 25 may be one or more of the following: a floppy disk in conjunction with a floppy disk drive, a hard disk drive, a CD-ROM disk and reader/writer, a DVD disk and reader/writer, a ZIP disk and a ZIP drive of the type manufactured by IOMEGA CORP., and/or any other computer readable medium that may be encoded with processing instructions in a read-only or read-write format. Further functions of and available devices for memory 25 will be apparent to one of ordinary skill in the art.

The memory 25 may store, inter alia, a plurality of programs (not shown) which may include, for example, an operating system such as WINDOWS NT by MICROSOFT CORP. The memory 25 may further store one or more application programs which are necessary to implement the embodiments of the present invention, such as a web browser, e.g. NETSCAPE COMMUNICATOR, for allowing a candidate to view web page information. Memory 25 may contain further programs which contain processing instructions for implementing the methods disclosed herein.

Employer remote terminals 30 may be of a similar configuration to candidate remote terminals 20. Employer remote terminals 30 may further be any computing device capable of transmitting information to and receiving information from server 12.

Turning now to FIG. 2B, depicted therein are exemplary components of a host server 12 which may be necessary to implement the present invention. Server 12 can be any one or more network or web server devices which are operative to communicate with a plurality of remote terminals 20, 30 over the computer network 10. Accordingly, server 12 can include a processor 31, RAM/ROM 32, a clock 33, input/output devices 34, and a memory 35 which may store one or more

Monster Worldwide, Inc. Exhibit 1010 (p.225/1328)

operating system and applications programs. Server 12 preferably stores a database program which maintains one or more databases, such as candidate profile database 36 and a job profile database 37, as described further herein below with respect to FIGS. 3A and 3B. Processor 31, RAM/ROM 32, clock 33, and the operating system programs may be similar in functionality to processor 21, RAM/ROM 22, clock 23 and the operating systems described above with respect to FIG. 2A. Input/out devices 34 may likewise have similar functionality to devices 24 discussed with respect to FIG. 2. However, it is preferable that any network or communication devices used as input/output devices 34 be of the type that can handle high bandwidth or large amounts of network traffic as is consistent with the operation of an Internet web server and the like.

The database program may be any large volume data management software, and is preferably an SQL-based relational database management program of the type manufactured by ORACLE. The database program stores candidate profile data, job profile data and the like as described further below with respect to FIG. 3A and 3B.

Further application programs can include processing instructions for allowing the host server to administer skill tests, conduct background checks with third party web hosting services, and the like. Further programming of the server 12 can allow grading of candidates' answers to administered test, which in turn can be used to generate a ranking or grading of the candidate. An employer may be required to pay a fee to receive the ranking report.

In one embodiment, server 12 is configured to allow a candidate to enroll in online training programs (such as a continuing education program, specific software application training and the like) to increase the candidate's skill set. Candidates may be charged a fee to participate in such online training. For a further fee, the web host or a third party could administer a test of the candidate's skill level. The results of the test could be provided to interested employers, e.g., upon payment of a fee.

The web site host can charge further fees for providing background checks, such as criminal history checks, credit checks and driving histories for a particular candidate. The web site host may further charge a fee and be programmed to provide payroll and other administrative services for a particular candidate.

It is preferred that the host server 12 can direct any remote computing devices 20, 30 to display an appropriate interface, such as one or more pre-formatted web pages so that a user, such as

Monster Worldwide, Inc. Exhibit 1010 (p.226/1328)

a candidate or an employer can interact with the server 12. Accordingly, after a candidate or an employer logs into the server, that user is presented with an introductory web page, which may be written in HTML, XML, JAVA Script, and the like.

Referring now to FIG. 3A, therein is depicted an exemplary format for a candidate profile database 36 managed by server 12, wherein titles of individual fields 40-53 are presented. Further or fewer fields may be provided as will be appreciated by one of ordinary skill in the art. In addition, field titles may be altered from those presented in FIG. 3A without impacting the spirit and scope of the present invention. Furthermore, alternative data structures, other than standard database formats may be employed.

Any of the following fields may be searched by a prospective employer in accordance with the present invention, as described below with respect to FIG. 4. Data can be entered into the database 36 by a candidate accessing the server 12 via a remote terminal 20a. A pre-formatted web page, which may be similar in appearance to FIG. 3A, may allow the candidate to enter appropriate information which is then inserted into the corresponding fields of database 36. Alternatively, a candidate can submit data an alternate format, such as a résumé stored in a word processing format. The alternate format may contain some or all of the data described below, in which case, the data may be parsed by server 12 and inserted into the appropriate fields of candidate profile database 36, in any manner known to one of ordinary skill in the art.

Candidate identifier field 40 preferably contains a name or other identifier of each candidate who submits profile data to server 12. The information stored in candidate identifier may be initially locked by the system until an interested employer has paid a fee for the information to be revealed, as described further below.

Contact information field 41 may store information on how to contact the corresponding candidate. Accordingly, field 41 may contain, a home address, a home telephone number, a cellular or digital telephone number, a pager number, an e-mail address and the like. Like field 40, the information in this field may be locked until appropriate fees have been paid by an interested employer.

Industry field 42 preferably allows a candidate to enter the industry in which he or she is interested in seeking employment. The candidate may select data from a group of predetermined terms or may enter his or her own descriptions. Examples of appropriate industries include

Monster Worldwide, Inc. Exhibit 1010 (p.227/1328)

accounting, finance, banking, brokerage, insurance, computers, information technology, medical and nursing. Other types of industry descriptors may additionally be used.

Title sought field 43 preferably allows the candidate to enter the title of the position in which he or she is interested. The candidate may select data from a group of predetermined terms or may enter his or her own descriptions. Examples of appropriate titles include 'office administrator,' 'account specialist' and 'computer programmer.' Other appropriate job titles may additionally be used.

Employment type field 44 preferably allows the candidate to enter the type of employment in which he or she is interested. Appropriate types of employment include temporary positions, permanent positions, contract positions, and temp-to-perm positions. Other appropriate employment types may also be entered and stored.

Geographic preference field 45 preferably allows the candidate to enter the physical location or locations in which he or she is interested in working. The candidate may select from a group of predetermined locations or may enter his or her own descriptions of geographic preference. Examples of appropriate data to be entered in this field include a domestic region (i.e. Northeastern United States), a city, a state, a zip code or a telephone area code. International locations may be further specified, such as a continent, a foreign country or a foreign city. Other appropriate descriptions of geographic locations may likewise be used.

Company culture field 46 preferably allows the candidate to enter the type of corporate environment in which he or she is interested. The candidate may select data from a group of predetermined terms or may enter his or her own description. Examples of appropriate information for this field includes 'formal,' 'informal,' 'start-up' and the like. Other appropriate descriptions may be used.

Previous job experience field 43 preferably allows the candidate to enter information about previous job positions he or she has held. Examples of appropriate information include a description of duties, a job title, and dates of employment for one or more current or previous positions in which the candidate has been employed. Information from this field may be verified with third parties and the like by the operator of host server 12 upon payment of a fee by either the candidate or an interested employer. Information entered into this field may instead be entered into multiple, separate fields without departing from the spirit and scope of the invention.

Monster Worldwide, Inc. Exhibit 1010 (p.228/1328)

Skill score field 48 preferably stores an evaluation of the candidate based on one or more skill tests completed online or through a third party. Interested employers may be charged a fee to access the information stored in this field. Examples of appropriate skill tests include a determination of the number of words per minute a candidate is able to type, or a determination of the candidates proficiency with a particular software program.

Online training field 49 preferably stores a listing of online training completed by the candidate. Examples of online training that may be offered include training for a particular software program and the like. In one embodiment of the present invention, an interested candidate may pay the operator of host server 12 to complete online job training. Additionally, an employer may pay to view which online training programs a candidate has completed.

Background data field 50 preferably stores background information concerning a candidate. Examples of such background information include a criminal background check, a credit check or a driving history of the candidate. The information may be obtained by the operator of host server 12 from one or more third party verification companies. In one embodiment of the present invention, this background information may be provided to interested employers upon payment of a fee.

Other experience field 51 preferably allows the candidate to enter educational information, military experience and the like. The candidate may enter information into this field from a group of predetermined terms or may enter his or her own description. Other appropriate data may additionally be entered and stored.

Preferred employer field 52 preferably allows the candidate to enter one or more companies for which he or she is interested in working. The candidate may select from a group of predetermined companies (e.g. companies that are registered with the host server 12) or may enter additional companies.

Lock identifying data field 43 preferably allows the candidate indicate that certain employers are to be prevented from receiving the candidate's identifying data (e.g. candidate identifiers and contact information) without the candidate's permission. The candidate may further specify certain companies that are to be always prevented from receiving the identifying data, such as the candidate's current employer.

There may be a further provision of fields which allow candidates to store, for example, preferred salary ranges and the like which a matching job profile should contain.

Monster Worldwide, Inc. Exhibit 1010 (p.229/1328)

Referring now to FIG. 3B, therein is depicted an exemplary format for a job profile database 37 maintained by server 12, wherein titles of individual fields 60-70 are presented. Further or fewer fields may be provided as will be appreciated by one of ordinary skill in the art. In addition, field titles may be altered without impacting the spirit and scope of the present invention. Furthermore, alternative data structures, other than standard database formats, may be employed.

Any of the following fields may be searched by a candidate in accordance with the present invention, and as described below with respect to FIG. 4. Data may be entered into the database 37 by an employer accessing the server 12 via a remote terminal 30a. A pre-formatted web page, which may be similar in appearance to FIG. 3B, may allow the employer to enter appropriate information which is then inserted into the corresponding fields of database 37.

Employer identifier field 60 may contain a name of an employer, such as a corporate name, a trade name and the like.

Industry field 61 preferably contains an indication of the industry in which the company has an available job. Examples of appropriate industries have been provided above in the discussion of field 42.

Type of employment field 62 preferably contains information as to the type of position available, e.g. temporary, permanent, contract or temp-to-perm.

Position field 63 preferably contains a description of the duties that a candidate would have to perform for a particular job listing.

Title field 64 preferably contains the title which accompanies an available job listing.

Salary range field 65 preferably contains a salary for the available job listing being entered.

Location field 66 preferably describes the physical location in which the job is situated, e.g. city and state.

Company culture field 67 preferably contains a description of the employer's working environment, e.g. informal, formal, start-up and the like.

Skill score requirements field 68 preferably contains a range of skill scores which candidates should achieve to be considered for the position, e.g. a candidate must type at least 60 words per minute.

Other experience required field 69 preferably contains a description of other experience which an employer would like a candidate to possess, in addition to those mentioned above.

Monster Worldwide, Inc. Exhibit 1010 (p.230/1328)

Background data required field 70 preferably contains a description of the background data required for a candidate to be considered for a position, e.g. a candidate must not have had any speeding tickets in the past two years.

Referring now to FIG. 4, therein is depicted an exemplary process by which a candidate submits profile data and performs a job search on server 12. The process commences when a candidate optionally enters and stores profile data to server 12 (step 80). The profile data can include the information described above with respect to FIG. 3A and stored in candidate profile database 36.

A candidate next enters one or more database search terms for a position the candidate desires (step 81). The search terms can be based on the candidate's profile data which was stored at step 80 (e.g., the candidate's entry of a preferred employer or a preferred salary range may automatically be incorporated into the search), or the search may include new criteria entered by the candidate. Server 12 is preferably programmed to accept the search data and apply it to the job profile data stored in the job profile database 37.

The server 12 then presents the candidate with results of the database search that was requested (step 82). All positions which have any matching data can be presented. Additionally, any matching job profiles may be ranked according to the percentage of search terms that have been matched to the candidate's search request. Other methods of presenting search results may likewise be used.

The candidate can then indicates that he or she is interested in a particular job listing that has been provided with the search results (step 83). This may be accomplished, for example, by providing a location on the web page, such as a virtual button or checkbox, which the candidate could activate to indicate interest in the job listing and even apply for the job online. Upon selecting the listing, the employer is notified that a candidate has indicated interest in the available job and the employer receives at least a portion of the candidate profile. Preferably, identifying data corresponding to the candidate is initially withheld (step 84).

After reviewing the received profile data, the employer may choose to unlock the candidate's identity (step 85). This may be accomplished, for example, by charging the employer a fee to be paid to the operator of the web site to receive the candidate's identifying data, such as the data stored for the candidate in the candidate identifier field 40 and the contact information field 41 of the candidate

Monster Worldwide, Inc. Exhibit 1010 (p.231/1328)

profile database 36. After payment of the fee and after receiving the identification data, the employer may process the candidate through that company's normal hiring process (step 95).

Referring now to FIG. 4, therein is depicted an exemplary process by which an employer may submit job profile data and perform a search of acceptable candidates for a job position on server 12. The process commences at step 90 where an employer enters job profile data for an available job opening. The data may be stored in job profile database 37. The employer may can then conduct a search for possible candidates for a job position by entering search criteria at the web site hosted by server 12 (step 91). The search criteria may incorporate some or all of the data entered above at step 90. The server then compares the entered search criteria to the candidate profiles stored in candidate profile database 36.

The server next lists candidates who match the entered search criteria (step 92). All candidates with matching search terms may be listed. The list of matching candidates may be sorted according to the percentage of search terms that match each candidate. Furthermore, identification and contact data corresponding to each candidate may be withheld, while other profile data stored in database 36 is presented for review by the employer.

The employer may then select those candidates for which the employer would like to receive identification and contact data. The employer may then pay a fee to unlock the identification and contact data (step 94). The fee may correspond to the number of candidates in which the employer is interested. If a candidate whose data matches the employer's search terms has designated that the employer is not to receive identification and/or contact data, that data may be withheld from the employer. In such case, a fee may not be charged for the employer's request to unlock that candidate's identification and contact data. The employer search process concludes at step 95, discussed previously above.

Although the invention has been described in detail in the foregoing embodiments, it is to be understood that they have been provided for purposes of illustration only and that other variations both in form and detail can be made thereupon by those skilled in the art without departing from the spirit and scope of the invention, which is defined solely by the appended claims.

Monster Worldwide, Inc. Exhibit 1010 (p.232/1328)

We claim:

1. A method for matching candidates to available job openings, comprising:
   a. storing candidate profile data corresponding to a plurality of candidates, the candidate profile data including identification data corresponding to each candidate;
   b. receiving a search request from an employer to be applied to the candidate profile data;
   c. displaying a search result to the employer, the search result including a listing of at least one matched candidate having candidate profile data that corresponds to a portion of the search request and excluding identification data for each matched candidate;
   d. receiving, from the employer, a request to receive identification data for at least one matched candidate; and
   e. charging a fee to the employer based on the request to receive identification data.

2. The method of claim 1, further comprising the steps of
   a. comparing each candidate profile to the search request;
   b. determining a match when at least a portion of the candidate profile satisfies the search request; and
   c. compiling the search result from portions of matching candidate profile.

3. The method of claim 2, further comprising the step of determining the percentage of satisfaction of the match between the candidate profile and the search request.

4. The method of claim 2, wherein a candidate profile includes an exclusion list of one or more employers, the method further comprising the steps of:
   a. determining whether the employer is indicated on the exclusion list; and
   b. excluding all portions of the candidate profile from the search result upon determination that the employer is indicated on the exclusion list.

Monster Worldwide, Inc. Exhibit 1010 (p.233/1328)

5. The method of claim 1, further comprising the steps of:

a. providing the candidate with a skills test;

b. receiving test results from the candidate;

c. generating a ranking based on the test results; and

d. associating at least one of the test results and the ranking with the candidate profile corresponding to the candidate.

6. The method of claim 5, further comprising the steps of:

a. receiving from the employer, a request to receive the ranking for at least one matched candidate;

b. charging the employer a fee based on the request to receive the ranking; and

c. providing the ranking of the matched candidates to the employer.

7. The method of claim 1, further comprising the steps of:

a. receiving a request from a candidate for training;

b. providing the requested training to the candidate; and

c. indicating the result of the training in the candidate profile corresponding to the candidate.

8. The method of claim 1, further comprising the steps of:

a. receiving a request from the employer for background check on a candidate; and

b. providing the employer with the background check on the candidate.

9. The method of claim 1, further comprising the steps of:

a. receiving a resume in electronic format from a candidate;

b. parsing the resume to identify information segments in the resume; and

c. generating a candidate profile by placing the identified segments in the corresponding profile format.

Monster Worldwide, Inc. Exhibit 1010 (p.234/1328)

10. A method for matching candidates to available job openings, using a compilation of candidate profiles, comprising:

a. receiving from an employer a search request to be applied to the compilation of candidate profiles;

b. determining at least one matched candidate that corresponds to a candidate profile satisfying at least a portion of the search request;

c. providing to the employer at least a portion of the candidate profile corresponding to the at least one matched candidate,

d. receiving from the employer a request to receive identification data for at least one matched candidate; and

e. charging a fee to the employer based on the request to receive identification data; and

f. providing the employer with the requested identification data associated with the candidate profile corresponding to the at least one matched candidate.

11. The method of claim 10, wherein the step of providing at least a portion of the candidate profile further comprising the step of excluding identification data from the data provided.

12. A method for matching candidates to available job openings, using a compilation of candidate profiles, wherein the candidate profiles include identification data, comprising:

a. locking the identification data associated with each candidate profile;

b. upon request for identification data from an employer, unlocking the identification data associated with the candidate profile; and

c. charging a fee to the employer based on the request for identification data.

13. The method of claim 12, further comprising the steps of:

a. upon request for candidate profile from an employer, determining at least one matched candidate that corresponds to a candidate profile satisfying at least a portion of the request; and

b. providing to the employer access to the candidate profile corresponding to the at least one matched candidate.

Monster Worldwide, Inc. Exhibit 1010 (p.235/1328)

14. A method for matching candidates to available job openings, comprising:

a. storing job profile data corresponding to a plurality of available job positions;

b. receiving a search request from a candidate to be applied to the job profile data;

c. displaying a search result to the candidate including a listing of at least one job opening that corresponds to a portion of the search request;

d. receiving, from the candidate, an indication of interest in at least one of the listed job openings;

e. transmitting candidate profile data corresponding to the candidate to an employer posting the indicated job listing;

f. receiving, from the employer, a request to receive identification data for the candidate; and

g. charging a fee to the employer based on the request to receive identification data.

15. The method of claim 14, further comprising the steps of

a. comparing each job profile to the search request;

b. determining a match when at least a portion of the job profile satisfies the search request; and

c. compiling the search result from portions of matching job profile.

16. The method of claim 15, further comprising the step of determining the percentage of satisfaction of the match between the job profile and the search request.

17. The method of claim 14, further comprising the steps of:

a. providing the candidate with a skills test;

b. receiving test results from the candidate;

c. generating a ranking based on the test results; and

d. associating at least one of the test results and the ranking with the candidate profile corresponding to the candidate.

Monster Worldwide, Inc. Exhibit 1010 (p.236/1328)

18. The method of claim 17, further comprising the steps of:

a. receiving from the employer, a request to receive the ranking the candidate;

b. charging the employer a fee based on the request to receive the ranking; and

c. providing to the employer the ranking associated with the candidate profile corresponding to the candidate.

19. The method of claim 14, further comprising the steps of:

a. receiving a request from a candidate for training;

b. providing the requested training to the candidate; and

c. indicating the results of the training in the candidate profile corresponding to the candidate.

20. The method of claim 14, further comprising the steps of:

a. receiving a request from the employer for background check on a candidate; and

b. providing the employer with the background check on the candidate.

21. A method for matching candidates to available job openings, using a compilation of job profiles, comprising:

a. receiving from a candidate a criteria to be applied to the compilation of job profiles;

b. determining at least one matched job opening that corresponds to a job profile satisfying at least a portion of the criteria;

c. providing to the candidate at least a portion of the job profile corresponding to the at least one matched job opening,

d. receiving from the candidate an indication for at least one matched job opening;

e. providing to an employer at least a portion of a candidate profile wherein the employer is associated with the matched job opening and the candidate profile is associated with the candidate;

f. receiving from the employer a request to receive identification data for the received candidate profile; and

Monster Worldwide, Inc. Exhibit 1010 (p.237/1328)

g. charging a fee to the employer based on the request to receive the identification data; and

h. providing the employer with the requested identification data associated with the candidate profile.

22. The method of claim 21, wherein the step of providing at least a portion of the candidate profile further comprising the step of excluding identification data from the profile provided.

Monster Worldwide, Inc. Exhibit 1010 (p.238/1328)

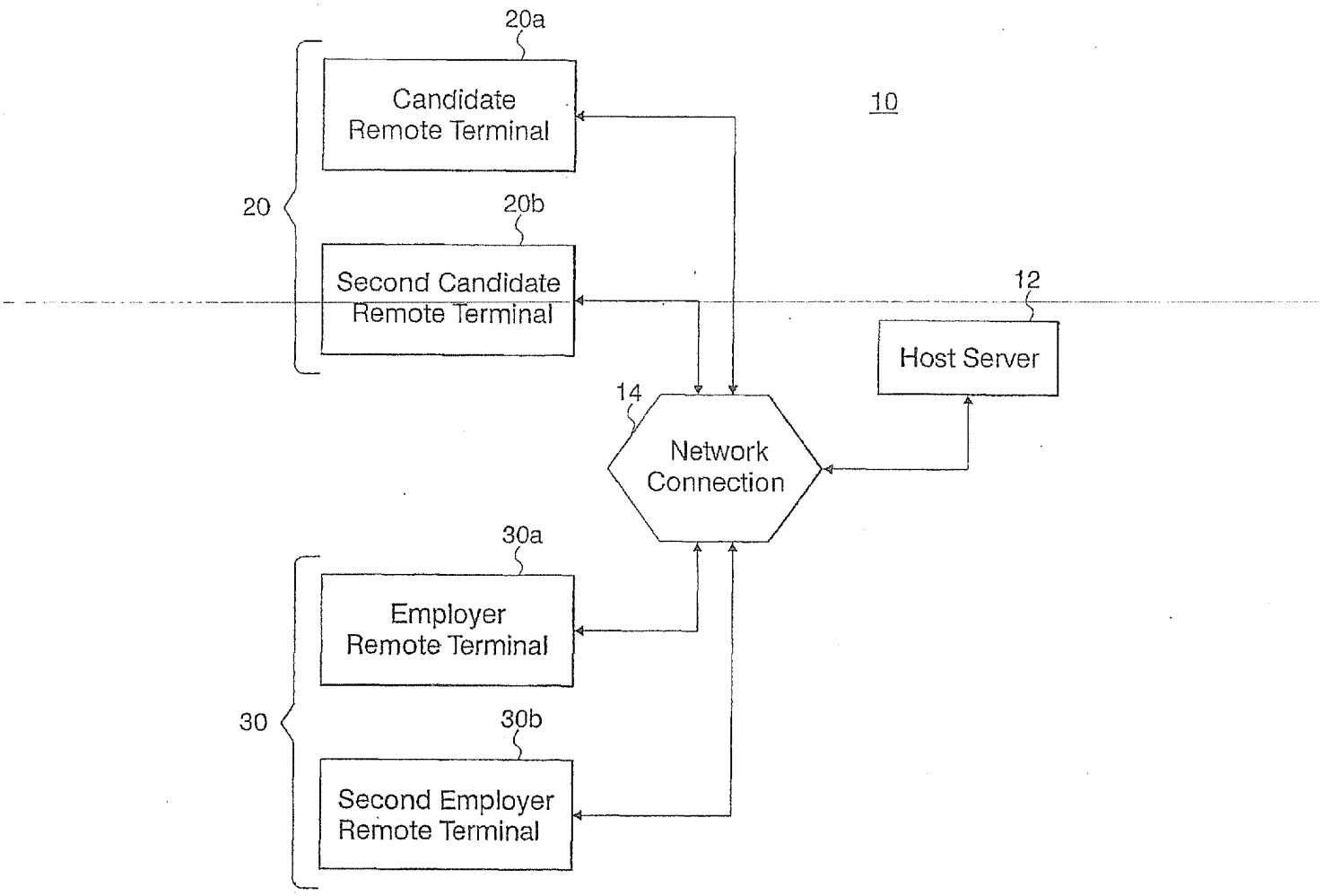
20a
Candidate Remote Terminal
10
20
20b
Second Candidate Remote Terminal
12
Host Server
14
Network Connection
30a
Employer Remote Terminal
30
30b
Second Employer Remote Terminal

FIG. 1

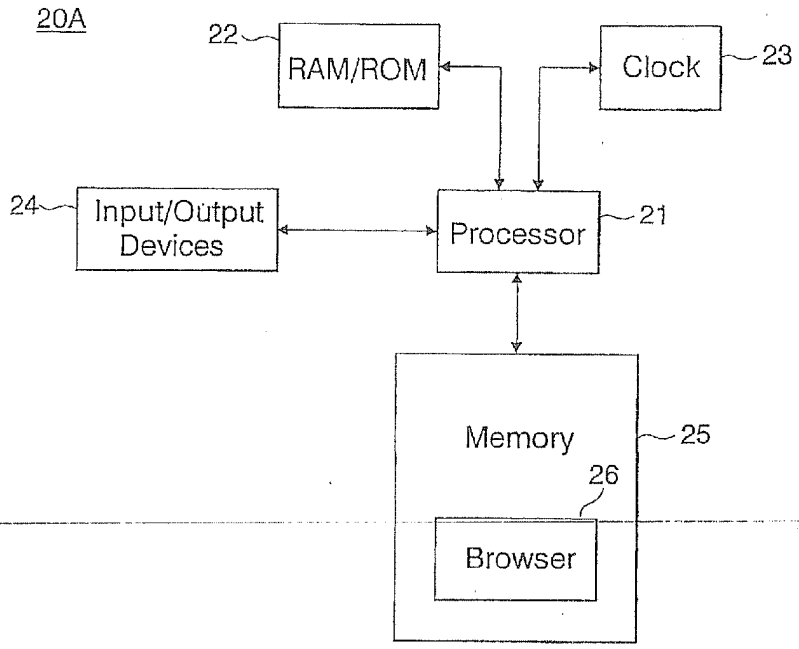

Figure 2A

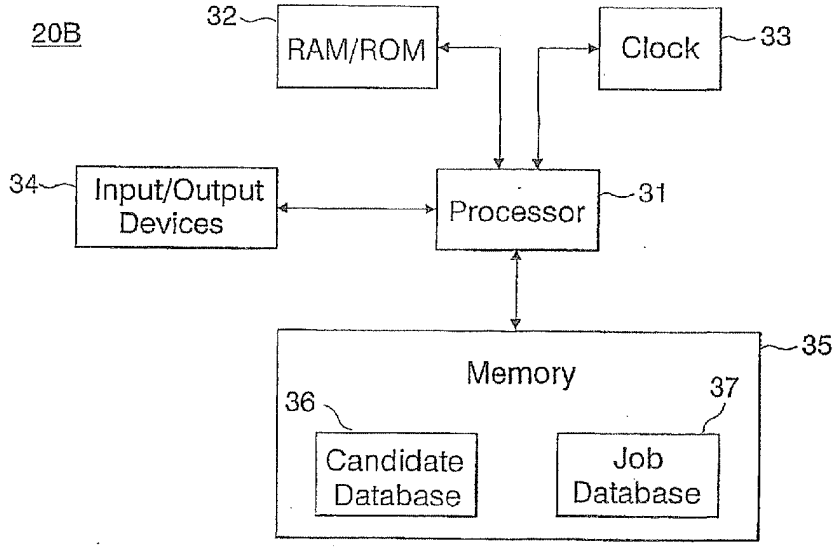

Figure 2B

Monster Worldwide, Inc. Exhibit 1010 (p.240/1328)

Candidate Identifier	40	
Contact Information	41	
Industry Sought	42	
Title Sought	43	
Employment Type	44	
Geographic Preference	45	
Company Culture Sought	46	
Previous Job Experience	47	
Skill Score	48	
Online Training Completed	49	
Background Data	50	
Other Experience	51	
Preferred Employer	52	
Lock Identifying Data	53	

Figure 3A

Monster Worldwide, Inc. Exhibit 1010 (p.241/1328)

Employer Identifier	60	
Industry	61	
Type of Employment	62	
Position	63	
Title	64	
Salary Range	65	
Location	66	
Company Culture	67	
Skill Score Requirements	68	
Other Experience Required	69	
Background Data Required	70	

Figure 3B

Monster Worldwide, Inc. Exhibit 1010 (p.242/1328)

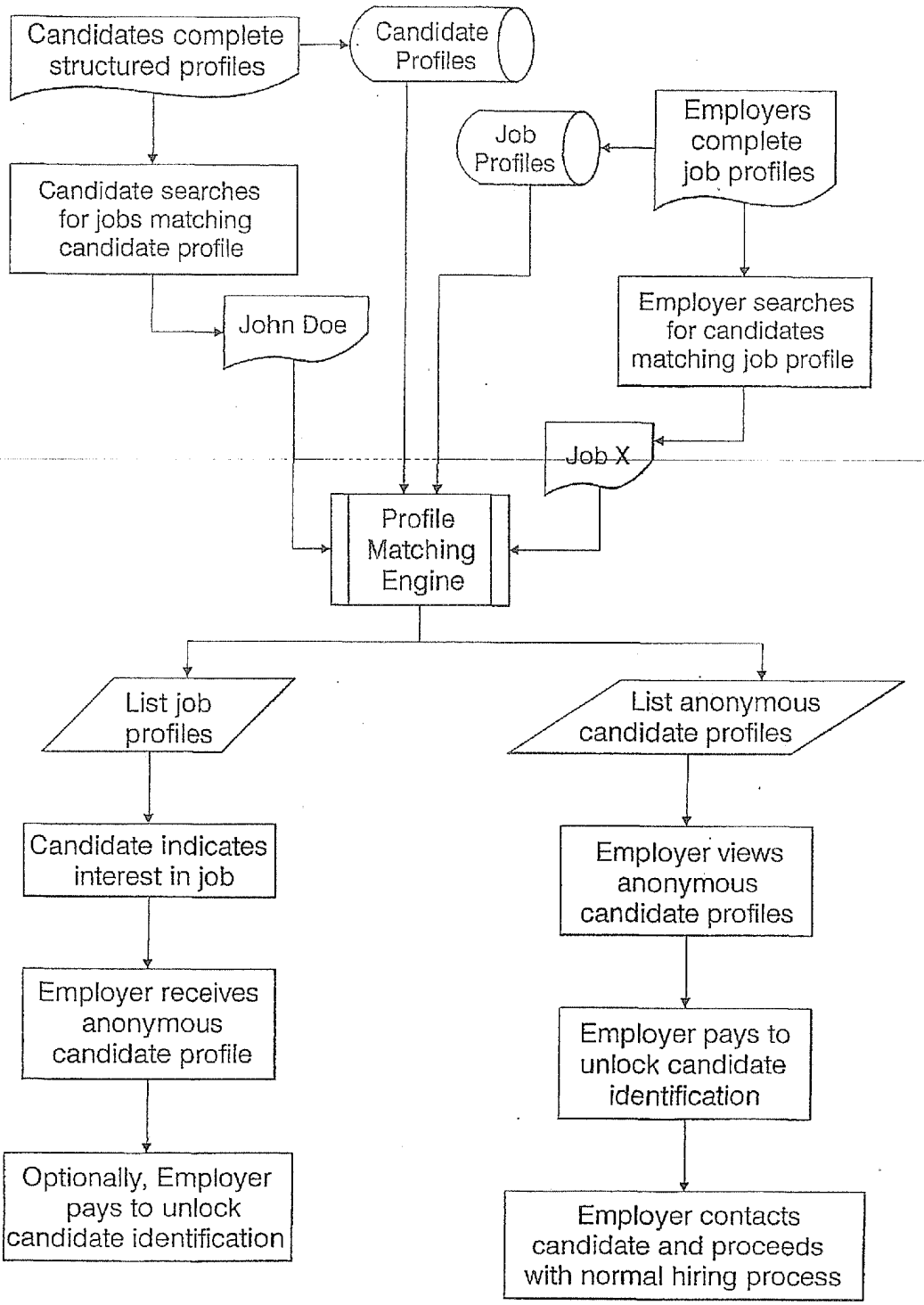
Candidates complete structured profiles
Candidate Profiles
Job Profiles
Employers complete job profiles
Candidate searches for jobs matching candidate profile
John Doe
Employer searches for candidates matching job profile
Job X
Profile Matching Engine
List job profiles
List anonymous candidate profiles
Candidate indicates interest in job
Employer views anonymous candidate profiles
Employer receives anonymous candidate profile
Employer pays to unlock candidate identification
Optionally, Employer pays to unlock candidate identification
Employer contacts candidate and proceeds with normal hiring process

Figure 4

PATENT COOPERATION TREATY

PCT

DECLARATION OF NON-ESTABLISHMENT OF INTERNATIONAL SEARCH REPORT

(PCT Article 17(2)(a), Rules 13ter.1(c) and Rule 39)

Applicant's or agent's file reference	IMPORTANT DECLARATION	Date of mailing *(day/month/year)*
6565/2G622WO		10/09/2001
International application No.	International filing date *(day/month/year)*	(Earliest) Priority date *(day/month/year)*
PCT/US 01/ 12910	20/04/2001	21/04/2000
International Patent Classification (IPC) or both national classification and IPC	G06F17/60	
Applicant		
ROBERT HALF INTERNATIONAL INC.		

This International Searching Authority hereby declares, according to Article 17(2)(a), that **no international search report will be established** on the International application for the reasons indicated below

1. [X] *The subject matter of the international application relates to:*

   a. [ ] scientific theories.

   b. [ ] mathematical theories

   c. [ ] *plant varieties.*

   d. [ ] animal varieties.

   e. [ ] essentially biological processes for the production of plants and animals, other than microbiological processes and the products of such processes.

   f. [X] schemes, rules or methods of doing business.

   g. [ ] schemes, rules or methods of performing purely mental acts.

   h. [ ] schemes, rules or methods of playing games.

   i. [ ] methods for treatment of the human body by surgery or therapy.

   j. [ ] methods for treatment of the animal body by surgery or therapy.

   k. [ ] *diagnostic methods practised on the human or animal body.*

   l. [ ] mere presentations of information.

   m. [ ] computer programs for which this International Searching Authority is not equipped to search prior art.

2. [ ] The failure of the following parts of the international application to comply with prescribed requirements prevents a meaningful search from being carried out:

   [ ] *the description* [ ] *the claims* [ ] the drawings

3. [ ] The failure of the nucleotide and/or amino acid sequence listing to comply with the standard provided for in Annex C of the Administrative Instructions prevents a meaningful search from being carried out:

   [ ] the written form has not been furnished or does not comply with the standard.

   [ ] the computer readable form has not been furnished or does not comply with the standard.

4. Further comments:

Name and mailing address of the International Searching Authority	Authorized officer
European Patent Office, P.B. 5818 Patentlaan 2 NL-2280 HV Rijswijk Tel. (+31-70) 340-2040, Tx. 31 651 epo nl, Fax: (+31-70) 340-3016	Lucia Van Pinxteren

Form PCT/ISA/203 (July 1998)

FURTHER INFORMATION CONTINUED FROM PCT/ISA/ 203

The subject-matter claimed in claims 1-22 falls under the provisions of Article 17(2)(a)(i) and Rule 39.1(iii) PCT, such subject-matter relating to a method of doing business.

The applicant's attention is drawn to the fact that claims relating to inventions in respect of which no international search report has been established need not be the subject of an international preliminary examination (Rule 66.1(e) PCT). The applicant is advised that the EPO policy when acting as an International Preliminary Examining Authority is normally not to carry out a preliminary examination on matter which has not been searched. This is the case irrespective of whether or not the claims are amended following receipt of the search report or during any Chapter II procedure. If the application proceeds into the regional phase before the EPO, the applicant is reminded that a search may be carried out during examination before the EPO (see EPO Guideline C-VI, 8.5), should the problems which led to the Article 17(2) declaration be overcome.

US 20010042038A1

(19) United States
(12) Patent Application Publication (10) Pub. No.: US 2001/0042038 A1
Phatak (43) Pub. Date: Nov. 15, 2001

(54) METHOD AND SYSTEM FOR CONDUCTING AN AUCTION FOR RESOURCES

(76) Inventor: **Anirudha Phatak**, Rochester Hills, MI (US)

Correspondence Address:
PERKINS COIE LLP
PATENT-SEA
P.O. BOX 1247
SEATTLE, WA 98111-1247 (US)

(21) Appl. No.: **09/738,169**

(22) Filed: **Dec. 14, 2000**

Related U.S. Application Data

(63) Non-provisional of provisional application No. 60/170,836, filed on Dec. 14, 1999.

Publication Classification

(51) **Int. Cl.**[7] **G06F 17/60**
(52) **U.S. Cl.** **705/37**

(57) **ABSTRACT**

A method and system for selecting a resource. The resource system receives resource requirements that indicate target attributes of a target resource that is desired. The resource system receives offers to provide candidate resources to fill the resource requirements in an auction environment. Each candidate resource has candidate attributes that specify the characteristics of the candidate resource. The resource system generates a match rating for each candidate resource that indicates how closely the candidate attributes match the target attributes. The resource system then uses the match ratings to select a candidate resource whose candidate attributes best match the target attributes.

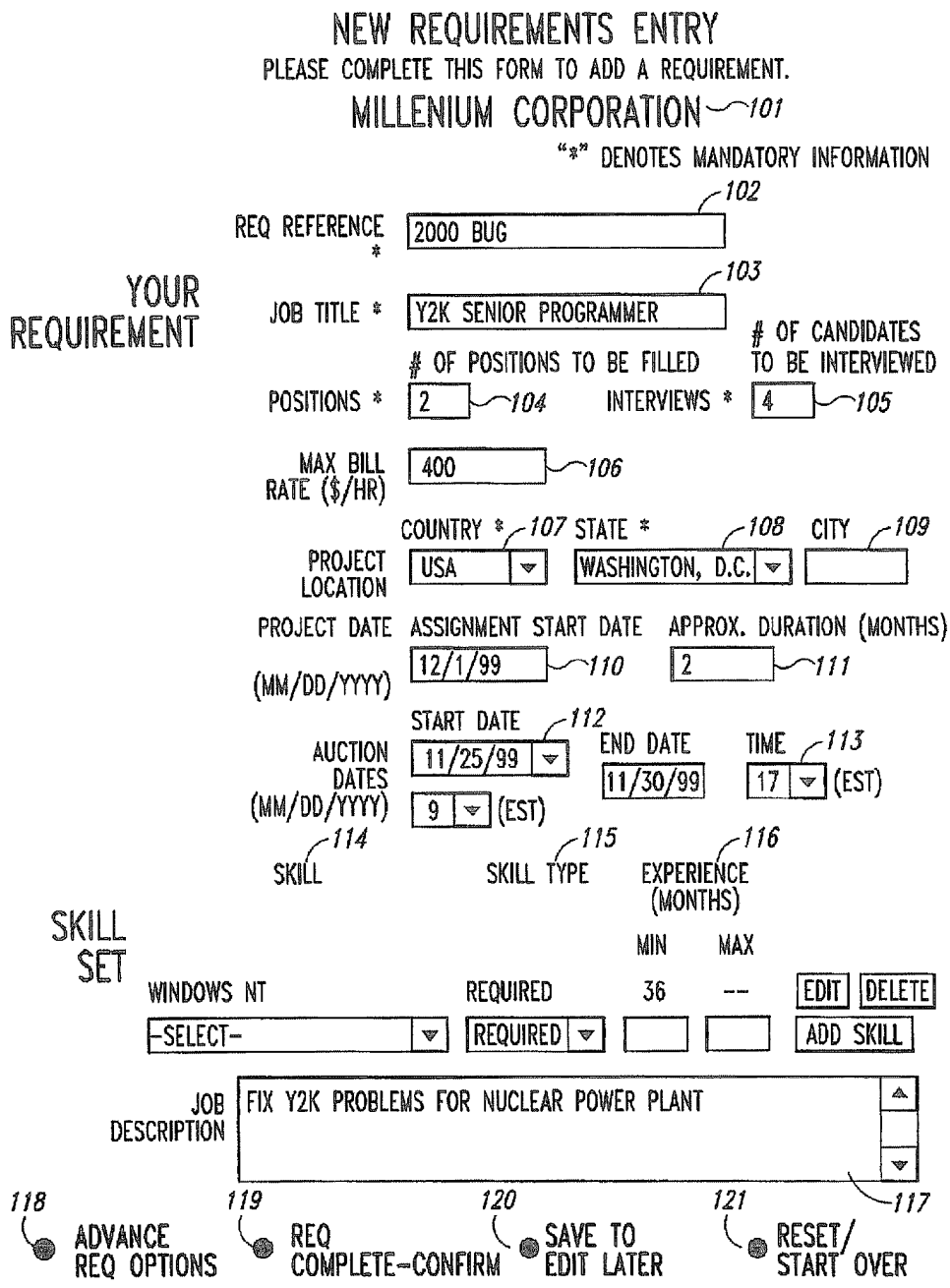
NEW REQUIREMENTS ENTRY
PLEASE COMPLETE THIS FORM TO ADD A REQUIREMENT.
MILLENIUM CORPORATION 101
"*" DENOTES MANDATORY INFORMATION
YOUR REQUIREMENT
REQ REFERENCE * 2000 BUG 102
JOB TITLE * Y2K SENIOR PROGRAMMER 103
OF POSITIONS TO BE FILLED
POSITIONS * 2 104
OF CANDIDATES TO BE INTERVIEWED
INTERVIEWS * 4 105
MAX BILL RATE ($/HR) 400 106
COUNTRY * 107 STATE * 108 CITY 109
PROJECT LOCATION USA WASHINGTON, D.C.
PROJECT DATE (MM/DD/YYYY)
ASSIGNMENT START DATE 12/1/99 110
APPROX. DURATION (MONTHS) 2 111
AUCTION DATES (MM/DD/YYYY)
START DATE 11/25/99 112
9 (EST)
END DATE 11/30/99
TIME 17 113 (EST)
SKILL 114
SKILL TYPE 115
EXPERIENCE (MONTHS) 116
SKILL SET
MIN MAX
WINDOWS NT REQUIRED 36 -- EDIT DELETE
-SELECT- REQUIRED ADD SKILL
JOB DESCRIPTION FIX Y2K PROBLEMS FOR NUCLEAR POWER PLANT 117
118 ADVANCE REQ OPTIONS
119 REQ COMPLETE-CONFIRM
120 SAVE TO EDIT LATER
121 RESET/ START OVER

Fig. 1

ADVANCE OPTIONS

PLEASE COMPLETE THIS FORM TO SPECIFY YOUR ADVANCE OPTIONS.

MILLENIUM CORPORATION ~201

ABOUT REQUIREMENT

REQ REFERENCE 2000BUG ~202

JOB TITLE Y2K SENIOR PROGRAMMER ~203

SKILL SET

SKILL (206)	EXPERIENCE (MONTHS) (205) MIN	MAX	ADDITIONAL EXPERIENCE (204)
WINDOWS NT	36	--	NOT PREFERRED

CONSULTANTS WITH LESS THAN [50] (207) % OF THE MINIMUM EXPERIENCE SHOULD NOT BE SHORTLISTED.

CONSULTANTS WITH MORE THAN [50] (208) % OF THE MAXIMUM EXPERIENCE SHOULD NOT BE SHORTLISTED.

PREMIUM PLACED [10] (209) % ON MAXIMUM EXPERIENCE OVER MINIMUM EXPERIENCE.

CONSULTANTS WITH LESS THAN [80] (210) % MATCH WITH REQUIRED SKILLS SHOULD NOT BE SHORTLISTED.

CONSULTANTS MUST BE AVAILABLE FOR AT LEAST [1] (211) DAYS AFTER AUCTION CLOSE FOR INTERVIEW AND CONTRACT FINALIZATION.

WEIGHTAGE FOR BID EVALUATION FACTOR

EVALUATION FACTOR	IMPORTANCE ON SCALE FROM 0 - 10	RELATIVE IMPORTANCE IN %
PRICE	[7] ~212	25.9259259259
SKILL FIT	[5] ~213	18.5185185185
AVAILABILITY	[10] ~214	37.037037037
RESERVATION	[5] ~215	18.5185185185

216 ~ COMPUTE

PRICE - BILL RATE ($ / HR).
SKILL FIT - DEGREE OF FIT OF CONSULTANT'S EXPERIENCE AGAINST REQUIREMENT EXPERIENCE.
AVAILABILITY - CONSULTANT'S AVAILABILITY RELATIVE TO ASSIGNMENT START DATE.
RESERVATION PERIOD - NUMBER OF CALENDAR DAYS A MEMBER AGREES TO HOLD A CANDIDATE UNTIL CONFIRMATION FROM CLIENT.

ADD ANOTHER REQUIREMENT FOR SAME REFERENCE (217) REQ COMPLETE CONFIRM (218) RESET (219)

Fig. 2

YOUR REQUIREMENTS LISTING

COMPLETE LISTING OF REQUIREMENTS YOU HAVE ENTERED.

MILLENIUM CORPORATION ~301

CLIENT REQS : ALL

LIVE AUCTION | ALL | NOT STARTED | INCOMPLETE | CLOSED ~302

REQ REFERENCE	JOB TITLE	SKILLS	ASSIGNMENT START DATE	# OF POS	REQ STATUS	AUCTION CLOSE DATE	# OF BIDS	LOWEST BID ($/HR)
POST Y2K PROGRAMMER	PROGRAMMER	WINDOWS API, WINDOWS NT	01/01/2000	1	NOT STARTED	11/29/1999	0	
2000BUG	Y2K SENIOR PROGRAMMER	WINDOWS NT	12/01/1999	2	LIVE AUCTION	11/30/1999	2	100

~303 ~304 ~305

Fig. 3

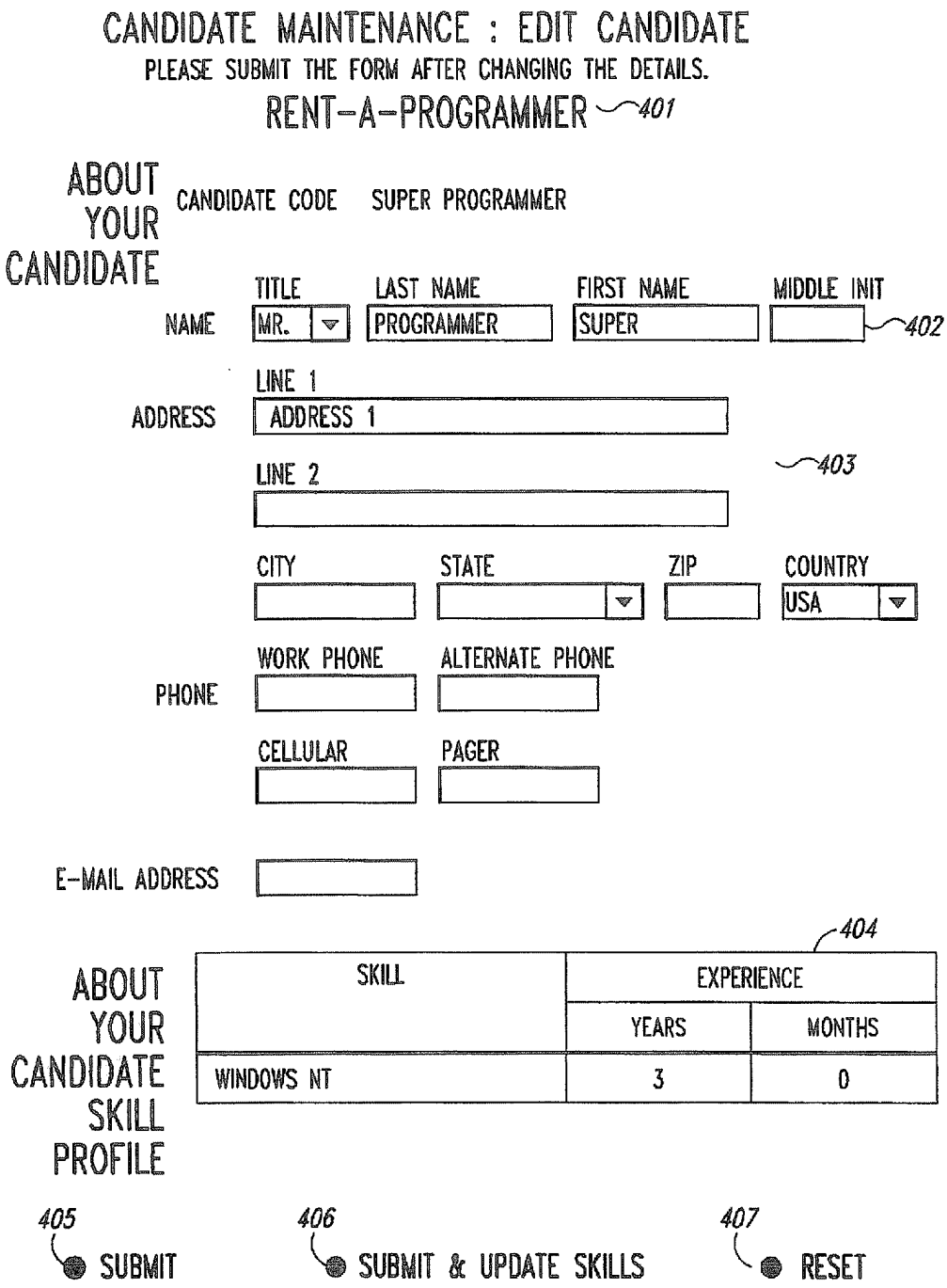
CANDIDATE MAINTENANCE : EDIT CANDIDATE
PLEASE SUBMIT THE FORM AFTER CHANGING THE DETAILS.
RENT-A-PROGRAMMER
401
ABOUT YOUR CANDIDATE
CANDIDATE CODE SUPER PROGRAMMER
TITLE
LAST NAME
FIRST NAME
MIDDLE INIT
NAME
MR.
PROGRAMMER
SUPER
402
LINE 1
ADDRESS
ADDRESS 1
LINE 2
403
CITY
STATE
ZIP
COUNTRY
USA
WORK PHONE
ALTERNATE PHONE
PHONE
CELLULAR
PAGER
E-MAIL ADDRESS
404
ABOUT YOUR CANDIDATE SKILL PROFILE
SKILL
EXPERIENCE
YEARS
MONTHS
WINDOWS NT
3
0
405
SUBMIT
406
SUBMIT & UPDATE SKILLS
407
RESET

Fig. 4

OPEN REQUIREMENTS LISTING

COMPLETE LISTING OF REQUIREMENTS WHICH ARE OPEN.

RENT-A-PROGRAMMER ~501

REQUIREMENTS (ALL REQS) | REQUIREMENTS (PROFILE REQS) ~502

SORT BY : PROJECT LOCATION ▼ START FROM : ~503 ~504 GO

COUNTRY : -SELECT- ▼ STATE : -SELECT- SKILL : -SELECT-

GUPTA SQL BASE

INTERBASE

REQ REFERENCE	JOB TITLE	# OF POS	SKILLS	PROJECT LOCATION	AUCTION START DATE	AUCTION CLOSE DATE
BA05	DATA ANALYST	1	A/P APPLICATIONS, ACCOUNTING APPLICATIONS, ER DIAGRAMS	ARIZONA	11/26/1999	12/31/1999
00001	SOFTWARE CONSULTANT	1	JAVA	CALIFORNIA	11/22/1999	11/30/1999
BA02	PROGRAMMERS	3	VISUAL C++ COM /DCOM / COM+, SQL SERVER PROGRAMMING	COLORADO	11/18/1999	11/30/1999
2000BUG	Y2K SENIOR PROGRAMMER	2	WINDOWS NT	WASHINGTON, D.C.	11/28/1999	11/30/1999

~505

~506

Fig. 5

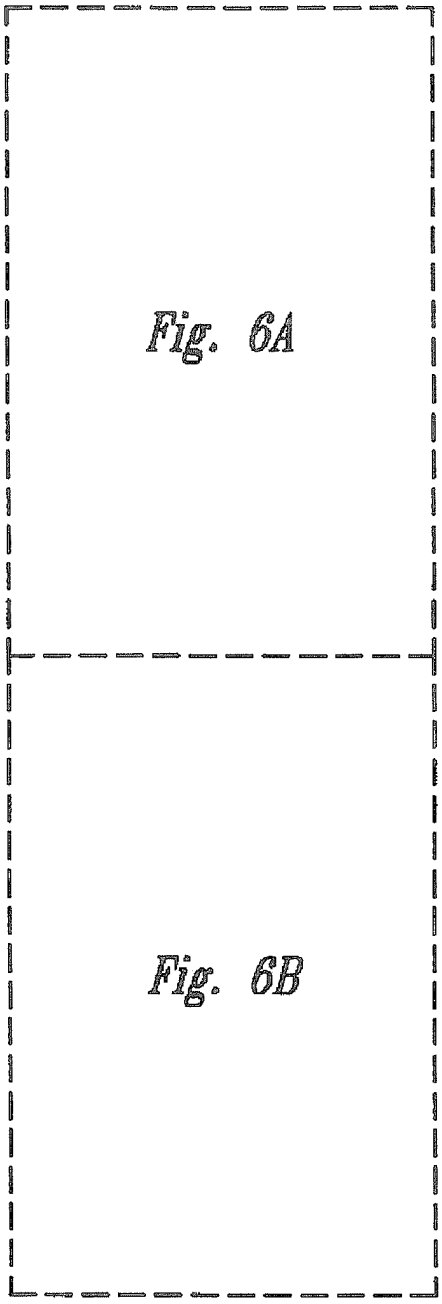

Fig. 6

REQUIREMENT DETAILS

DETAIL OF THIS REQUIREMENT AND THE SHORTLISTED BIDS.

RENT-A-PROGRAMMER ~601

REQ REFERENCE	2000BUG			
JOB TITLE	Y2K SENIOR PROGRAMMER			# OF CANDIDATES TO BE INTERVIEWED
	# OF POSITIONS TO BE FILLED			
POSITIONS	2		INTERVIEWS	4
MAX BILL RATE ($/HR)	400			
	COUNTRY	STATE		CITY
PROJECT LOCATION	USA	WASHINGTON, D.C.		
PROJECT DATE (MM/DD/YYYY)	ASSIGNMENT START DATE	APPROX. DURATION (MONTHS)		
	12/01/1999	2		
AUCTION DATES (MM/DD/YYYY)	START DATE	TIME		
	11/28/1999 (EST)	17:00:00	END DATE	TIME
			11/30/1999	17:00:00 (EST)

602

SKILL SET

SKILL	SKILL TYPE	EXPERIENCE (MONTHS)	
		MIN	MAX
WINDOWS NT	REQUIRED	36	--

JOB DESCRIPTION FIX Y2K PROBLEMS FOR NUCLEAR POWER PLANT

CLIENT SPECIFICATIONS

BILL STEP RATE ($/HR) : 00.5
CONSULTANTS WITH LESS THAN 50% OF THE MINIMUM REQUIRED EXPERIENCE WILL NOT BE SHORTLISTED.
CONSULTANTS WITH LESS THAN 80% MATCH WITH REQUIRED SKILLS WILL NOT BE SHORTLISTED.
CONSULTANTS AVAILABILITY RELATIVE TO ASSIGNMENT START DATE : 37.037037037%.
CONSULTANT MUST BE AVAILABLE FOR 1 DAYS AFTER AUCTION CLOSE FOR INTERVIEW AND SELECTION.

603

SUBMIT A BID

604

ENTER THE CODE OF THE CANDIDATE YOU WISH TO SUBMIT.
IF THE CANDIDATE CODE IS NON-EXISTANT IN THE SYSTEM, YOU WILL BE PROMPTED TO ENTER A NEW CANDIDATE TO BID.

Fig. 6A

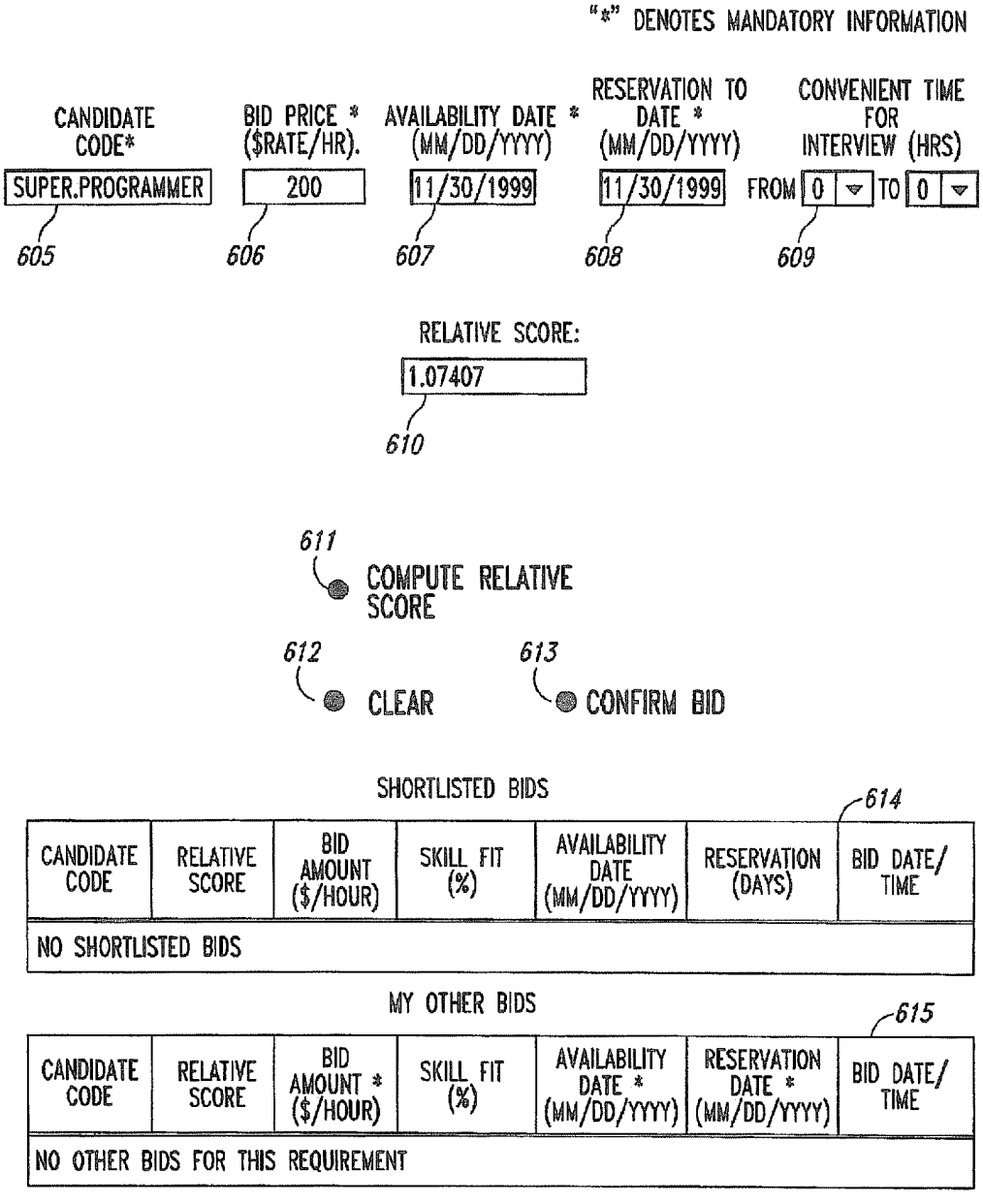
"*" DENOTES MANDATORY INFORMATION
CANDIDATE CODE*
BID PRICE * ($RATE/HR).
AVAILABILITY DATE * (MM/DD/YYYY)
RESERVATION TO DATE * (MM/DD/YYYY)
CONVENIENT TIME FOR INTERVIEW (HRS)
SUPER.PROGRAMMER
200
11/30/1999
11/30/1999
FROM 0 TO 0
605
606
607
608
609
RELATIVE SCORE:
1.07407
610
611
COMPUTE RELATIVE SCORE
612
CLEAR
613
CONFIRM BID
SHORTLISTED BIDS
614
CANDIDATE CODE
RELATIVE SCORE
BID AMOUNT ($/HOUR)
SKILL FIT (%)
AVAILABILITY DATE (MM/DD/YYYY)
RESERVATION (DAYS)
BID DATE/ TIME
NO SHORTLISTED BIDS
MY OTHER BIDS
615
CANDIDATE CODE
RELATIVE SCORE
BID AMOUNT * ($/HOUR)
SKILL FIT (%)
AVAILABILITY DATE * (MM/DD/YYYY)
RESERVATION DATE * (MM/DD/YYYY)
BID DATE/ TIME
NO OTHER BIDS FOR THIS REQUIREMENT

Fig. 6B

YOUR BIDS LISTING

COMPLETE LISTING OF YOUR BIDS.

RENT-A-PROGRAMMER ~701

MY BIDS : LIVE AUCTION

BID OPTION : ALL | CLOSED | LIVE AUCTION ~702

SORT BY : BID ID ~703 START FROM : ~704 GO

~705

BID ID	CANDIDATE CODE	CANDIDATE NAME	REQ REFERENCE	JOB TITLE	SKILLS	# OF POS	AUCTION END DATE	BID STATUS
144	SUPER. PROGRAMMER	S PROGRAMMER	2000BUG	Y2K SENIOR PROGRAMMER	WINDOWS NT	2	11/30/1999	SHORTLISTED
145	DUMB. PROGRAMMER	D PROGRAMMER	2000BUG	Y2K SENIOR PROGRAMMER	WINDOWS NT	2	11/30/1999	SHORTLISTED

Fig. 7

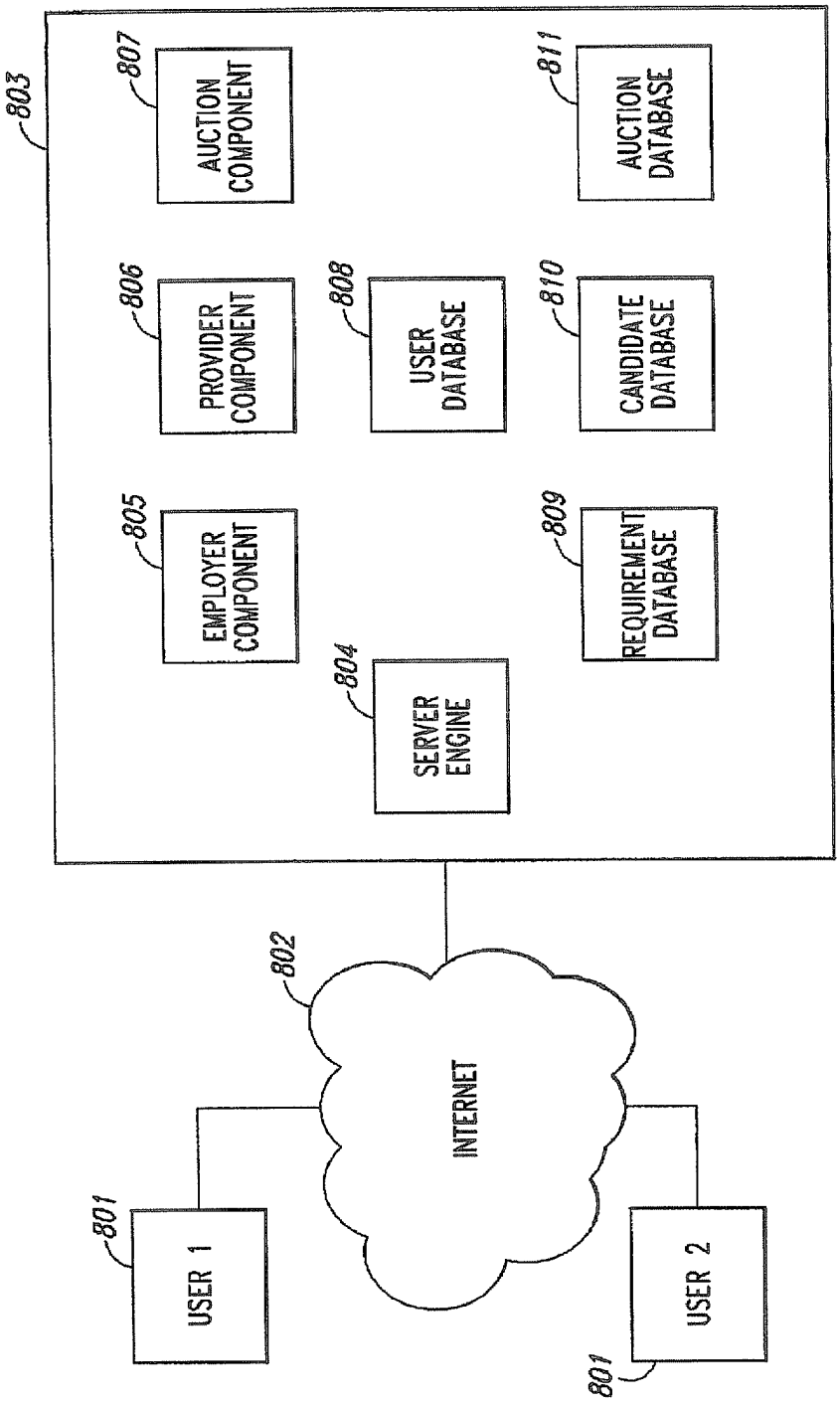
803
807
AUCTION COMPONENT
811
AUCTION DATABASE
806
PROVIDER COMPONENT
808
USER DATABASE
810
CANDIDATE DATABASE
805
EMPLOYER COMPONENT
809
REQUIREMENT DATABASE
804
SERVER ENGINE
802
INTERNET
801
USER 1
801
USER 2

Fig. 8

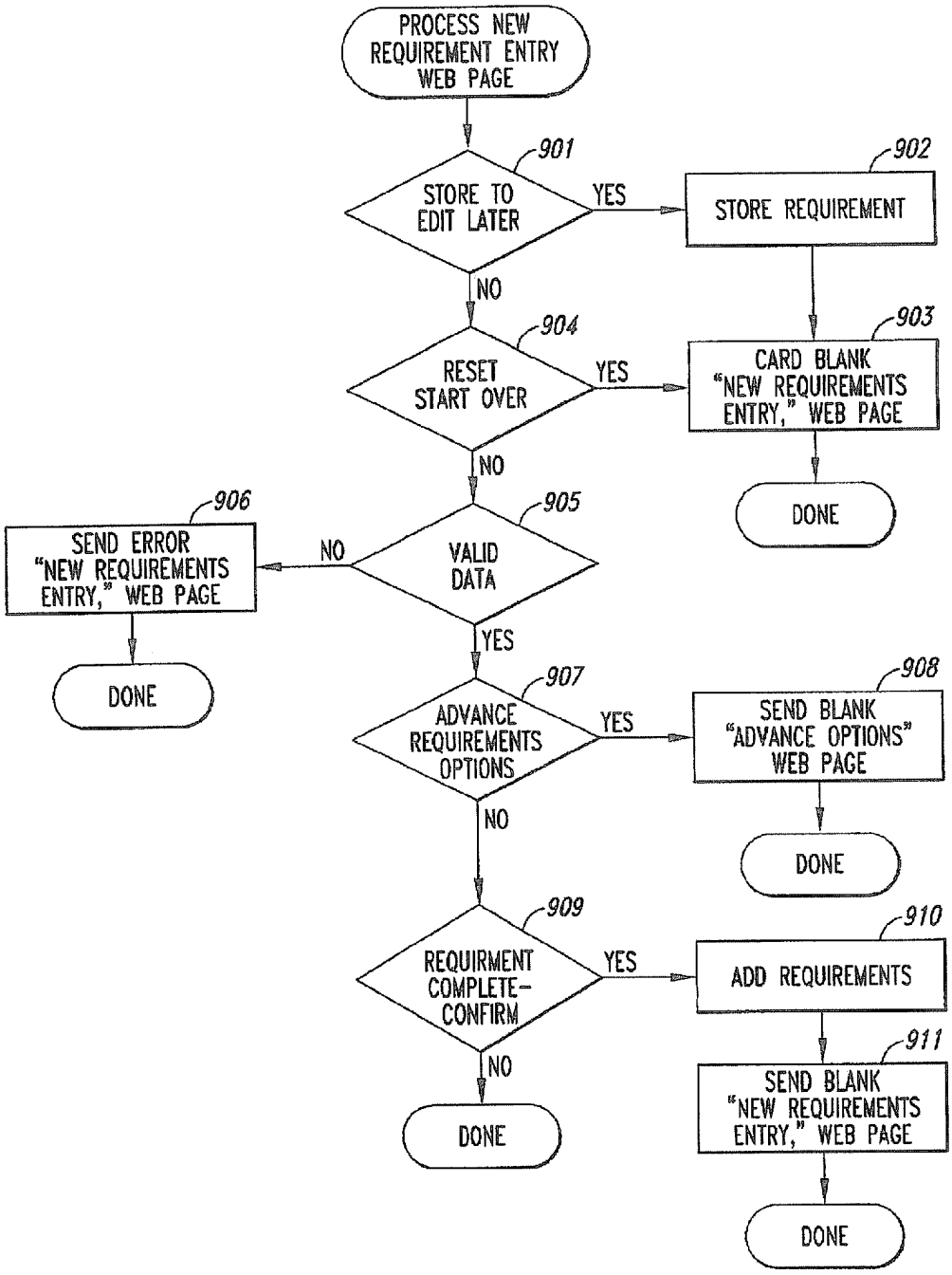
PROCESS NEW REQUIREMENT ENTRY WEB PAGE
901
STORE TO EDIT LATER
YES
902
STORE REQUIREMENT
NO
904
RESET START OVER
YES
903
CARD BLANK "NEW REQUIREMENTS ENTRY," WEB PAGE
DONE
NO
906
SEND ERROR "NEW REQUIREMENTS ENTRY," WEB PAGE
NO
905
VALID DATA
YES
DONE
907
ADVANCE REQUIREMENTS OPTIONS
YES
908
SEND BLANK "ADVANCE OPTIONS" WEB PAGE
NO
DONE
909
REQUIRMENT COMPLETE-CONFIRM
YES
910
ADD REQUIREMENTS
NO
911
SEND BLANK "NEW REQUIREMENTS ENTRY," WEB PAGE
DONE
DONE

Fig. 9

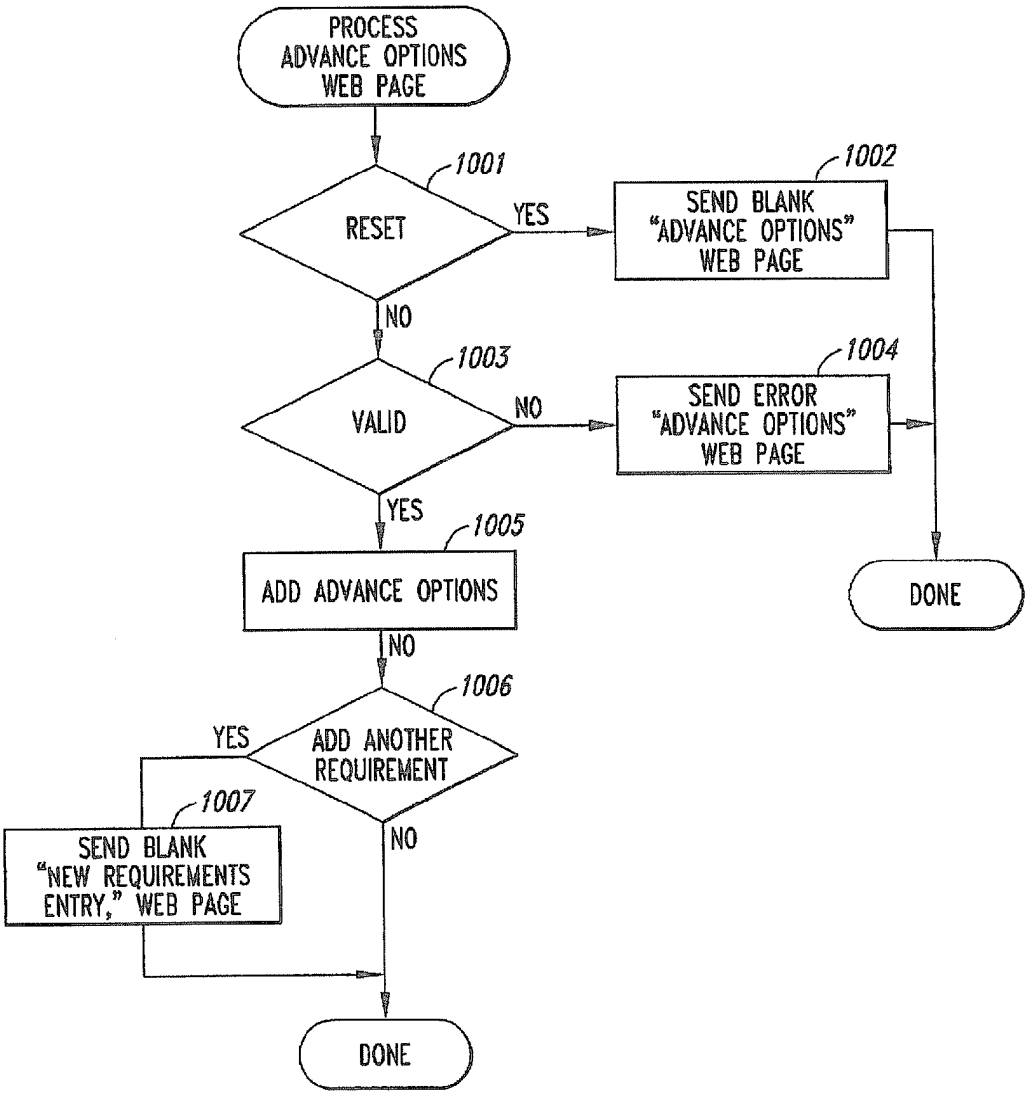
PROCESS ADVANCE OPTIONS WEB PAGE
1001
RESET
YES
1002
SEND BLANK "ADVANCE OPTIONS" WEB PAGE
NO
1003
VALID
NO
1004
SEND ERROR "ADVANCE OPTIONS" WEB PAGE
YES
1005
ADD ADVANCE OPTIONS
DONE
NO
1006
YES
ADD ANOTHER REQUIREMENT
1007
SEND BLANK "NEW REQUIREMENTS ENTRY," WEB PAGE
NO
DONE

Fig. 10

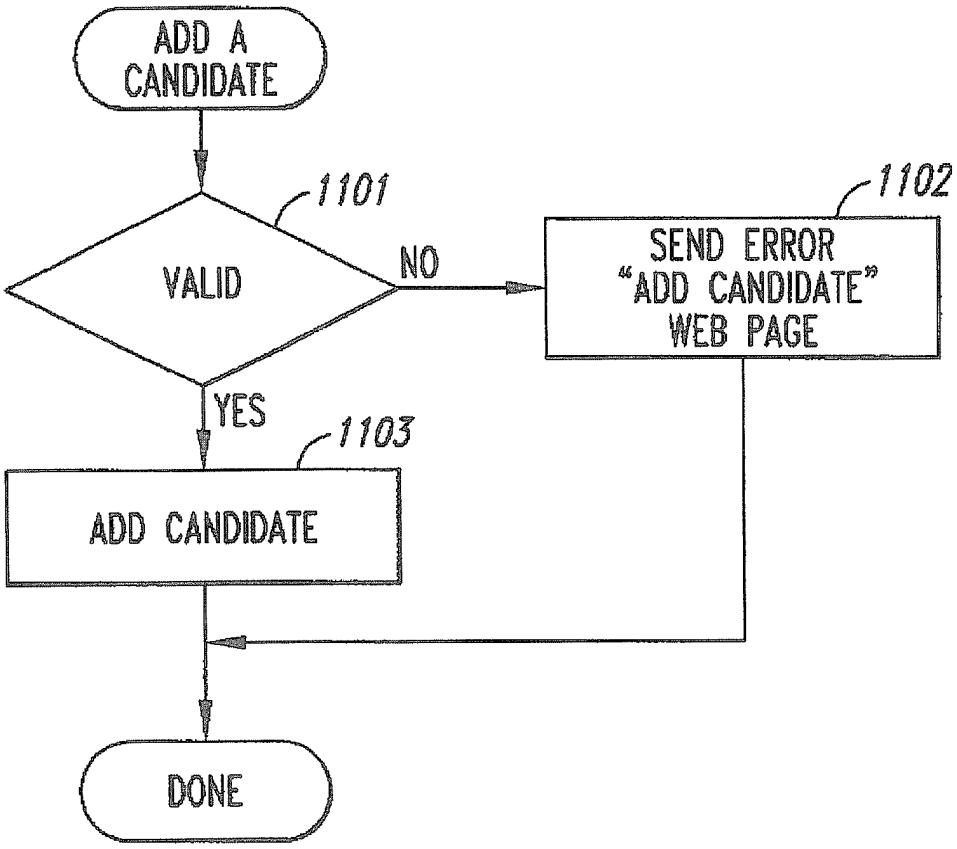
ADD A CANDIDATE
1101
VALID
NO
1102
SEND ERROR "ADD CANDIDATE" WEB PAGE
YES
1103
ADD CANDIDATE
DONE

Fig. 11

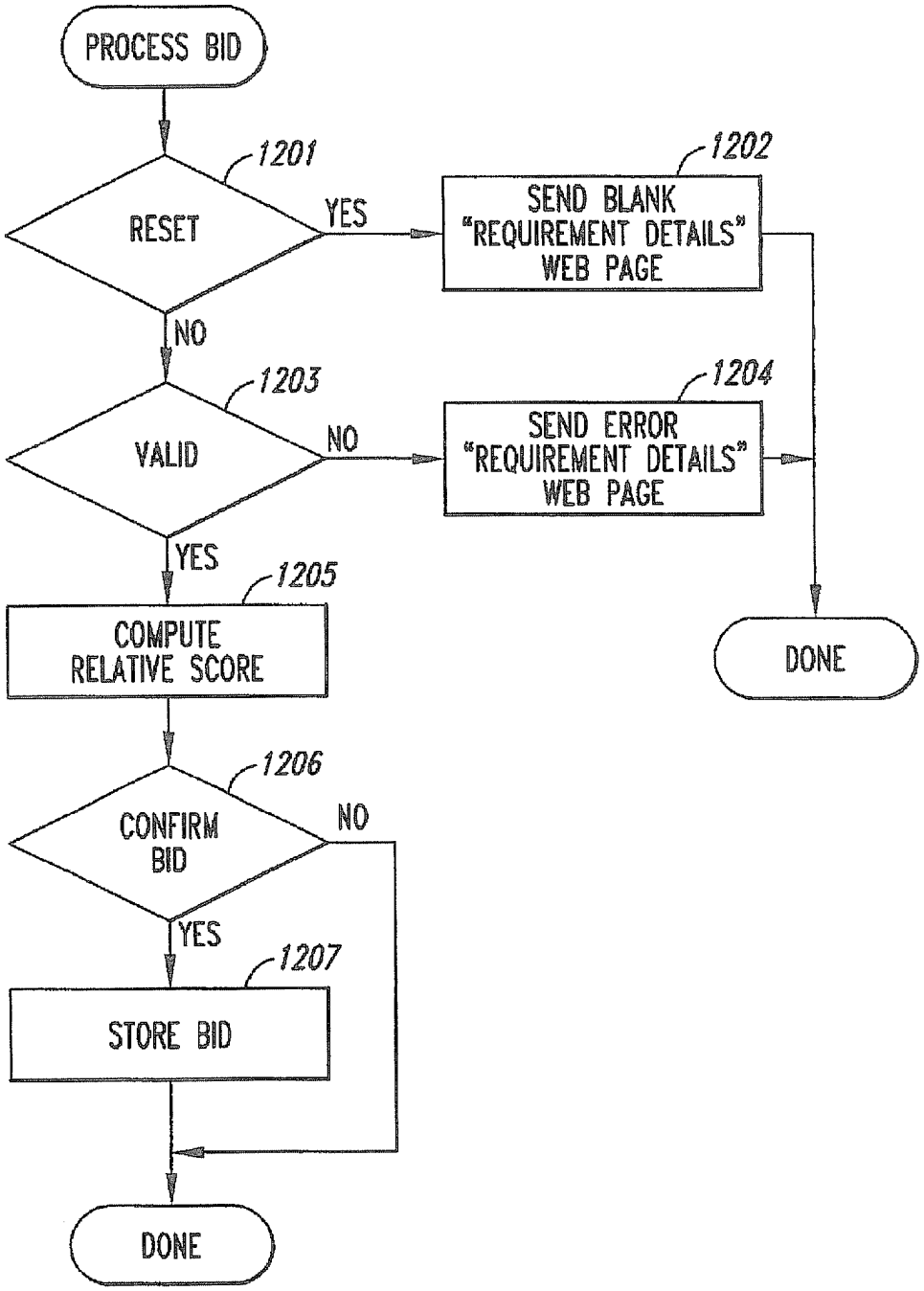
PROCESS BID
1201
RESET
YES
1202
SEND BLANK "REQUIREMENT DETAILS" WEB PAGE
NO
1203
VALID
NO
1204
SEND ERROR "REQUIREMENT DETAILS" WEB PAGE
YES
1205
COMPUTE RELATIVE SCORE
DONE
1206
CONFIRM BID
NO
YES
1207
STORE BID
DONE

Fig. 12

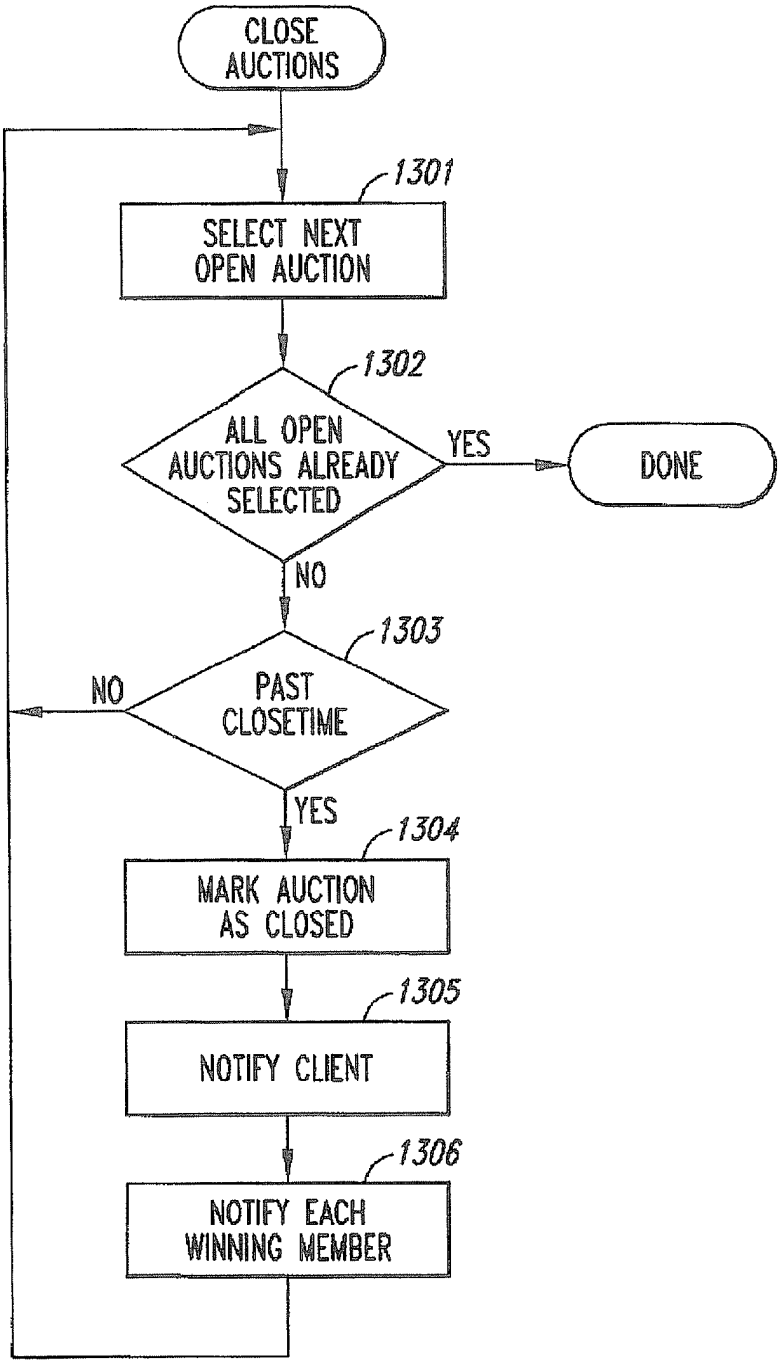
CLOSE AUCTIONS
1301
SELECT NEXT OPEN AUCTION
1302
ALL OPEN AUCTIONS ALREADY SELECTED
YES
DONE
NO
1303
NO
PAST CLOSETIME
YES
1304
MARK AUCTION AS CLOSED
1305
NOTIFY CLIENT
1306
NOTIFY EACH WINNING MEMBER

Fig. 13

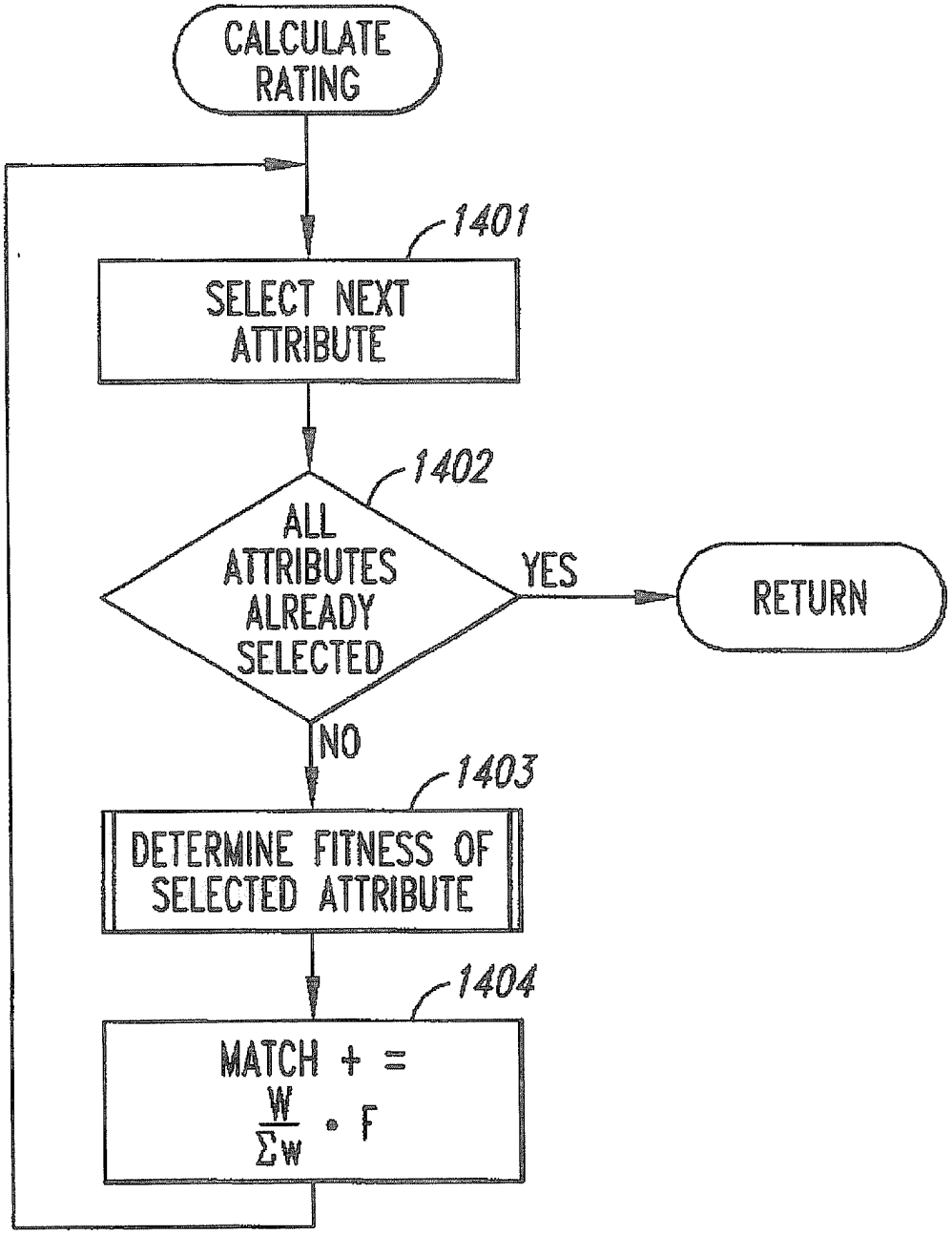
CALCULATE RATING
1401
SELECT NEXT ATTRIBUTE
1402
ALL ATTRIBUTES ALREADY SELECTED
YES
RETURN
NO
1403
DETERMINE FITNESS OF SELECTED ATTRIBUTE
1404
MATCH + = W/Σw • F

Fig. 14

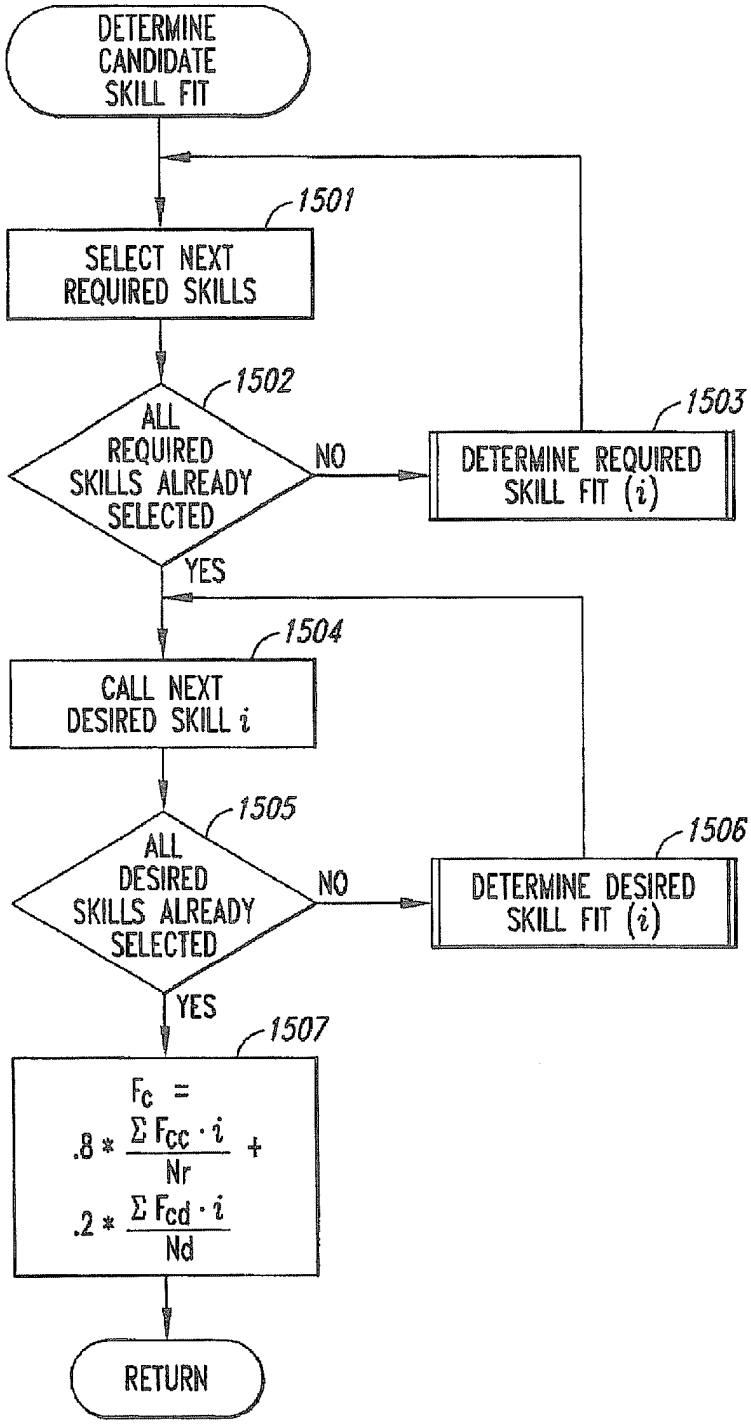
DETERMINE CANDIDATE SKILL FIT
1501
SELECT NEXT REQUIRED SKILLS
1502
ALL REQUIRED SKILLS ALREADY SELECTED
NO
1503
DETERMINE REQUIRED SKILL FIT (i)
YES
1504
CALL NEXT DESIRED SKILL i
1505
ALL DESIRED SKILLS ALREADY SELECTED
NO
1506
DETERMINE DESIRED SKILL FIT (i)
YES
1507
$F_c = .8 * \frac{\Sigma F_{cc} \cdot i}{Nr} + .2 * \frac{\Sigma F_{cd} \cdot i}{Nd}$
RETURN

Fig. 15

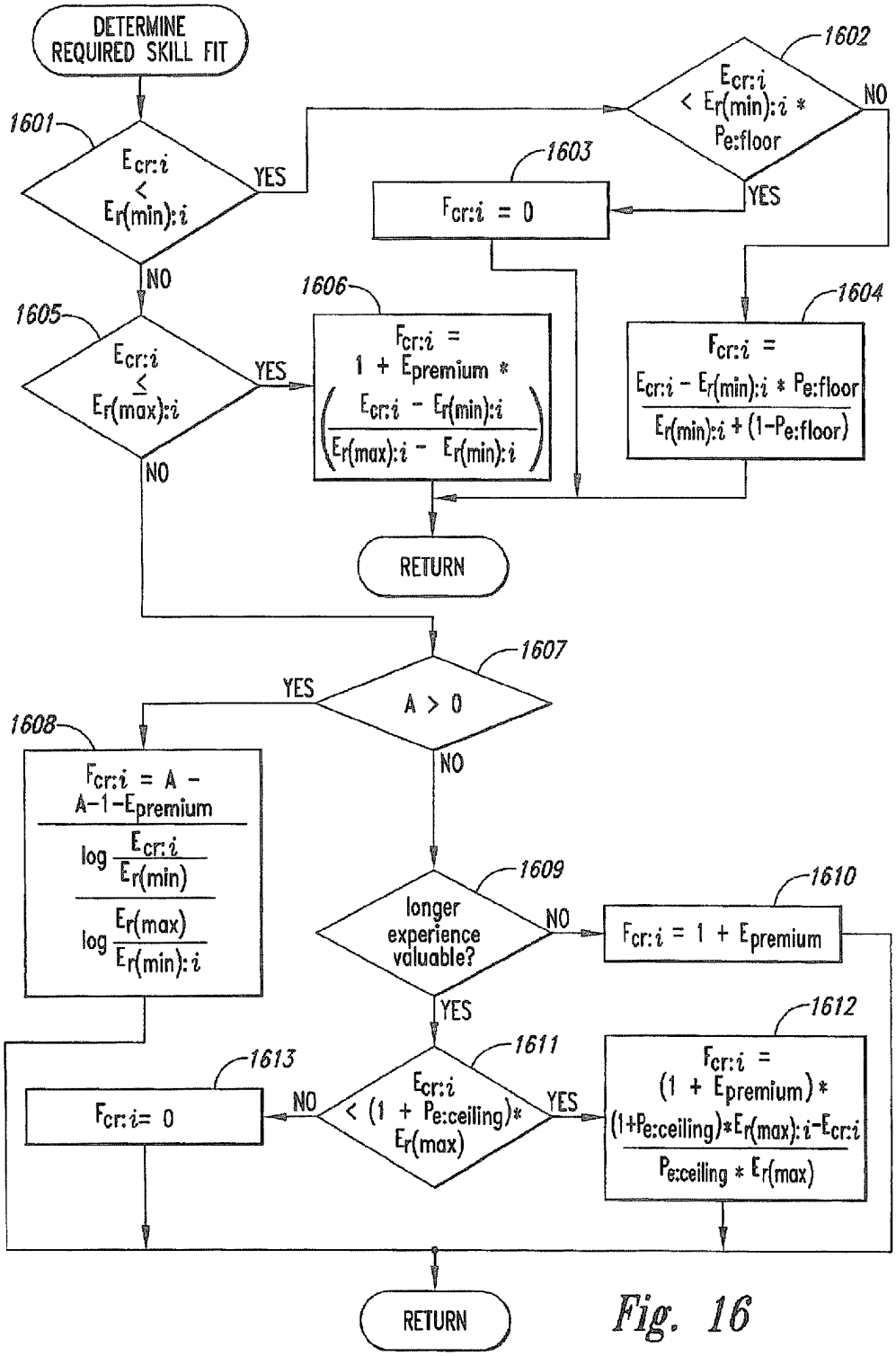
DETERMINE REQUIRED SKILL FIT
1601
$E_{cr:i} < E_{r(min):i}$
YES
NO
1602
$E_{cr:i} < E_{r(min):i} * P_{e:floor}$
NO
YES
1603
$F_{cr:i} = 0$
1604
$F_{cr:i} = \frac{E_{cr:i} - E_{r(min):i} * P_{e:floor}}{E_{r(min):i} + (1-P_{e:floor})}$
1605
$E_{cr:i} \leq E_{r(max):i}$
YES
NO
1606
$F_{cr:i} = 1 + E_{premium} * \left(\frac{E_{cr:i} - E_{r(min):i}}{E_{r(max):i} - E_{r(min):i}} \right)$
RETURN
1607
A > 0
YES
NO
1608
$F_{cr:i} = A - \frac{A-1-E_{premium}}{\log \frac{E_{cr:i}}{E_{r(min)}} \Big/ \log \frac{E_{r(max)}}{E_{r(min):i}}}$
1609
longer experience valuable?
NO
YES
1610
$F_{cr:i} = 1 + E_{premium}$
1611
$E_{cr:i} < (1 + P_{e:ceiling}) * E_{r(max)}$
NO
YES
1612
$F_{cr:i} = \frac{(1 + E_{premium}) * (1+P_{e:ceiling}) * E_{r(max):i} - E_{cr:i}}{P_{e:ceiling} * E_{r(max)}}$
1613
$F_{cr:i} = 0$
RETURN

Fig. 16

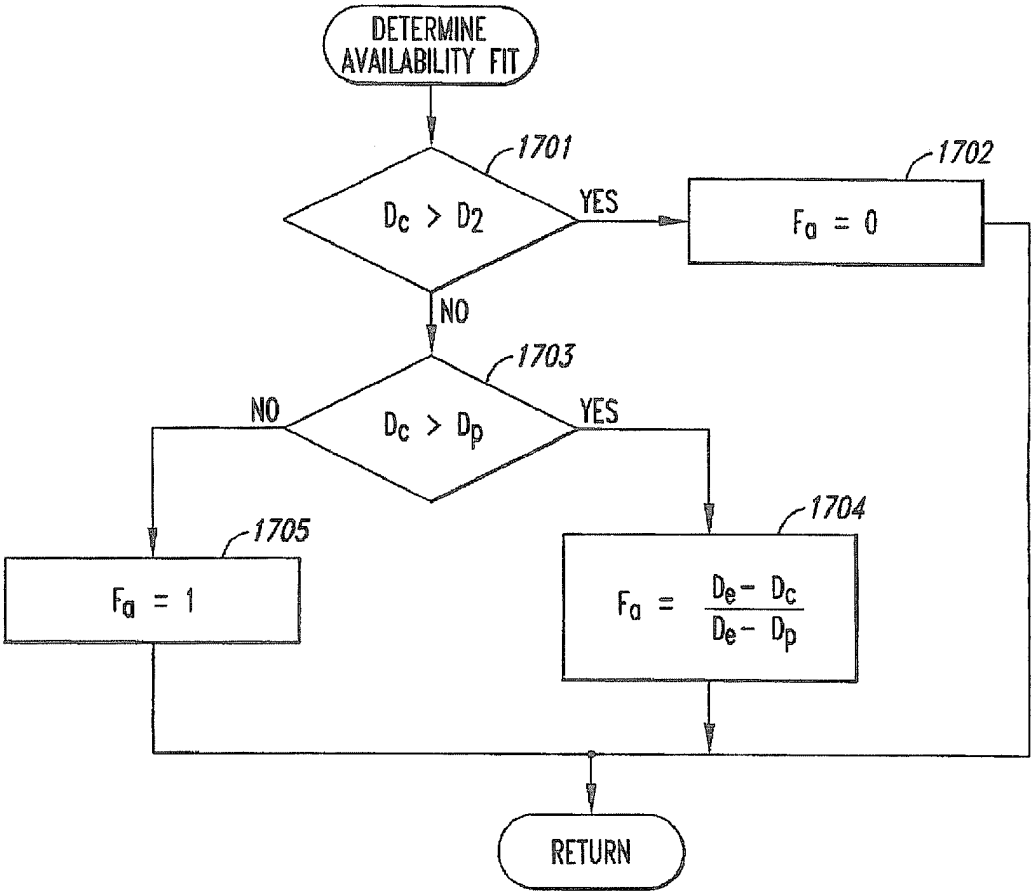
DETERMINE AVAILABILITY FIT
1701
$D_c > D_2$
YES
1702
$F_a = 0$
NO
1703
NO
$D_c > D_p$
YES
1704
1705
$F_a = 1$
$F_a = \frac{D_e - D_c}{D_e - D_p}$
RETURN

Fig. 17

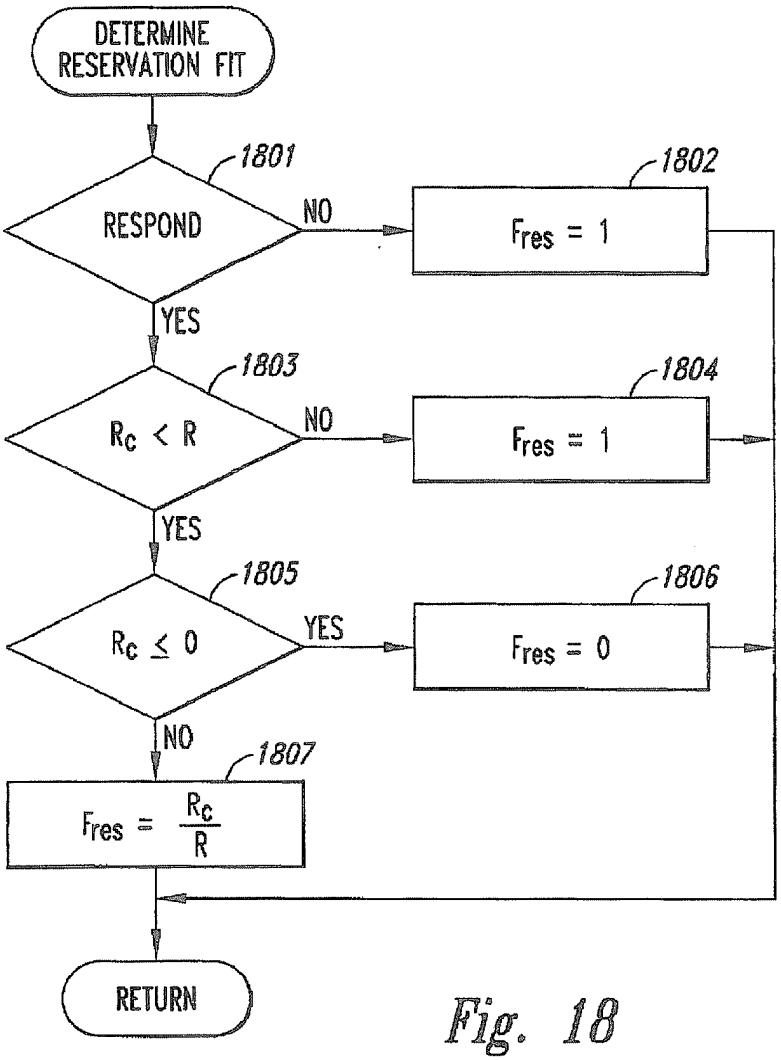
DETERMINE RESERVATION FIT
1801
RESPOND
NO
1802
Fres = 1
YES
1803
Rc < R
NO
1804
Fres = 1
YES
1805
Rc ≤ 0
YES
1806
Fres = 0
NO
1807
Fres = Rc/R
RETURN

Fig. 18

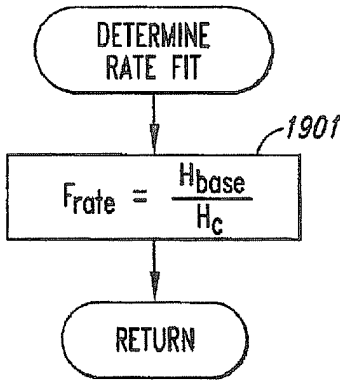
DETERMINE RATE FIT
1901
Frate = Hbase/Hc
RETURN

Fig. 19

METHOD AND SYSTEM FOR CONDUCTING AN AUCTION FOR RESOURCES

TECHNICAL FIELD

[0001] Method and system for conducting an auction and, more particularly, to method and system for conducting an auction for resources over the Internet.

BACKGROUND OF THE INVENTION

[0002] Because it facilitates electronic communications between vendors and purchasers, the Internet is increasingly being used to "electronic commerce."The Internet comprises a vast number of computers and computer networks that are interconnected through communication channels. Electronic commerce refers generally to commercial transactions that are at least partially conducted using the computer systems of the parties to the transactions. For example, a purchaser can use a personal computer to connect via the Internet to a vendor's computer. The purchaser can then interact with the vendor's computer to conduct the transaction. Although many of the commercial transactions that are performed today could be performed via electronic commerce, the acceptance and wide-spread use of electronic commerce depends, in large part, upon the ease-of-use of conducting such electronic commerce. If electronic commerce can be easily conducted, then even the novice computer user will choose to engage in electronic commerce. Therefore, it is important that techniques be developed to facilitate conducting electronic commerce.

[0003] The World Wide Web portion of the Internet is especially conducive to conducting electronic commerce. Many web servers have been developed through which vendors can advertise and sell product. The products can include items (e.g., music) that are delivered electronically to the purchaser over the Internet and items (e.g., books) that are delivered through conventional distribution channels (e.g., a common carrier). A server computer system may provide an electronic version of a catalog that lists the items that are available. A user, who is a potential purchaser, may browse through the catalog using a browser and select various items that are to be purchased. When the user has completed selecting the items to be purchased, the server computer system then prompts the user for information to complete the ordering of the items. The server computer system then typically confirms the order by sending a confirming web page to the client computer system and schedules shipment of the items.

[0004] The temporary employment industry has thrived based on the needs of employers for temporary employees and the desire of employees to work on a temporary basis. It is, however, difficult for an employer to find temporary employees with both the needed skills and the needed availability at a reasonable price. To assist in finding such temporary employees, an employer may register their needs with various temporary employment agencies. These agencies select their own candidates who best match the employer's needs and present those candidates to the employer. The employer can then review the presented candidates to identify which candidates best meets their needs. The employers may then interview the identified candidates and hire one of those candidates based on then interview.

[0005] Although the temporary employment industry has thrived, it has encountered many problems. For example, it is very difficult for a temporary employment agency to assess of the needs of employer. In particular, there is no standard technique for specifying the required or desired skills of a temporary employee. As a result, the agencies may waste time presenting candidates who have no chance of being hired by the employer. As another example, it is very difficult for an employer to evaluate the degree to which candidates meet the employer's needs. As a result, the employer may hire a candidate who is not the most qualified candidate. As another example, employers often limit their search for temporary employees to a small geographic area. As a result of this limited search, an employer may be forced to hire a candidate at a high price or with less than optimal skills.

BRIEF DESCRIPTION OF THE DRAWINGS

[0006] **FIG. 1** illustrates a sample web page for entry of "standard" job requirements.

[0007] **FIG. 2** illustrates a sample web page for entry of advance options.

[0008] **FIG. 3** illustrates a web page display of the requirement listings of an employer.

[0009] **FIG. 4** illustrates a sample web page for specifying the qualifications of a candidate.

[0010] **FIG. 5** illustrates a sample web page listing requirements whose auctions are open.

[0011] **FIG. 6** illustrates a sample web page that lists the details of a job requirement and that allows the submission of a bid.

[0012] **FIG. 7** illustrates a sample web page that lists the bids of a provider.

[0013] **FIG. 8** is a block diagram illustrating the components of a job placement system in one embodiment.

[0014] **FIG. 9** is a flow diagram illustrating example processing for entry of a new job requirement.

[0015] **FIG. 10** is a flow diagram illustrating example processing of the advance options web page.

[0016] **FIG. 11** is a flow diagram illustrating example processing of adding a new candidate.

[0017] **FIG. 12** is a flow diagram illustrating example processing of a bid.

[0018] **FIG. 13** is a flow diagram illustrating example processing when an auction closes.

[0019] **FIG. 14** is the flow diagram illustrating an example calculation of a match rating for a resource.

[0020] **FIG. 15** is a flow diagram illustrating an example calculation of the fitness for the skills of a candidate.

[0021] **FIG. 16** is a flow diagram illustrating an example calculation that determines the fitness of a required skill.

[0022] **FIG. 17** is a flow diagram illustrating an example calculation to determine the fitness for availability.

[0023] **FIG. 18** is a flow diagram illustrating an example calculation to determine the fitness for reservation.

[0024] **FIG. 19** is a flow diagram illustrating an example calculation to determine fitness for rate.

DETAILED DESCRIPTION

[0025] A method and system for selecting a resource is provided. In one embodiment, the resource system receives resource requirements that indicate target attributes of a target resource that is desired. The resource system receives offers to provide candidate resources to fill the resource requirements in an auction environment. Each candidate resource has candidate attributes that specify the characteristics of the candidate resource. The resource system generates a match rating for each candidate resource that indicates how closely the candidate attributes match the target attributes. The resource system then uses the match ratings to select a candidate resource whose candidate attributes best match the target attributes. In one embodiment, an employer advertises a job opening to be filled by a target resource, which is a person with certain skills who is available to work on the temporary basis. For example, the person may be a computer programmer with skills in certain programming languages. A target attribute of the resource requirements may be five years of experience in the C++ programming language. An employer may advertise that the job opening is to be filled with an employee on a full-time or temporary basis or with a contractor. The resource system allows the employer to advertise the desired skills of the job candidate along with other target attributes such as hourly rate and salary. The resource system allows offers (or bids) to be received for candidates to fill the job opening. Each candidate has their own set of skills. The resource system rates the candidates on their overall fitness to fill the position taking into consideration their skills, availability, and salary.

[0026] In one embodiment, the resource system uses a web-based employment auction system. The auction system provides various web pages for employers (or clients) to input their job requirements so that a reverse auction can be conducted to find a person who can best satisfy the requirements. The auction system provides various web pages for agencies (or members) to view the job requirements and offer (e.g., place a bid for) their candidates to fill the position. The agencies can view the details of other offers so that they can then offer a candidate who would be a better fit than any other currently offered candidate. The auction system uses a rating algorithm to identify how closely each candidate matches the job requirements. When the auction is closed, the auction system notifies the employer of those candidates with the highest ratings. The employer can then use a web-based interview system to arrange an interview with the candidates. The interviews may be conducted either in person, telephonically, or using an Internet-based meeting system. Once the interviews are complete, the employer notifies the resource system of the selected candidate. The resource system may also provide a web-based accounting system through which the agency of the selected candidate can submit bills to the employer.

[0027] **FIGS. 1 and 2** illustrate sample web pages for entry of job requirements. **FIG. 1** illustrates a sample web page for entry of "standard" job requirements. Employer field **101** identifies the name of the employer, "Millennium Corp."Reference field **102** contains a requirement reference, which is an identifier that allows the employer to group the various related jobs together. For example, an employer may want to track all jobs for fixing Y2K problems. Job field **103** indicates the job title associated with the requirement (e.g., "Y2K Senior Programmer"). Position field **104** indicates the number of positions with these requirements that the employer is looking to fill. Interview field **105** indicates the number of candidates that the employer is planning to interview. Maximum bill rate field **106** indicates the maximum rate that the employer is willing to pay. Project location fields **107**, **108**, and **109** indicate the country, state, and city in which the employee will work. Project data fields **110** and **111** indicate the start date of the project and the approximate duration of the project. Auction date fields **112** and **113** indicate the start and end date and time of the job auction. Skill set fields **114**, **115**, and **116** indicate the target skills, whether the skills are required or desired, and the minimum and maximum experience for each skill. For example, a skill may be experience in "Windows NT" programming. In this example, the employer selects a skill from a drop-down list of predefined skills and then selects the add skill button to add the skill requirement. Job description field **117** contains text describing the job. Buttons **118**, **119**, **120**, and **121** allow the employer to specify advance requirement options, that the requirements are complete, that the requirements should be saved for later editing, or that the requirement should be reset.

[0028] **FIG. 2** illustrates a sample web page for entry of advance options. These advance options allow the employer to specify how to rate certain conditions (e.g., experience in excess of maximum). Employer field **201** identifies the name of the employer, reference field **202** identifies the requirement reference, and job title field **203** identifies the job title. Skill set fields **204** and **205** identify the skill sets of the candidate that were entered as a standard requirement. Additional experience field **206** indicates how additional experience is to be treated (e.g., not preferred). The minimum experience for short list field **207** indicates the absolute minimum (i.e., floor) experience of candidates who will be considered. The absolute minimum experience is given as a percentage of the minimum experience. The short list is the list of candidates with the highest ratings who meet all the requirements and who would be interviewed if no more candidates were offered. The maximum experience for short list field **208** indicates the absolute maximum (e.g., ceiling) experience of candidates who will be considered. The premium on experience the field **209** indicates the premium placed on the amount of experience above the minimum experience but less than the maximum experience. The match percentage field **210** indicates the minimum rating of candidates who will be considered. The reservation field **211** indicates the number of days after the close of the auction that the candidate is required to stay available to allow the employer to make a decision. The factor weight fields **212**, **213**, **214**, and **215** indicate the relative weight of the fitness factors used to calculate the rating. In this example, the fitness factors are price, skill, availability, and reservation. Once an employer enters the weights, the employer uses the compute button **216** to direct calculation of the relative importance. The relative importance of the factors is a percentage of the weight of a factor to the total weight of all the factors. Add another requirement button **217** allows an employer to enter another requirement for the same requirement reference. Requirement complete button **218** allows an employer to indicate that the entry of the requirements is complete. Reset button **219** allows an employer to reset the advance options to their default values.

[0029] **FIG. 3** illustrates a web page display of the requirement listings of an employer. The web page **300** includes an

employer field **301**, options fields **302**, and requirement table **303**. The options fields allow an employer to indicate the types of requirements to list. For example, the employer may want to list all requirements; only those requirements whose auction is open, closed, or not started; or requirements that are not yet fully specified. The requirement table contains columns indicating the requirement reference, job title, assignment start date, skill set, number of positions, requirement status, auction close date, number of bids, and the lowest bid. In this example, two job requirements are listed. The first requirement **304** is for the job title of "Programmer" whose auction has not yet started. The second requirement **305** is for the job title of "Y2K Senior Programmer" whose auction has already started. The auction for the second requirement has received two bids and the lowest bid is $100 per hour.

[0030] **FIG. 4** illustrates a sample web page for specifying the qualifications of a candidate. Provider field **401** indicates the name of the provider (e.g., agency) of the candidate (e.g., "Rent-A-Programmer").

[0031] The name fields **402** indicate the name of the candidate, and the additional information fields indicate the addresses and phone number of the candidate. The skill set field **403** indicates the skills of the candidate. The skills may be selected from a drop-down list of predefined skills. The submit button **405** allows the provider to submit a candidate, the submit and update skills button **406** allows the provider to submit and update skills of the candidate, and the reset button **407** allows the provider to reset the fields of the web page to a default value.

[0032] **FIG. 5** illustrates a sample web page listing requirements lo whose auctions are open. Provider field **501** indicates the name of the provider of the candidate. The options fields **502** allow the provider to select whether to display all requirements or only those requirements that meet a predefined profile. The filter fields **503** allow the provider to indicate the order of the displayed listings and the criteria for selecting the listings to display. When a provider changes the filter, the provider selects the go button **504** to update the requirements listing. The requirement table **505** lists the job requirements that satisfy the filter.

[0033] **FIG. 6** illustrates a sample web page that lists the details of a job requirement and that allows the submission of a bid. Provider field **701** indicates the name of the provider. The requirement fields **702** indicate the various requirements of the job. The client specification fields **703** indicate various advance options relating to the job. The bid fields **704** allow a provider to submit a bid to provide a candidate for the job. The candidate code field **705** allows the provider to identify the candidate. The bid price field **706** allows the provider to enter the bid amount at a rate per hour. The availability date field **707** indicates the date at which the candidate is available to start the job. The reservation to date field **708** indicates the date until which the candidate is reserved. The interview time fields **709** indicate convenient times for an interview with the candidate. The relative score field **610** indicates the match rating for the candidate for this job. The compute relative score button **611** is used to recalculate to the match rating for the candidate. The clear button **612** is used to clear the bid fields, and the confirmed bid button **613** is used to submit the bid. The short list bid table **614** identifies those bids that are currently on the short list. The other bid table **615** identifies the other bids that are not on the short list.

[0034] **FIG. 7** illustrates a sample web page that lists the bids of a provider. Provider field **701** indicates the name of the provider. Options fields **702** allow the provider to select whether to display all the bids, or the bids for closed or open auctions. Filter fields **703** allow the user to specify how to order the bids and which bids to list. Go button **704** is used to regenerate the list after a filter fields have been changed. The bid table **705** contains in entry for each bid.

[0035] **FIG. 8** is a block diagram illustrating the components of a job placement system in one embodiment. The user computers **801** and the server computer **803** are interconnected via the Internet **802**. The computers may include a central processing unit, memory, input devices (e.g., keyboard and pointing device), output devices (e.g., display devices), and storage devices (e.g., disk drives). The memory and storage devices are computer-readable media that may contain computer instructions that implement the resource system. A computer-readable medium may also include a data transmission medium. The user computers may use a browser to access the web pages via the Internet. The server computer implements the job placement system. The job placement system includes a server engine **804**, an employer component **805**, a provider component **806**, an auction component **807**, a user database **808**, a job requirements database **809**, a candidate database **810**, and an auction database **811**. The server engine receives requests for web pages via the Internet and coordinates the generation and transmission of the web pages. The job placement system coordinates the defining of job requirements, registering of candidates, and conducting of the auctions for the jobs. The employer component coordinates the receiving of job requirements. The provider component coordinates the registering of candidates and the placing of bids on jobs whose auction is open. The auction component coordinates the closing of auctions and the notifying of the employer and providers of the results of the auction. The job placement system may also have an interview scheduling component to assist in the scheduling of the interviews between the employer and candidates with the highest rating. The job placement system may have an interview component to facilitate conducting an on-line interview. The job placement system may also have an accounting component for the submission of time sheets and subsequent payment. The user database contains an entry for each employer and provider that is registered to use the job placement system. The job requirement database contains information describing the requirements of each job that is defined. The candidate database contains an entry for each candidate that describes the candidate's qualifications. The auction database contains an entry for each job that indicates the bids that have been placed for that job.

[0036] One skilled in the art will appreciate that the concepts of the job placement system can be used in various environments other than the Internet. For example, the concepts can also be used in an electronic mail environment in which electronic mail messages may be used to provide information on jobs and to place bids. Also, various communication channels may be used such as a local area network, wide area network, or a point-to-point dial-up connection instead of the Internet. The server system may

comprise any combination of hardware or software that can support these concepts. In particular, a web server may actually include multiple computers. A user system may comprise any combination of hardware software that interacts with the server system. Also, one skilled in the art will appreciate that the resource system can be used to auction many different types of resources. For example, the resource system can be used to auction many different types of resources.

[0037] **FIG. 9** is a flow diagram illustrating example processing for entry of a new job requirement. This routine is invoked after an employer has submitted a new requirement entry web page, such as the web page shown in **FIG. 1**. In decision block **901**, if the user indicated to save the contents of the web page for later processing, then routine continues at block **902**, else the routine continues at block **904**. In block **902**, the routine stores the requirements in the job requirement database with an indication that the requirements are not yet complete. In block **903**, the routine sends a blank new requirements entry web page to the user computer and then completes. In decision block **904**, if the user indicated to reset or start over, then the routine continues at block **903**, else the routine continues at block **905**. In decision block **905**, if the data of the web page is valid, then the routine continues at block **907**, else routine continues at block **906**. The routine validates the values entered by the employer to ensure that they are consistent (e.g., ensuring that the end time of the auction is after the start time). In block **906**, the routine sends a new requirements entry web page to the user that specifies which data is not valid and then completes. In decision block **907**, if the user selected to enter advance requirements options, then the routine continues at block **908**, else the routine continues at block **909**. In block **908**, the routine sends a blank advance options web page to the user and then completes. In decision block **909**, if the user indicated that the requirements are complete, then the routine continues at block **910**. In block **910**, the routine adds the requirements to the job requirements database with an indication that the requirements are complete. In block **911**, the routine sends a blank new requirements entry web page to the user and then completes.

[0038] **FIG. 10** is a flow diagram illustrating example processing of the advance options web page. This routine is invoked after an employer has submitted an advance option web page, such as the web page of **FIG. 2**. In decision block **1001**, if the user indicated to reset the web page, then the routine continues at block **1002**, else the routine continues at block **1003**. In block **1002**, the routine sends a blank advance options web page to the user and then completes. In decision block **1003**, if the advance options are valid, then the routine continues at block **1005**, else the routine continues at block **1004**. In block **1004**, the routine sends an advance options web page to the user indicating the invalid data and then completes. In block **1005**, the routine adds the advance options to the job requirements database. In decision block **1006**, if the user indicated to add another requirement to the job reference, then the routine continues at block **1007**, else the routine completes. In block **1007**, the routine sends a blank new requirement entry web page to the user and then completes

[0039] **FIG. 11** is a flow diagram illustrating example processing of registering a new candidate. This routine is invoked when a user submits a candidate web page. In decision block **1101**, if the data of the candidate web page is valid, then the routine continues at block **1103**, else the routine continues at block **1102**. In block **1102**, the routine sends the add a candidate web page to the user indicating the invalid data and then completes. In block **1103**, the routine adds the candidate information to the candidate database and completes.

[0040] **FIG. 12** is a flow diagram illustrating example processing of a bid. This routine is invoked when the user submits a bid on a job. In decision block **1201**, if the user indicates to reset the web page, then the routine continues at block **1202**, else the routine continues at block **1203**. In block **1202**, the routine sends a blank requirements detail web page to the user and then completes. In decision block **1203**, if the bid data is valid, then the routine continues at block **1205**, else the routine continues at block **1204**. In block **1204**, the routine a requirement details web page indicating the invalid data to the user and then completes. In block **1205**, the routine calculates a relative score for the bid and sends a web page with relative score to the user. In decision block **1206**, if the user indicates to confirm a bid, then the routine continues at step **1207**, else the routine completes. In block **1207**, the routine stores the bid in the bid database and then completes.

[0041] **FIG. 13** is a flow diagram illustrating example processing when an auction closes. This routine may be invoked periodically to process the auctions that recently closed. In block **1301**, the routine selects the next open auction from the auction database. In decision block **1302**, if all the open auction have already been selected, then the routine completes, else the routine continues at block **1303**. In decision block **1303**, if the auction is past its close time, then the routine continues at block **1304**, else the routine loops to block **1301** to select the next open auction. In block **1304**, the routine marks the selected auction as closed. In block **1305**, the routine notifies the employer of the results of the auction. In block **1306**, the routine notifies each winning provider and then loops to block **1301** to select the next open auction.

Match Rating

[0042] FIGS. **14-19** are flow diagrams illustrating the calculations of a match rating. In one embodiment, the resource system calculates a "fitness ratings" indicating how closely each resource attribute matches the target attribute. The resource system then combines the fitness ratings of the attributes using weighting factors to generate an overall match rating.

[0043] **FIG. 14** is the flow diagram illustrating an example calculation of a match rating for a resource. This routine calculates a fitness of each attribute of the resource relative to the attributes of the target resource. In block **1401**, the routine selects the next attribute starting with the first. In decision block **1402**, if all the attributes have already been selected, then the routine completes, else the routine continues at block **1403**. In block **1403**, the routine invokes a determine fitness routine for the selected attribute. For example, when the resource is a person applying for job, then the attributes may be the skills, the availability, the reservation, and the hourly rate. In block **1404**, the routine sums the weighted fitness of the selected attribute with the current match rating. The routine then loops to block **1401**

to select the next attribute. When the routine completes, the variable match contains the match rating.

[0044] The following table defines the variables used in controlling the rating algorithm. These variables can be specified by the employer to indicate how to rate various attributes.

Symbol	Meaning
A	Asymptote: value of skill fit that the calculated value approaches asymptotically as actual experiences increases
E_{cr}	Sum of candidate's experience in required skills
$E_{cr\ i}$	Candidate's experience in required skill 'i'.
E_{cd}	Sum of candidate's experience in desired skills
$E_{cd\ i}$	Candidate's experience in desired skill 'i'.
$E_{r(min)\ i}$	Minimum required experience in required skill 'i'.
$Er_{(max)\ i}$	Maximum required experience in required skill 'i'.
$E_{d(min)\ i}$	Minimum required experience in desired skill 'i'.
$E_{d(max)\ i}$	Maximum required experience in desired skill 'i'.
$E_{Premium}$	Premium placed on $E_{cr(max)}$ over $E_{cr(min)}$.
$P_{e\ floor}$	Experience floor percentage. Experience less than $P_{e\ floor} * E_{r(min)\ i}$ has no value for this requirement.
$P_{e\ ceiling}$	Experience ceiling percentage. Experience greater than $P_{e\ ceiling} \times E_{r(max)\ i}$ has no value for this requirement.
F_a	Fit of candidate's availability to the requirement
F_{res}	Fit of candidate's reservation for the requirement
F_r	Minimum degree of fit required
F_{rate}	Fit of rate
N_r	Number of items in the required skills list
N_d	Number of items in the desired skills list
D_p	Date planned for assignment to start
D_l	Last allowed date for assignment to start
D_c	Date when consultant is available for assignment
D_o	Date (and time) when auction began
D_b	Date (and time) when bid was received
R	Reservation period - number of days after close of auction
R_c	Period during which provider agrees to reserve the candidate for this requirement
W_f	Raw weight for fit
W_a	Raw weight for availability
W_r	Raw weight for reservation period
W_p	Raw weight for price
H_c	Consultant's hourly rate
H_{base}	Base rate per hour

[0045] FIG. 15 is a flow diagram illustrating an example calculation of the fitness for the skills of a candidate. In this example, the skills include both required and desired skills. In blocks 1501-1503, the routine loops calculating a fitness value for each required skill. In block 1501, the routine selects the next required skill starting with the first. In decision block 1502, if all the required skills have already been selected, then the routine continues at block 1504, else the routine continues at block 1503. In block 1503, the routine invokes the routine to calculate the fitness for the selected required skill and then loops to block 1501 to select the next required skill. In blocks 1504-1506, the routine loops calculating a fitness value for each desired skill. In block 1504, the routine selects the next desired skill starting with the first. In decision block 1505, if all the desired skills have already been selected, then the routine continues at block 1507, else the routine continues at block 1506. In block 1506, the routine invokes a routine to calculate the fitness value for the selected desired skill and then loops to block 1504 to select the next desired skill. In block 1507, the routine combines the fitness values for the required skills and the fitness value for the desired is skills into an overall skill fitness for the candidate. In one embodiment, the routine uses the following equation to combine the fitness values of the required skill with the fitness of the desired skill.

$$F_c = 0.8 \times \frac{\sum_{i=1}^{i=N_r} F_{cr\,i}}{N_r} + 0.2 \times \frac{\sum_{j=1}^{j=N_d} F_{cd\,j}}{N_d}$$

[0046] If there are no desired skills, then the weight factor for the required skills is 1.0, rather than 0.8. The routine returns.

[0047] FIG. 16 is a flow diagram illustrating an example calculation that determines the fitness of a required skill. Although not shown, the fitness of desired skills is calculated in a similar manner. In decision block 1601, if the candidate's experience for the required skill ($E_{cr:i}$) is less than the minimum experience for the skill ($E_{r(min):i}$), then the routine continues at block 1602, else the routine continues at block 1605. In decision block 1602, if the candidate's experience for the skill ($E_{cr:i}$) is less than the floor experience ($E_{r(min):i} * P_{e:floor}$), then the routine continues at block 1603, else the routine continues at block 1604. In block 1603, the routine sets the fitness for the required skill ($E_{cr.i}$) to zero and then returns. In block 1604, the routine sets the fitness for the required skill ($E_{cr:i}$) to range linearly between the floor experience and the minimum experience according to the following equation:

$$F_{cr\,i} = \frac{E_{cr\,i} - E_{r(\min)i} \cdot P_{e\ floor}}{E_{r(\min)i} \cdot (1 - P_{e\ floor})}$$

[0048] The routine then returns. In decision block 1605, if the candidate's experience for the required skill ($E_{r(max):i}$) is less than or equal the maximum experience for the skill ($E_{cr:i}$), then the routine continues at block 1606, else the routine continues at block 1607. In block 1606, the routine sets the candidate's fitness to one plus a fraction of the experience premium based on the ratio of the candidate's experience ($F_{cr:i}$) to the difference between the maximum experience and minimum experience as indicated by the following equation:

$$F_{cr\,i} = 1 + E_{Premium} \cdot \frac{E_{cr\,i} - E_{r(\min)}}{E_{r(\max)i} - E_{r(\min)i}}$$

[0049] The routine then returns. In block 1607, if the asymptote is greater than zero, then the routine continues at block 1608, else the routine continues at block 1609. In a block 1608, the routine sets the candidate's fitness as indicated by the following equation:

$$F_{cri} = A - \frac{A - 1 - E_{Premium}}{\left[\frac{\text{Log}\frac{E_{cri}}{E_{r(\min)}}}{\text{Log}\frac{E_{r(\min)}}{E_{r(\min)i}}}\right]}$$

[0050] The routine then returns. In block **1609**, if longer experience is valued, then the routine continues at block **1611**, else the routine continues at block **1610**. In block **1610**, the routine sets the candidate's fitness to one plus the experience premium and then returns. In decision block **1611**, if the candidate's experience is less than the ceiling experience, then the routine continues at block **1612**, else the routine continues at block **1613**. In block **1612**, the routine sets the candidate's fitness to one plus the experience premium times a ratio of the candidate's experience to the difference between the ceiling experience and the maximum experience as indicated by the following equation:

$$F_{cr\,i} = (1 + E_{Premium}) \cdot \frac{(1 + P_{e\,ceiling}) \cdot E_{r(max)} - E_{cr\,i}}{P_{e\,Ceiling} \cdot E_{r\,max}}$$

[0051] In block **1613**, the routine sets the candidate's fitness to zero and then returns.

[0052] **FIG. 17** is a flow diagram illustrating an example calculation to determine the fitness for availability (D_c). In decision block **1701**, if the candidate's availability (D_c) is greater than the latest availability date (D_l), then the routine continues at block **1702**, else the routine continues at block **1703**. In block **1702**, the routine sets the candidate's fitness (F_a) to zero and then returns. In decision block **1703**, if the candidate's availability (D_c) is later than the planned availability (D_p), then the routine continues at block **1704**, else the routine continues at block **1705**. In block **1704**, the routine sets the candidate's fitness to the ratio of the difference between the latest availability (D_l) and the candidate's availability (D_c) to the difference between the latest availability (D_l) and the desired availability (D_p). The routine then returns. In block **1705**, the routine sets the candidate's fitness to **1** and then returns.

[0053] **FIG. 18** is a flow diagram illustrating an example calculation to determine the fitness for reservation. In decision block **1801**, if a reservation is specified, then the routine continues at block **1803**, else the routine continues at block **1802**. In block **1802**, the routine sets the candidate's fitness (F_{res}) to one and then returns. In decision block **1803**, if the candidate's reservation (R_c) is less than the target reservation (R), then the routine continues at block **1805**, else the routine continues at block **1804**. In block **1804**, the routine sets the candidate's fitness to one and then returns. In decision block **1805**, if the candidate's reservation is less than or equal to zero, then routine continues at block **1806**, else the routine continues at block **1807**. In block **1806**, the routine sets the candidate's fitness to zero and then returns. In block **1807**, the routine sets the candidate's fitness to the ratio of the candidate's reservation to the target reservation and then returns.

[0054] **FIG. 19** is a flow diagram illustrating an example calculation to determine fitness for rate. In block **1901**, the routine sets the candidate's fitness (F_{rate}) to the base rate (H_{base}) divided by the candidate's rate (H_c) and then returns.

[0055] From the foregoing, it will be appreciated that although specific embodiments of the job placement system have been described for purposes of illustration, various modifications may be made without deviating from the spirit in the scope of the invention. Accordingly the invention is not limited except by the following claims.

1. A method in a computer system for selection of a resource, the method comprising:

providing a resource requirement indicating target attributes of a target resource;

receiving a plurality of offers to provide a candidate resource, each candidate resource having candidate attributes;

for each offered candidate resource, generating a match rating between the candidate attributes of the candidate resource and the target attributes of the target resource; and

selecting a candidate resource based on the generated match ratings.

2. The method of claim 1 including receiving the resource requirement from a consumer of the resource.

3. The method of claim 1 wherein the offers are received from a suppliers of candidate resources.

4. The method of claim 1 wherein the resources are people and the attributes include skills of the person and hourly rate.

5. The method of claim 1 wherein the computer system is a server connected to the Internet.

6. A method in a computer system for conducting a reverse auction for services of people, the method comprising:

receiving an indication of requirements of a person from a consumer of services;

advertising the indicated requirements;

receiving a plurality of offers to provide a person;

generating a match rating for each offered person indication how well that person meets the requirements; and

selecting an offered person based on the match ratings.

7. The method of claim 6 including selecting multiple offered persons based on the match ratings.

8. The method of claim 6 wherein the requirements includes skills.

9. The method of claim 6 wherein the requirements include start date.

10. The method of claim 6 wherein the requirements includes reservation date.

11. The method of claim 6 wherein the requirement includes pricing information.

12. The method of claim 6 wherein the generating of the match rating includes identifying how closely a person matches each requirement.

13. A method in a computer system for evaluating an offered resource, the resource having attributes, each attribute having a resource value, the method comprising:

identifying target values for each attribute;

for each attribute, generating an attribute match rating indicating how well the corresponding resource value matches the corresponding target value; and

combining the generated attribute match ratings to generate an overall match rating for the offered resource.

14. The method of claim 13 wherein the combining of the generated attribute match ratings includes applying a weight factor to each attribute match rating.

15. The method of claim 13 wherein the resource is offered at a reverse auction.

16. The method of claim 13 wherein the attributes include skills of a person.

17. The method of claim 13 wherein the attributes include rate of a person.

18. The method of claim 13 wherein the attributes include availability of a person.

19. The method of claim 13 wherein the attributes include reservation of a person.

20. A computer system for coordinating the providing of resources, comprising:

an auction component that receives resource requirements, that advertises the received resource requirements, that receives a description of a resource, that places a bid to provide the resource, and that selects those resources that most closely match the received resource requirements;

an interview component that coordinates the interviewing of the selected resource by the provider of the resource requirements;

a selection component that coordinates the selection of an interviewed resource; and

an accounting component that coordinates the submitting of bills provided by the selected resource.

21. The computer system of claim 20 wherein the computer system is a web server.

22. The computer system of claim 20 wherein the resources are people.

23. The computer system of claim 20 wherein the auction component rates how closely a resource matches the resource requirements.

* * * * *

Appendix C – Related Proceedings Appendix

None

Monster Worldwide, Inc. Exhibit 1010 (p.274/1328)

Electronic Patent Application Fee Transmittal

Application Number:	10101644
Filing Date:	19-Mar-2002
Title of Invention:	Apparatus and methods for providing career and employment services
First Named Inventor/Applicant Name:	Marc Vianello
Filer:	Samuel Digirolamo/Jennifer Birmingham
Attorney Docket Number:	15703.10002

Filed as Small Entity

Utility Filing Fees

Description	Fee Code	Quantity	Amount	Sub-Total in USD($)
Basic Filing:				
Pages:				
Claims:				
Miscellaneous-Filing:				
Petition:				
Patent-Appeals-and-Interference:				
Filing a brief in support of an appeal	2402	1	250	250
Post-Allowance-and-Post-Issuance:				
Extension-of-Time:				

Description	Fee Code	Quantity	Amount	Sub-Total in USD($)
Miscellaneous:				
			Total in USD ($)	**250**

Electronic Acknowledgement Receipt

EFS ID:	1528166
Application Number:	10101644
International Application Number:	
Confirmation Number:	8626
Title of Invention:	Apparatus and methods for providing career and employment services
First Named Inventor/Applicant Name:	Marc Vianello
Customer Number:	27128
Filer:	Samuel Digirolamo/Jennifer Birmingham
Filer Authorized By:	Samuel Digirolamo
Attorney Docket Number:	15703.10002
Receipt Date:	20-FEB-2007
Filing Date:	19-MAR-2002
Time Stamp:	13:19:18
Application Type:	Utility

Payment information:

Submitted with Payment	yes
Payment was successfully received in RAM	$250
RAM confirmation Number	2871
Deposit Account	110160
The Director of the USPTO is hereby authorized to charge indicated fees and credit any overpayment as follows: Charge any Additional Fees required under 37 C.F.R. Section 1.16 and 1.17	

File Listing:

Document Number	Document Description	File Name	File Size(Bytes)	Multi Part /.zip	Pages (if appl.)
1	Appeal Brief Filed	appealbrief.pdf	8156428	no	55
Warnings:					
Information:					
2	Appeal Brief Filed	appealappendix.pdf	13781266	no	94
Warnings:					
Information:					
3	Fee Worksheet (PTO-06)	fee-info.pdf	8168	no	2
Warnings:					
Information:					
		Total Files Size (in bytes):	21945862		

This Acknowledgement Receipt evidences receipt on the noted date by the USPTO of the indicated documents, characterized by the applicant, and including page counts, where applicable. It serves as evidence of receipt similar to a Post Card, as described in MPEP 503.

New Applications Under 35 U.S.C. 111
If a new application is being filed and the application includes the necessary components for a filing date (see 37 CFR 1.53(b)-(d) and MPEP 506), a Filing Receipt (37 CFR 1.54) will be issued in due course and the date shown on this Acknowledgement Receipt will establish the filing date of the application.

National Stage of an International Application under 35 U.S.C. 371
If a timely submission to enter the national stage of an international application is compliant with the conditions of 35 U.S.C. 371 and other applicable requirements a Form PCT/DO/EO/903 indicating acceptance of the application as a national stage submission under 35 U.S.C. 371 will be issued in addition to the Filing Receipt, in due course.

New International Application Filed with the USPTO as a Receiving Office
If a new international application is being filed and the international application includes the necessary components for an international filing date (see PCT Article 11 and MPEP 1810), a Notification of the International Application Number and of the International Filing Date (Form PCT/RO/105) will be issued in due course, subject to prescriptions concerning national security, and the date shown on this Acknowledgement Receipt will establish the international filing date of the application.

PTO/SB/31 (09-06)
Approved for use through 03/31/2007. OMB 0651-0031
U.S. Patent and Trademark Office; U.S. DEPARTMENT OF COMMERCE
Under the Paperwork Reduction Act of 1995, no persons are required to respond to a collection of information unless it displays a valid OMB control number.

NOTICE OF APPEAL FROM THE EXAMINER TO THE BOARD OF PATENT APPEALS AND INTERFERENCES

Docket Number (Optional): **15703.10002**

I hereby certify that this correspondence is being electronically transmitted to the USPTO via EFSWeb or deposited with the United States Postal Service with sufficient postage as first class mail in an envelope addressed to "Commissioner for Patents, P.O. Box 1450, Alexandria, VA 22313-1450" [37 CFR 1.8(a)]
on January 8, 2007
Signature Jennifer Birmingham
Typed or printed name **Jennifer Birmingham**

In re Application of: **Marc Vianello**

Application Number	Filed
10/101,644	**March 19, 2002**

For: **APPARATUS AND METHODS FOR PROVIDING CAREER EMPLOYMENT SERVICES**

Art Unit	Examiner
3623	**Romain Jeanty**

Applicant hereby **appeals** to the Board of Patent Appeals and Interferences from the last decision of the examiner.

The fee for this Notice of Appeal is (37 CFR 41.20(b)(1)) $ **500.00**

☒ Applicant claims small entity status. See 37 CFR 1.27. Therefore, the fee shown above is reduced by half, and the resulting fee is: $ **250.00**

☐ A check in the amount of the fee is enclosed.

☐ Payment by credit card. Form PTO-2038 is attached.

☒ The Director has already been authorized to charge fees in this application to a Deposit Account. I have enclosed a duplicate copy of this sheet.

☐ The Director is hereby authorized to charge any fees which may be required, or credit any overpayment to Deposit Account No. **11-0160** . I have enclosed a duplicate copy of this sheet.

☐ A petition for an extension of time under 37 CFR 1.136(a) (PTO/SB/22) is enclosed.

WARNING: Information on this form may become public. Credit card information should not be included on this form. Provide credit card information and authorization on PTO-2038.

I am the

☐ applicant/inventor.

☐ assignee of record of the entire interest.
See 37 CFR 3.71. Statement under 37 CFR 3.73(b) is enclosed. (Form PTO/SB/96)

☒ attorney or agent of record.
Registration number **29,915** .

☐ attorney or agent acting under 37 CFR 1.34.
Registration number if acting under 37 CFR 1.34. _____

Signature

Samuel Digirolamo
Typed or printed name

314-345-6000
Telephone number

8 JAN 07
Date

NOTE: Signatures of all the inventors or assignees of record of the entire interest or their representative(s) are required. Submit multiple forms if more than one signature is required, see below*.

☒ *Total of **1** forms are submitted.

This collection of information is required by 37 CFR 41.31. The information is required to obtain or retain a benefit by the public which is to file (and by the USPTO to process) an application. Confidentiality is governed by 35 U.S.C. 122 and 37 CFR 1.11, 1.14 and 41.6. This collection is estimated to take 12 minutes to complete, including gathering, preparing, and submitting the completed application form to the USPTO. Time will vary depending upon the individual case. Any comments on the amount of time you require to complete this form and/or suggestions for reducing this burden, should be sent to the Chief Information Officer, U.S. Patent and Trademark Office, U.S. Department of Commerce, P.O. Box 1450, Alexandria, VA 22313-1450. DO NOT SEND FEES OR COMPLETED FORMS TO THIS ADDRESS. **SEND TO: Commissioner for Patents, P.O. Box 1450, Alexandria, VA 22313-1450.**

If you need assistance in completing the form, call 1-800-PTO-9199 and select option 2.

Electronic Patent Application Fee Transmittal

Application Number:	10101644
Filing Date:	19-Mar-2002
Title of Invention:	Apparatus and methods for providing career and employment services
First Named Inventor/Applicant Name:	Marc Vianello
Filer:	Samuel Digirolamo/Jennifer Birmingham
Attorney Docket Number:	15703.10002

Filed as Small Entity

Utility Filing Fees

Description	Fee Code	Quantity	Amount	Sub-Total in USD($)
Basic Filing:				
Pages:				
Claims:				
Miscellaneous-Filing:				
Petition:				
Patent-Appeals-and-Interference:				
Notice of appeal	2401	1	250	250
Post-Allowance-and-Post-Issuance:				
Extension-of-Time:				

Description	Fee Code	Quantity	Amount	Sub-Total in USD($)
Miscellaneous:				
		Total in USD ($)		**250**

Electronic Acknowledgement Receipt

EFS ID:	1424840
Application Number:	10101644
International Application Number:	
Confirmation Number:	8626
Title of Invention:	Apparatus and methods for providing career and employment services
First Named Inventor/Applicant Name:	Marc Vianello
Customer Number:	27128
Filer:	Samuel Digirolamo/Jennifer Birmingham
Filer Authorized By:	Samuel Digirolamo
Attorney Docket Number:	15703.10002
Receipt Date:	08-JAN-2007
Filing Date:	19-MAR-2002
Time Stamp:	21:38:39
Application Type:	Utility

Payment information:

Submitted with Payment	yes
Payment was successfully received in RAM	$250
RAM confirmation Number	1127
Deposit Account	110160
The Director of the USPTO is hereby authorized to charge indicated fees and credit any overpayment as follows: Charge any Additional Fees required under 37 C.F.R. Section 1.16 and 1.17	

File Listing:

Document Number	Document Description	File Name	File Size(Bytes)	Multi Part /.zip	Pages (if appl.)
1	Notice of Appeal Filed	10002NOTICE.pdf	238559	no	1
Warnings:					
Information:					
2	Fee Worksheet (PTO-06)	fee-info.pdf	8155	no	2
Warnings:					
Information:					
		Total Files Size (in bytes):	246714		

This Acknowledgement Receipt evidences receipt on the noted date by the USPTO of the indicated documents, characterized by the applicant, and including page counts, where applicable. It serves as evidence of receipt similar to a Post Card, as described in MPEP 503.

New Applications Under 35 U.S.C. 111
If a new application is being filed and the application includes the necessary components for a filing date (see 37 CFR 1.53(b)-(d) and MPEP 506), a Filing Receipt (37 CFR 1.54) will be issued in due course and the date shown on this Acknowledgement Receipt will establish the filing date of the application.

National Stage of an International Application under 35 U.S.C. 371
If a timely submission to enter the national stage of an international application is compliant with the conditions of 35 U.S.C. 371 and other applicable requirements a Form PCT/DO/EO/903 indicating acceptance of the application as a national stage submission under 35 U.S.C. 371 will be issued in addition to the Filing Receipt, in due course.

UNITED STATES PATENT AND TRADEMARK OFFICE

UNITED STATES DEPARTMENT OF COMMERCE
United States Patent and Trademark Office
Address: COMMISSIONER FOR PATENTS
P.O. Box 1450
Alexandria, Virginia 22313-1450
www.uspto.gov

APPLICATION NO.	FILING DATE	FIRST NAMED INVENTOR	ATTORNEY DOCKET NO.	CONFIRMATION NO.
10/101,644	03/19/2002	Marc Vianello	15703.10002	8626

27128 7590 11/08/2006

BLACKWELL SANDERS PEPER MARTIN LLP
720 OLIVE STREET
SUITE 2400
ST. LOUIS, MO 63101

EXAMINER	
JEANTY, ROMAIN	

ART UNIT	PAPER NUMBER
3623	

DATE MAILED: 11/08/2006

Please find below and/or attached an Office communication concerning this application or proceeding.

Office Action Summary	Application No.	Applicant(s)	
	10/101,644	VIANELLO, MARC	
	Examiner	Art Unit	
	Romain Jeanty	3623	

-- The MAILING DATE of this communication appears on the cover sheet with the correspondence address --

Period for Reply

A SHORTENED STATUTORY PERIOD FOR REPLY IS SET TO EXPIRE 3 MONTH(S) OR THIRTY (30) DAYS, WHICHEVER IS LONGER, FROM THE MAILING DATE OF THIS COMMUNICATION.

- Extensions of time may be available under the provisions of 37 CFR 1.136(a). In no event, however, may a reply be timely filed after SIX (6) MONTHS from the mailing date of this communication.
- If NO period for reply is specified above, the maximum statutory period will apply and will expire SIX (6) MONTHS from the mailing date of this communication.
- Failure to reply within the set or extended period for reply will, by statute, cause the application to become ABANDONED (35 U.S.C. § 133). Any reply received by the Office later than three months after the mailing date of this communication, even if timely filed, may reduce any earned patent term adjustment. See 37 CFR 1.704(b).

Status

1)☒ Responsive to communication(s) filed on *22 August 2006*.

2a)☒ This action is **FINAL**. 2b)☐ This action is non-final.

3)☐ Since this application is in condition for allowance except for formal matters, prosecution as to the merits is closed in accordance with the practice under *Ex parte Quayle*, 1935 C.D. 11, 453 O.G. 213.

Disposition of Claims

4)☒ Claim(s) *5,6,10,14,17,200,204,205,208-219 and 221-225* is/are pending in the application.

4a) Of the above claim(s) *220* is/are withdrawn from consideration.

5)☒ Claim(s) *219* is/are allowed.

6)☒ Claim(s) *5,6,10,14,17,200,204,208,209 and 214, 221, 223* is/are rejected.

7)☐ Claim(s) *205,210-213,215-218,222,224 and 225* is/are objected to.

8)☐ Claim(s) _____ are subject to restriction and/or election requirement.

Application Papers

9)☐ The specification is objected to by the Examiner.

10)☐ The drawing(s) filed on _____ is/are: a)☐ accepted or b)☐ objected to by the Examiner.

Applicant may not request that any objection to the drawing(s) be held in abeyance. See 37 CFR 1.85(a).

Replacement drawing sheet(s) including the correction is required if the drawing(s) is objected to. See 37 CFR 1.121(d).

11)☐ The oath or declaration is objected to by the Examiner. Note the attached Office Action or form PTO-152.

Priority under 35 U.S.C. § 119

12)☐ Acknowledgment is made of a claim for foreign priority under 35 U.S.C. § 119(a)-(d) or (f).

a)☐ All b)☐ Some * c)☐ None of:

1.☐ Certified copies of the priority documents have been received.

2.☐ Certified copies of the priority documents have been received in Application No. _____.

3.☐ Copies of the certified copies of the priority documents have been received in this National Stage application from the International Bureau (PCT Rule 17.2(a)).

* See the attached detailed Office action for a list of the certified copies not received.

Attachment(s)

1) ☒ Notice of References Cited (PTO-892)
2) ☐ Notice of Draftsperson's Patent Drawing Review (PTO-948)
3) ☐ Information Disclosure Statement(s) (PTO/SB/08) Paper No(s)/Mail Date _____.
4) ☐ Interview Summary (PTO-413) Paper No(s)/Mail Date. _____.
5) ☐ Notice of Informal Patent Application
6) ☐ Other: _____.

DETAILED ACTION

1. This Final Office Action is in response to the communication received August 22, 2006. Claims 5, 6, 10, 14, 17, 200, 204, 205, 208-219 and 221-225 are pending in the application.

Response to Arguments

2. Applicant's arguments with respect to claims 5, 6, 10, 14, 17, 200, 204, 205, 208-219 and 221-225 have been considered but are moot in view of the new ground(s) of rejection.

Applicant's amendment has overcome to the 35 USC 112 second rejection. The rejection is withdrawn. However, a new 35 USC 112 second rejection is rendered below based on the newly amended claims.

Claim Rejections - 35 USC § 112

3. The following is a quotation of the second paragraph of 35 U.S.C. 112:

> The specification shall conclude with one or more claims particularly pointing out and distinctly claiming the subject matter which the applicant regards as his invention.

4. Claim 5-6, 10, and 208 are rejected under 35 U.S.C. 112, second paragraph, as being indefinite for failing to particularly point out and distinctly claim the subject matter which applicant regards as the invention.

Claim 5 recites the limitation "said requesting party". It is unclear as what requesting party applicant is referring to. There is insufficient antecedent basis for this limitation in the claim.

Furthermore, claim 208 recited the phrase "the opportunity". It is unclear what the applicant means by said phrase. There is insufficient antecedent basis for this phrase in the claim.

Claims 6 and 10 depend from independent claim 5; therefore claims 6 and 10 are rejected under the same rationale relied upon of claim 1.

Claim Rejections - 35 USC § 103

5. The following is a quotation of 35 U.S.C. 103(a) which forms the basis for all obviousness rejections set forth in this Office action:

> (a) A patent may not be obtained though the invention is not identically disclosed or described as set forth in section 102 of this title, if the differences between the subject matter sought to be patented and the prior art are such that the subject matter as a whole would have been obvious at the time the invention was made to a person having ordinary skill in the art to which said subject matter pertains. Patentability shall not be negatived by the manner in which the invention was made.

6. Claims 5-8, 10-12, 14-15, 17, 198-200, 202-204, 209, 214, 221, and 223 are rejected under 35 U.S.C. 103(a) as being unpatentable over Walker et al "Walker" (U.S. Patent No. 5,884,270) in view of Pineda et al "Pineda" (Wo0182185A2) and further in view of Phatak (U.S. 2001/0042038).

As per claims 5, 7-8, 12, 17, 200, 202-204, 209, 214, 221, and 223, Walker discloses an interactive employment recruiting service comprising:

a processor, a memory connected to the processor (col. 8, lines 15-65);

automatically matching said candidate with said employer based on said candidate requirements and said employer requirements (col. 8, lines 20-37 and col. 8, lines 51-65), receiving a request for release of contact information from either said candidate or said employer

(col. 5, lines 5-18), determining whether there is mutual content to said request for the release of contact information regarding the candidate for each specific request. Since Walker teaches the control of requested data and authorization for releasing information, it implies that there must be mutual agreement between the parties before any information is released. Note col. 7, lines 24-41 and col. 21, line 58 through col. 22, line 9 of Walker.

Walker further teaches providing exchange information in real time (col. 7, lines 24-41 and col. 21, line 58 through col. 22 line 9).

Walker discloses all of the limitations above but fail to expressly disclose obligating payment due from said employer in real time and said payment due is a fee to a career site. Pinada in the same field of endeavor discloses the concept of charging a fee to an employer et al operator by a web site host (Page 3, lines 18-21). It would have been obvious to a person of ordinary skill in the art to modify the system of Walker to include the teachings of Pineda in order to generate revenue on the basis of the number of qualified candidates that employers actually find through of a job-placement web site.

Furthermore, the combination of Walker and Pinada teaches all of the limitations above, but g fails to explicitly disclose ... receiving a search request from either said candidate or said employer to search the searchable profile of one or more of the candidates and employer databases for a possible employment opportunity based upon certain parameters, and that the attributes of the requesting one of said candidate and *said employer satisfy the minimum requirements of a non-requesting candidate or employer stored in the candidate and employer databases. However,* Phatak discloses a method for conducting an auction for resources comprising a server for receiving candidate and employer and determining that the attributes of

the candidate and the employer satisfy minimum requirements. Note paragraphs 0035, 0044 and 0045 of Phatak. It would have been obvious to a person of ordinary skill in the art at the time the invention was made to have modified the disclosures of Walker and Pineda to include the teachings of Phatak in order to allow an employer to advertise the desired skills of the job candidate along with other attributes.

As per claim 6, Walker further discloses wherein said information exchange is the release of contact information (col. 7, lines 24-41 and col. 21, line 58 through col. 22, line 9). Walker does not state whether the exchange of information occurs prior or after any direct contact between the employer and the candidate which it implies that the information exchange occurs before any direct contact between the party.

As per claim 10, it is common that a company would pay a lot more to an employment firm to fill in an executive position and vary the pay amount based on the prospective employee's experience level, types of position, open position and fee schedules, etc. Applicant's claimed features "an amount of said payment is chosen from a general equivalency diploma amount, a high school amount, a vocational educational training amount, an associate degree amount, a bachelor degree amount, a master degree amount, and a doctorate amount, wherein said doctorate amount is less than or equal to said master degree amount, which is less than or equal to said bachelor degree amount, which is less than or equal to said associate degree amount, which is less than or equal to said vocational educational training amount, which is less than or equal to said high school amount, which is less than or equal to said general equivalency diploma amount" are similar type of features a company would pay for a candidate for the motivation of attracting more qualified candidates.

As per claim 11, claim 11 recites is a computer system, for coordinating information exchange between at least one candidate in a plurality of talent-contributors and at least one employer in a plurality of employers prior to any direct contact between said candidate and said employer, corresponding to method claim 1, and is rejected under 35 U.S.C 103 for the same reason set forth in claim 1.

As per claim 14, claim 14 recites a distributed network for facilitating interviews between at least one candidate in a plurality of talent-contributors and at least one employer in a plurality of employers, said candidate having candidate attributes including candidate requirements and said employer having requirements, corresponding to method claim 1, and is rejected under 35 U.S.C 103 for the same reason set forth in claim 1.

As per claim 15, the limitation of receiving payment from said employer for providing contact information for said candidate, has already been addressed in the rejection of claim 1. Note rejection of claim 1 above.

As per claim 198, claim 198 recites a method executed by a computer processor in a network computing environment for authorizing information exchange between at least one candidate of a plurality of talent-contributors and at least one of a plurality of employers prior to any direct contact between said candidate and said employer, said candidate having one or more candidate attributes including candidate requirements, and said employer having employer requirements, said candidate having one or more contact information items, corresponding to method claim 1, and is rejected under 35 U.S.C 103 for the same reason set forth in claim 1.

As per claim 199, claim 199 recites a method executed in a computing environment, for authorizing information exchange between at least one candidate of a plurality of talent-

contributors and at least one of a plurality of employers prior to any direct contact between said candidate and said employer, said candidate having one or more candidate attributes including candidate requirements, and said employer having employer requirements, corresponding to method claim 1, and is rejected under 35 U.S.C 103 for the same reason set forth in claim 1.

As per claim 205, the combination of Walker and Pineda fails to explicitly disclose if it is determined that either said employer or said candidate was previously requested to provide a response to a request for release of contact information and no response wad received, then such non-responding employer or candidate is precluded from further interaction with the system until said response is provided. It would have been obvious to a person of ordinary skill in the art to incorporate this feature into the disclosures of Walker and Pineda with the motivation to prevent an unauthorized candidate or employer from using the system.

As per claim 206, claim 206 recites a method utilized in a computer processor for authorizing information exchange between at least one candidate of a plurality of talent-contributors and at least one of a plurality of employers prior to any direct contact between said candidate and said employer, said candidate having one or more candidate attributes including candidate requirements, and said employer having employer requirements, corresponding to method claim 1, and is rejected under 35 U.S.C 103 for the same reason set forth in claim 1.

Allowable Subject Matter

7. Claims 205, 210-213, 215-218, 222, and 224-225 would be allowable if rewritten to include all of the limitations of the base claim and any intervening claims.

8. Claim 208 would be allowable if rewritten to overcome the rejection(s) under 35 U.S.C. 112, 2nd paragraph, set forth in this Office action and to include all of the limitations of the base claim and any intervening claims.

9. Claim 219 is allowed.

The following is a statement of reasons for the indication of allowable subject matter:

The closest prior art is to Walker (U.S. Patent No. 5,884,270), Pineda et al (Wo0182185A2), and Phatak (U.S. 2001/0042038). The combination of Walker, Pineda et al and Phatak fails to teach determining if either said employer or said candidate has not yet responded to a request for release of contact information and if it is determined that said employer or said candidate has not yet responded to a request for release for contact information, then precluding said employer or candidate from further interaction with the computer system until said response is provided as recited in independent claim 219.

Remarks

10. Applicant asserted that Walker et al and Pineda fails to teach the claimed invention. Applicant further supported his assertion by arguing that the Walker method and system allows the first and second parties to communicate directly with each other in an anonymous fashion. This is verified by the Examiner's cite to Walker, Column 21, Line 58 through Column 22, Line 9, and that *this is totally different from Applicant's invention wherein no direct contact between the candidate and the employer, or between the first and second party, occurs until after there has been an exchange of contact information in real time.* In response, the examiner respectfully disagrees because, it is noted that the features upon which applicant relies (i.e., first party and

second party) are not recited in the rejected claim(s). Although the claims are interpreted in light of the specification, limitations from the specification are not read into the claims. See *In re Van Geuns*, 988 F.2d 1181, 26 USPQ2d 1057 (Fed. Cir. 1993).

Applicant further argue that the Pineda'system ..... does not provide the feedback communication as clearly set forth in the various claims pending in the present application. In response, the examiner respectfully disagrees because, it is noted that the features upon which applicant relies (i.e., first party and second party) are not recited in the rejected claim(s). Although the claims are interpreted in light of the specification, limitations from the specification are not read into the claims. See *In re Van Geuns*, 988 F.2d 1181, 26 USPQ2d 1057 (Fed. Cir. 1993).

Conclusion

10. The prior art made of record and not relied upon is considered pertinent to applicant's disclosure.

a. Ritzel (U.S. Patent No. 6,904,407) teaches an Internet site which provides a list of references for a particular jobseeker to an inquiring employer or recruiter upon request **and upon paying of a fee.**

Applicant's amendment necessitated the new ground(s) of rejection presented in this Office action. Accordingly, **THIS ACTION IS MADE FINAL**. See MPEP § 706.07(a). Applicant is reminded of the extension of time policy as set forth in 37 CFR 1.136(a).

A shortened statutory period for reply to this final action is set to expire THREE MONTHS from the mailing date of this action. In the event a first reply is filed within TWO

MONTHS of the mailing date of this final action and the advisory action is not mailed until after the end of the THREE-MONTH shortened statutory period, then the shortened statutory period will expire on the date the advisory action is mailed, and any extension fee pursuant to 37 CFR 1.136(a) will be calculated from the mailing date of the advisory action. In no event, however, will the statutory period for reply expire later than SIX MONTHS from the date of this final action.

Any inquiry concerning this communication or earlier communications from the examiner should be directed to Romain Jeanty whose telephone number is (571) 272-6732. The examiner can normally be reached on Mon-Thurs 7:30 am to 6:00 pm.

If attempts to reach the examiner by telephone are unsuccessful, the examiner's supervisor, Tariq R. Hafiz can be reached on (571) 272-6729. The fax phone number for the organization where this application or proceeding is assigned is 571-273-8300.

Information regarding the status of an application may be obtained from the Patent Application Information Retrieval (PAIR) system. Status information for published applications may be obtained from either Private PAIR or Public PAIR. Status information for unpublished applications is available through Private PAIR only. For more information about the PAIR system, see http://pair-direct.uspto.gov. Should you have questions on access to the Private PAIR system, contact the Electronic Business Center (EBC) at 866-217-9197 (toll-free). If you would like assistance from a USPTO Customer Service Representative or access to the automated information system, call 800-786-9199 (IN USA OR CANADA) or 571-272-1000.

Romain Jeanty
Primary Examiner
Art Unit 3623
October 30, 2006

Notice of References Cited	Application/Control No. 10/101,644	Applicant(s)/Patent Under Reexamination VIANELLO, MARC	
	Examiner Romain Jeanty	Art Unit 3623	Page 1 of 1

U.S. PATENT DOCUMENTS

*		Document Number Country Code-Number-Kind Code	Date MM-YYYY	Name	Classification
*	A	US-2001/0042038	11-2001	Phatak, Anirudha	705/37
*	B	US-6,904,407	06-2005	Ritzel, William D.	705/1
	C	US-			
	D	US-			
	E	US-			
	F	US-			
	G	US-			
	H	US-			
	I	US-			
	J	US-			
	K	US-			
	L	US-			
	M	US-			

FOREIGN PATENT DOCUMENTS

*		Document Number Country Code-Number-Kind Code	Date MM-YYYY	Country	Name	Classification
	N					
	O					
	P					
	Q					
	R					
	S					
	T					

NON-PATENT DOCUMENTS

*		Include as applicable: Author, Title Date, Publisher, Edition or Volume, Pertinent Pages)
	U	
	V	
	W	
	X	

*A copy of this reference is not being furnished with this Office action. (See MPEP § 707.05(a).)
Dates in MM-YYYY format are publication dates. Classifications may be US or foreign.

DB=USPT; THES=DTIC; PLUR=YES; OP=OR

L11	information adj exchang$5 near5 authoriz$	35	L11
L10	L9 and authoriz$	21	L10
L9	exchang$ near5 contact adj information	95	L9
L8	exchang$ near5 contact adj information	95	L8
L7	L5 and export$	37	L7
L6	L5 nd export$	65149	L6
L5	L4 and access adj2 control	265	L5
L4	L2 and 705/51 52.ccls.	414	L4
L3	(access adj control or copy adj right$ or copy adj protection$) near5 export$	17	L3
L2	(access adj control or copy adj right$ or copy adj protection$)	27114	L2
L1	access adj control or copy adj right$ or copy adj protection$	27114	L1

Scanned Titles and abstract

END OF SEARCH HISTORY

IN THE UNITED STATES PATENT AND TRADEMARK OFFICE

Application of: Marc Vianello	:	Examiner: Romain Jeanty
Serial No.: 10/101,644	:	Group Art Unit: 3623
Filed: March 19, 2002	:	Attorney Docket No.: 15703.10002
For: APPARATUS AND METHODS FOR PROVIDING CAREER EMPLOYMENT SERVICES	:	Customer No.: 27128
Last Office Action: August 1, 2006	:	Confirmation No.: 8626

RESPONSE TO RESTRICTION REQUIREMENT

Commissioner for Patents
P.O. Box 1450
Alexandria, VA 22313-1450

Sir:

Responsive to the Restriction Requirement dated August 1, 2006, Applicant hereby elects for prosecution at this time the Group I claims, namely, claims 5, 6, 10, 14, 17, 200, 204, 205, 208-219 and 221-225, drawn to a method executed by a computer processor for authorizing information exchange between at least one of a plurality of candidates and at least one of a plurality of employers prior to any direct contact between said candidate and said employer, said candidate having one or more candidate attributes including candidate minimum requirements and said employer having one or more employer attributes including candidate minimum requirements, said one or more candidate attributes and minimum requirements including a searchable profile being stored in a candidate database, and said one or more employer attributes and minimum requirements including searchable profile being stored in an employer database.

The election of Group I claims is made without traverse, without prejudice to the elected Group I claims, and without prejudice to the non-elected Group II claims.

It is also respectfully pointed out to the Examiner that the Group II claim should be claim 220 instead of claim 20 as recited in the August 10, 2006 Office Action. Claim 20 was previously withdrawn and is dependent upon withdrawn independent claim 18. On the other hand, new claim 220 is directed to a method executed by a computer system for authorizing exchange between at least one of a plurality of candidates and at least one of a plurality of employers prior to any direct contact between said candidate and said employer. This recitation reads directly upon the preamble of new claim 220. As a result, Applicant respectfully requests that the August 1, 2006 Office Action be corrected to show that the Group II claim is, in fact, claim 220, not previously withdrawn claim 20.

Because Applicant may wish to pursue claim 220 of the non-elected Group II claims at a later date by Divisional Application, if necessary, it is requested that this non-elected claim as well as the other previously withdrawn non-elected claims, pursuant to 37 CFR 1.142, be permitted to remain in the application, but withdrawn from examination.

This response does not present any new matter. Accordingly, as all requirements of the Action have been complied with, an action on the merits and a Notice of Allowance of the elected claims are hereby respectfully requested.

If any issue regarding the allowability of any of the pending claims in the present application could be readily resolved, or if other action could be taken to further advance this application such as an Examiner's amendment, or if the Examiner should have any questions

Monster Worldwide, Inc. Exhibit 1010 (p.299/1328)

regarding the present amendment, it is respectfully requested that the Examiner please telephone Applicant's undersigned attorney in this regard.

Respectfully submitted,

Date: 22AUG06

Samuel Digirolamo
Reg. No. 29,915
Blackwell Sanders Peper Martin LLP
720 Olive Street, Suite 2400
St. Louis, MO 63101
314-345-6000
ATTORNEYS FOR APPLICANT

Monster Worldwide, Inc. Exhibit 1010 (p.300/1328)

Electronic Acknowledgement Receipt

EFS ID:	1166473
Application Number:	10101644
Confirmation Number:	8626
Title of Invention:	Apparatus and methods for providing career and employment services
First Named Inventor:	Marc Vianello
Customer Number:	27128
Filer:	Samuel Digirolamo/Jennifer Birmingham
Filer Authorized By:	Samuel Digirolamo
Attorney Docket Number:	15703.10002
Receipt Date:	22-AUG-2006
Filing Date:	19-MAR-2002
Time Stamp:	16:37:04
Application Type:	Utility
International Application Number:	

Payment information:

Submitted with Payment	no

File Listing:

Document Number	Document Description	File Name	File Size(Bytes)	Multi Part	Pages
1	Response to Election / Restriction Filed	10002restriction.pdf	350385	no	3

Warnings:	
Information:	
Total Files Size (in bytes):	350385

This Acknowledgement Receipt evidences receipt on the noted date by the USPTO of the indicated documents, characterized by the applicant, and including page counts, where applicable. It serves as evidence of receipt similar to a Post Card, as described in MPEP 503.

New Applications Under 35 U.S.C. 111
If a new application is being filed and the application includes the necessary components for a filing date (see 37 CFR 1.53(b)-(d) and MPEP 506), a Filing Receipt (37 CFR 1.54) will be issued in due course and the date shown on this Acknowledgement Receipt will establish the filing date of the application.

National Stage of an International Application under 35 U.S.C. 371
If a timely submission to enter the national stage of an international application is compliant with the conditions of 35 U.S.C. 371 and other applicable requirements a Form PCT/DO/EO/903 indicating acceptance of the application as a national stage submission under 35 U.S.C. 371 will be issued in addition to the Filing Receipt, in due course.

UNITED STATES PATENT AND TRADEMARK OFFICE

UNITED STATES DEPARTMENT OF COMMERCE
United States Patent and Trademark Office
Address: COMMISSIONER FOR PATENTS
P.O. Box 1450
Alexandria, Virginia 22313-1450
www.uspto.gov

APPLICATION NO.	FILING DATE	FIRST NAMED INVENTOR	ATTORNEY DOCKET NO.	CONFIRMATION NO.
10/101,644	03/19/2002	Marc Vianello	15703.10002	8626

27128 7590 08/01/2006

BLACKWELL SANDERS PEPER MARTIN LLP
720 OLIVE STREET
SUITE 2400
ST. LOUIS, MO 63101

EXAMINER	
JEANTY, ROMAIN	

ART UNIT	PAPER NUMBER
3623	

DATE MAILED: 08/01/2006

Please find below and/or attached an Office communication concerning this application or proceeding.

Office Action Summary	Application No.	Applicant(s)	
	10/101,644	VIANELLO, MARC	
	Examiner	Art Unit	
	Romain Jeanty	3623	

-- The MAILING DATE of this communication appears on the cover sheet with the correspondence address --

Period for Reply

A SHORTENED STATUTORY PERIOD FOR REPLY IS SET TO EXPIRE 1 MONTH(S) OR THIRTY (30) DAYS, WHICHEVER IS LONGER, FROM THE MAILING DATE OF THIS COMMUNICATION.

- Extensions of time may be available under the provisions of 37 CFR 1.136(a). In no event, however, may a reply be timely filed after SIX (6) MONTHS from the mailing date of this communication.
- If NO period for reply is specified above, the maximum statutory period will apply and will expire SIX (6) MONTHS from the mailing date of this communication.
- Failure to reply within the set or extended period for reply will, by statute, cause the application to become ABANDONED (35 U.S.C. § 133). Any reply received by the Office later than three months after the mailing date of this communication, even if timely filed, may reduce any earned patent term adjustment. See 37 CFR 1.704(b).

Status

1)☒ Responsive to communication(s) filed on *20 April 2006*.

2a)☐ This action is **FINAL**. 2b)☐ This action is non-final.

3)☐ Since this application is in condition for allowance except for formal matters, prosecution as to the merits is closed in accordance with the practice under *Ex parte Quayle*, 1935 C.D. 11, 453 O.G. 213.

Disposition of Claims

4)☒ Claim(s) *5,6,10,14,17,200,204,205,208-219 and 221-225* is/are pending in the application.

4a) Of the above claim(s) _____ is/are withdrawn from consideration.

5)☐ Claim(s) _____ is/are allowed.

6)☐ Claim(s) _____ is/are rejected.

7)☐ Claim(s) _____ is/are objected to.

8)☐ Claim(s) *See Continuation Sheet* are subject to restriction and/or election requirement.

Application Papers

9)☐ The specification is objected to by the Examiner.

10)☐ The drawing(s) filed on _____ is/are: a)☐ accepted or b)☐ objected to by the Examiner.

Applicant may not request that any objection to the drawing(s) be held in abeyance. See 37 CFR 1.85(a).

Replacement drawing sheet(s) including the correction is required if the drawing(s) is objected to. See 37 CFR 1.121(d).

11)☐ The oath or declaration is objected to by the Examiner. Note the attached Office Action or form PTO-152.

Priority under 35 U.S.C. § 119

12)☐ Acknowledgment is made of a claim for foreign priority under 35 U.S.C. § 119(a)-(d) or (f).

a)☐ All b)☐ Some * c)☐ None of:

1.☐ Certified copies of the priority documents have been received.

2.☐ Certified copies of the priority documents have been received in Application No. _____.

3.☐ Copies of the certified copies of the priority documents have been received in this National Stage application from the International Bureau (PCT Rule 17.2(a)).

* See the attached detailed Office action for a list of the certified copies not received.

Attachment(s)

1) ☐ Notice of References Cited (PTO-892)
2) ☐ Notice of Draftsperson's Patent Drawing Review (PTO-948)
3) ☐ Information Disclosure Statement(s) (PTO-1449 or PTO/SB/08) Paper No(s)/Mail Date _____.
4) ☐ Interview Summary (PTO-413) Paper No(s)/Mail Date. _____ .
5) ☐ Notice of Informal Patent Application (PTO-152)
6) ☐ Other: _____.

Continuation of Disposition of Claims: Claims subject to restriction and/or election requirement are 5,6,10,14,17,200,204,205,208-219 and 221-225.

Monster Worldwide, Inc. Exhibit 1010 (p.305/1328)

DETAILED ACTION

1. This Office action is in response to the communication received on April 20, 2006. Claims 5-6, 10, 14, 17, 200, 204-205, and 208-220-225 are pending in the application.

Election/Restrictions

2. Restriction to one of the following inventions is required under 35 U.S.C. 121:

I. Claims 5-6, 10, 14, 17, 200, 204-205, 208-219, and 221-225 drawn to a method executed by a computer processor, for authorizing information exchange between at least one of a plurality of candidates and at least one of a plurality of employers prior to any direct contact between said candidate and said employer, said candidate having one or more candidate attributes including candidate minimum requirements and said employer having one or more employer attributes including candidate minimum requirements, said one or more candidate attributes and minimum requirements including a searchable profile being stored in a candidate database, and said one or more employer attributes and minimum requirements including searchable profile being stored in an employer database, classified in class 705, subclass 7.

II. Claim 20, drawn to a s method executed by a computer system for authorizing exchange between at least one of a plurality of candidates and

at least of a plurality of employers prior to any direct contact between said candidate and said employer, classified in class 705, subclass 7.

3. The inventions are distinct, each from the other because of the following reasons:

4. Invention of groups I and II, are related as subcombinations disclosed as usable together in a single combination. The subcombinations are distinct from each other if they are shown to be separately usable. In the instant case, invention II has separate utility such as declining reasons why said candidate or said employer declined the request for release of the contact information. See MPEP § 806.05(d).

5. Because these inventions are distinct for the reasons given above and the search required for Group I is not required for Groups II, restriction for examination purposes as indicated is proper.

6. Since the restriction is so complex and the examiner knows from previous experience that en election will not be made by telephone, this rejection is proper under MPEP 812.01.

7. Applicant is reminded that upon the cancellation of claims to a non-elected invention, the inventorship must be amended in compliance with 37 CFR 1.48(b) if one or more of the currently named inventors is no longer an inventor of at least one claim remaining in the application. Any amendment of inventorship must be accompanied by a request under 37 CFR 1.48(b) and by the fee required under 37 CFR 1.17(i).

Any inquiry concerning this communication or earlier communications from the examiner should be directed to Romain Jeanty whose telephone number is (571) 272-6732. The examiner can normally be reached on Mon-Thurs 7:30 a.m. to 6:00 p.m..

If attempts to reach the examiner by telephone are unsuccessful, the examiner's supervisor, Tariq R. Hafiz can be reached on (571) 272-6729. The fax phone number for the organization where this application or proceeding is assigned is 571-273-8300.

Information regarding the status of an application may be obtained from the Patent Application Information Retrieval (PAIR) system. Status information for published applications may be obtained from either Private PAIR or Public PAIR. Status information for unpublished applications is available through Private PAIR only. For more information about the PAIR system, see http://pair-direct.uspto.gov. Should you have questions on access to the Private PAIR system, contact the Electronic Business Center (EBC) at 866-217-9197 (toll-free). If you would like assistance from a USPTO Customer Service Representative or access to the automated information system, call 800-786-9199 (IN USA OR CANADA) or 571-272-1000.

June 25, 2006

Romain Jeanty
Primary Examiner
Art Unit 3623

Index of Claims

Application/Control No.	Applicant(s)/Patent under Reexamination
10/101,644	VIANELLO, MARC
Examiner	**Art Unit**
Romain Jeanty	3623

√	Rejected	–	(Through numeral) Cancelled	N	Non-Elected	A	Appeal
=	Allowed	÷	Restricted	I	Interference	O	Objected

Claim		Date								
Final	Original	6/25/06								
	1	-								
	2	-								
	3	-								
	4	-								
	5	+								
	6	+								
	7	-								
	8	-								
	9	-								
	10	+								
	11	-								
	12	-								
	13	-								
	14	+								
	15	-								
	16	-								
	17	+								
	18	-								
	19	-								
	20	-								
	21	-								
	22	-								
	23	-								
	24	-								
	25	-								
	26	-								
	27	-								
	28	-								
	29	-								
	30	-								
	31	-								
	32	-								
	33	-								
	34	-								
	35	-								
	36	-								
	37	-								
	38	-								
	39	-								
	40	-								
	41	-								
	42	-								
	43	-								
	44	-								
	45	-								
	46	-								
	47	-								
	48	-								
	49	-								
	50	-								

Claim		Date								
Final	Original	6/25/06								
	51	-								
	52	-								
	53	-								
	54	-								
	55	-								
	56	-								
	57	-								
	58	-								
	59	-								
	60	-								
	61	-								
	62	-								
	63	-								
	64	-								
	65	-								
	66	-								
	67	-								
	68	-								
	69	-								
	70	-								
	71	-								
	72	-								
	73	-								
	74	-								
	75	-								
	76	-								
	77	-								
	78	-								
	79	-								
	80	-								
	81	-								
	82	-								
	83	-								
	84	-								
	85	-								
	86	-								
	87	-								
	88	-								
	89	-								
	90	-								
	91	-								
	92	-								
	93	-								
	94	-								
	95	-								
	96	-								
	97	-								
	98	-								
	99	-								
	100	-								

Claim		Date								
Final	Original	6/25/06								
	101	-								
	102	-								
	103	-								
	104	-								
	105	-								
	106	-								
	107	-								
	108	-								
	109	-								
	110	-								
	111	-								
	112	-								
	113	-								
	114	-								
	115	-								
	116	-								
	117	-								
	118	-								
	119	-								
	120	-								
	121	-								
	122	-								
	123	-								
	124	-								
	125	-								
	126	-								
	127	-								
	128	-								
	129	-								
	130	-								
	131	-								
	132	-								
	133	-								
	134	-								
	135	-								
	136	-								
	137	-								
	138	-								
	139	-								
	140	-								
	141	-								
	142	-								
	143	-								
	144	-								
	145	-								
	146	-								
	147	-								
	148	-								
	149	-								
	150	-								

Index of Claims (continued)

Application/Control No.	Applicant(s)/Patent under Reexamination
10/101,644	VIANELLO, MARC
Examiner	**Art Unit**
Romain Jeanty	3623

√	Rejected	–	(Through numeral) Cancelled	N	Non-Elected	A	Appeal
=	Allowed	÷	Restricted	I	Interference	O	Objected

Claim		Date								
Final	Original	6/25/06								
	151	-								
	152	-								
	153	-								
	154	-								
	155	-								
	156	-								
	157	-								
	158	-								
	159	-								
	160	-								
	161	-								
	162	-								
	163	-								
	164	-								
	165	-								
	166	-								
	167	-								
	168	-								
	169	-								
	170	-								
	171	-								
	172	-								
	173	-								
	174	-								
	175	-								
	176	-								
	177	-								
	178	-								
	179	-								
	180	-								
	181	-								
	182	-								
	183	-								
	184	-								
	185	-								
	186	-								
	187	-								
	188	-								
	189	-								
	190	-								
	191	-								
	192	-								
	193	-								
	194	-								
	195	-								
	196	-								
	197	-								
	198	-								
	199	-								
	200	+								

Claim		Date								
Final	Original	6/25/06								
	201	-								
	202	-								
	203	-								
	204	+								
	205	+								
	206	-								
	207	-								
	208	+								
	209	+								
	210	+								
	211	+								
	212	+								
	213	+								
	214	+								
	215	+								
	216	+								
	217	+								
	218	+								
	219	+								
	220	+								
	221	+								
	222	+								
	223	+								
	224	+								
	225	+								
	226									
	227									
	228									
	229									
	230									
	231									
	232									
	233									
	234									
	235									
	236									
	237									
	238									
	239									
	240									
	241									
	242									
	243									
	244									
	245									
	246									
	247									
	248									
	249									
	250									

Claim		Date								
Final	Original									
	251									
	252									
	253									
	254									
	255									
	256									
	257									
	258									
	259									
	260									
	261									
	262									
	263									
	264									
	265									
	266									
	267									
	268									
	269									
	270									
	271									
	272									
	273									
	274									
	275									
	276									
	277									
	278									
	279									
	280									
	281									
	282									
	283									
	284									
	285									
	286									
	287									
	288									
	289									
	290									
	291									
	292									
	293									
	294									
	295									
	296									
	297									
	298									
	299									
	300									

11

PATENT APPLICATION FEE DETERMINATION RECORD
Effective December 8, 2004

10/101644

CLAIMS AS FILED - PART I

	(Column 1)	(Column 2)
TOTAL CLAIMS		
FOR	NUMBER FILED	NUMBER EXTRA
TOTAL CHARGEABLE CLAIMS	minus 20=	*
INDEPENDENT CLAIMS	minus 3 =	*
MULTIPLE DEPENDENT CLAIM PRESENT		☐

* If the difference in column 1 is less than zero, enter "0" in column 2

SMALL ENTITY TYPE ☐		OR	OTHER THAN SMALL ENTITY	
RATE	FEE		RATE	FEE
BASIC FEE	150.00	OR	BASIC FEE	300.00
X$ 25=		OR	X$50=	
X100=		OR	X200=	
+180=		OR	+360=	
TOTAL		OR	TOTAL	

CLAIMS AS AMENDED - PART II

AMENDMENT A

	(Column 1) CLAIMS REMAINING AFTER AMENDMENT		(Column 2) HIGHEST NUMBER PREVIOUSLY PAID FOR	(Column 3) PRESENT EXTRA
Total	* 197	Minus	** 197	=
Independent	* 31	Minus	*** 31	= 1
FIRST PRESENTATION OF MULTIPLE DEPENDENT CLAIM				☐

SMALL ENTITY		OR	OTHER THAN SMALL ENTITY	
RATE	ADDITIONAL FEE		RATE	ADDITIONAL FEE
X$ 25=		OR	X$50=	1
X100=	1	OR	X200=	1
+180=		OR	+360=	
TOTAL ADDIT. FEE		OR	TOTAL ADDIT. FEE	

DN 4/4

9/2/05

AMENDMENT B

	(Column 1) CLAIMS REMAINING AFTER AMENDMENT		(Column 2) HIGHEST NUMBER PREVIOUSLY PAID FOR	(Column 3) PRESENT EXTRA
Total	* 196	Minus	** 197	=
Independent	* 31	Minus	*** 31	=
FIRST PRESENTATION OF MULTIPLE DEPENDENT CLAIM				☐

RATE	ADDITIONAL FEE		RATE	ADDITIONAL FEE
X$ 25=		OR	X$50=	
X100=		OR	X200=	
+180=		OR	+360=	
TOTAL ADDIT. FEE		OR	TOTAL ADDIT. FEE	

1/20/06

AMENDMENT C

	(Column 1) CLAIMS REMAINING AFTER AMENDMENT		(Column 2) HIGHEST NUMBER PREVIOUSLY PAID FOR	(Column 3) PRESENT EXTRA
Total	* 210	Minus	** 210	=
Independent	* 35	Minus	*** 35	=
FIRST PRESENTATION OF MULTIPLE DEPENDENT CLAIM				☐

RATE	ADDITIONAL FEE		RATE	ADDITIONAL FEE
X$ 25=		OR	X$50=	
X100=		OR	X200=	
+180=		OR	+360=	

IN THE UNITED STATES PATENT AND TRADEMARK OFFICE

Application of: Marc Vianello	:	Examiner: Romain Jeanty
Serial No.: 10/101,644	:	Group Art Unit: 3623
Filed: March 19, 2002	:	Attorney Docket No.: 15703.10002
For: APPARATUS AND METHODS FOR PROVIDING CAREER EMPLOYMENT SERVICES	:	Customer No.: 027128
	:	Confirmation No.: 8626
Last Office Action: April 12, 2006	:	

SUPPLEMENTAL AMENDMENT F

Mail Stop Amendment
Commissioner for Patents
P.O. Box 1450
Alexandria, VA 22313-1450

Sir:

This is a **Supplemental Amendment** to the previously filed Amendment F, which was filed January 23, 2006. This Supplemental Amendment is being filed in response to the Notice of Non-Compliant Amendment mailed April 12, 2006.

Amendments to the Claims are reflected in the listing of claims which begin on page 2 of this document.

Remarks/Arguments begin on page 52 of this document

Monster Worldwide, Inc. Exhibit 1010 (p.312/1328)

AMENDMENTS TO THE CLAIMS:

This listing of claims will replace all prior revisions, and listings, of claims in the application.

Listing of Claims:

1. (Withdrawn) A system for collecting and classifying information using a structured information format, said system comprising:

an employment management system configured to provide continuous recruiting and continuous career enhancement by providing a search interface to a plurality of job descriptions and to a plurality of blind resumés, wherein employers provide said job descriptions and talent provide talent information corresponding to said blind resumés.

2. (Withdrawn) The system as set forth in claim 1, wherein personal contact information corresponding to at least one selected resumé is provided to said employers after said employers agree to purchase said personal contact information.

3. (Withdrawn) The system as set forth in claim 1, wherein said employers are provided an opportunity to purchase personal contact information corresponding to at least one selected resumé if a selected talent corresponding to said selected resumé indicates consent.

4. (Withdrawn) The system as set forth in claim 3, wherein said consent is indicated by specifying at least one preferred employer.

5. (Currently Amended) A method executed by a computer processor~~,~~ for authorizing information exchange between at least one ~~candidate~~ of a plurality of ~~talent-contributors~~ candidates and at least one of a plurality of employers prior to any direct contact between said candidate and said employer, said candidate having one or more candidate attributes including candidate minimum requirements, ~~and~~ said employer having one or more employer attributes including employer minimum requirements, said one or more candidate attributes and minimum requirements including a searchable profile being stored in a candidate database, and said one or more employer attributes and minimum requirements including a searchable profile being stored in an employer database, said method comprising:

Monster Worldwide, Inc. Exhibit 1010 (p.313/1328)

~~programmatically matching said candidate with said employer based on said candidate requirements and said employer requirements;~~

receiving a search request from either said candidate or said employer to search the searchable profile of one of the candidate and employer databases for a possible employment opportunity based upon certain search parameters;

processing the search request and providing the results to the requesting one of said candidate and said employer;

receiving ~~a~~ at least one request for release of contact information from ~~either~~ the requesting one of said candidate ~~or~~ and said employer based upon the search results;

determining that the attributes of the requesting one of said ~~whether there is mutual consent for the release of contact information regarding the~~ candidate ~~for each specific request~~ and said employer satisfy the minimum requirements of a non-requesting candidate or employer stored in the candidate and employer databases;

receiving a response from said non-requesting candidate or employer consenting to the release of the contact information of said candidate or said employer to said requesting party;

obligating a payment due ~~from said employer~~ in real time based on the ~~mutual consent~~ response to said request for release of contact information ~~for each specific request~~ wherein said payment due is a fee to a career site operator; and

providing exchange of contact information in real time prior to any direct contact between said candidate and said employer.

6. (Previously Presented) The method as set forth in claim 5, wherein said information exchange is the release of contact information, prior to any direct contact between the parties.

7. (Cancelled)

8. (Cancelled)

Monster Worldwide, Inc. Exhibit 1010 (p.314/1328)

9. (Cancelled).

10. (Previously Presented) The method as set forth in claim 5, wherein an amount of said obligation is chosen from a general equivalency diploma amount, a high school amount, a vocational educational training amount, an associate degree amount, a bachelor degree amount, a master degree amount, and a doctorate amount, wherein said doctorate amount is greater than or equal to said master degree amount, which is greater than or equal to said bachelor degree amount, which is greater than or equal to said associate degree amount, which is greater than or equal to said vocational educational training amount, which is greater than or equal to said high school amount, which is greater than or equal to said general equivalency diploma amount.

11. (Cancelled)

12. (Cancelled)

13. (Cancelled)

14. (Currently Amended) A distributed network for facilitating the exchange of contact information between at least one of ~~candidate in~~ a plurality of ~~talent contributors~~ candidates and at least one ~~employer in~~ of a plurality of employers, said candidate having one or more candidate attributes including candidate minimum requirements, and said employer having one or more employer attributes including employer minimum requirements, said distributed network comprising:

means for managing enterprise database resources;

means for storing the candidate attributes and requirements in a candidate database and providing at least a portion of the candidate database to be searched by said candidate and said employer;

means for storing the employer attributes and requirements in an employer database and providing at least a portion of the employer database to be searched by said candidate and said employer;

Monster Worldwide, Inc. Exhibit 1010 (p.315/1328)

means for receiving a search request from either said candidate or said employer to search the searchable portion of one of the candidate and employer databases for a possible employment opportunity based upon certain search parameters;

means for processing the search request and providing the results thereof to the requesting one of said candidate and said employer;

~~means for matching said candidate with said employer based on said candidate requirements and said employer requirements;~~

means for receiving a request for release of contact information from ~~either~~ the requesting one of said candidate ~~or~~ and said employer based upon the search results;

means for determining that the attributes of the requesting one of said candidate and said employer satisfy the minimum requirements of a non-requesting candidate or employer;

means for determining ~~whether~~ that there is mutual consent ~~to said request~~ for release of contact information ~~for each specific request prior to any direct contact between said~~ regarding the candidate ~~and said employer~~; ~~and~~

means for computing a payment fee to the career site operator ~~from said employer~~ in real time based on the mutual consent ~~to said request~~ for the release of contact information ~~for each specific request.~~;

means for obligating the payment fee in real time to the career site operator;

means for collecting said payment fee in real time; and

means for providing the exchange of contact information in real time prior to any direct contact between said candidate and said employer.

15. (Cancelled)

16. (Cancelled).

Monster Worldwide, Inc. Exhibit 1010 (p.316/1328)

17. (Currently Amended) The distributed network as recited in claim 14~~,~~ wherein said means for determining ~~whether~~ that there is mutual consent further comprises means for receiving a response to said request for release of contact information from the non requesting one of said candidate and said employer.

18. (Withdrawn) A method of receiving information regarding at least one candidate from a plurality of talent-contributors, said candidate having candidate attributes, said method comprising:

receiving personal information associated with said candidate;

receiving experience information regarding said candidate, said experience information relating to skills attributes; and

receiving skills descriptions corresponding to said skills attributes.

19. (Withdrawn) The method as set forth in claim 18, wherein said receiving personal information further comprises maintaining records of said personal information.

20. (Withdrawn) The method as set forth in claim 18, wherein said personal information includes a name, a physical address, an electronic address, and a minimum compensation requirement of said candidate.

21. (Withdrawn) The method as set forth in claim 20, wherein said physical address is maintained in a consistent format.

22. (Withdrawn) The method as set forth in claim 20 further comprising identifying a nearest metropolitan area to said physical address, wherein said nearest metropolitan area is further designated as a metropolitan statistical area, a primary metropolitan statistical area, or a consolidated metropolitan statistical area.

23. (Withdrawn) The method as set forth in claim 18, wherein said candidate attributes include career information regarding at least one past position of said candidate, said career information selected from structured occupational data operable to be matched with employer information pertaining to prospective employers.

Monster Worldwide, Inc. Exhibit 1010 (p.317/1328)

24. (Withdrawn) The method as set forth in claim 23, wherein said structured occupational data includes at least one occupational title obtained from the Dictionary of Occupational Titles.

25. (Withdrawn) The method as set forth in claim 23, wherein said structured occupational data further comprises a reason said candidate is no longer employed in said past position.

26. (Withdrawn) The method as set forth in claim 23, wherein said candidate attributes include industry information regarding said past position of said candidate, said career information selected from structured industry data operable to be matched with said employer information.

27. (Withdrawn) The method as set forth in claim 26, wherein said industry information further comprises a reason said candidate is no longer employed in said past position.

28. (Withdrawn) The method as set forth in claim 18, wherein said candidate attributes include structured industry data comprising classifications identified in the North American Industry Classification System.

29. (Withdrawn) The method as set forth in claim 28, wherein said classifications relate to at least one past position of said candidate.

30. (Withdrawn) The method as set forth in claim 29, wherein said candidate provides descriptions of accomplishments of said candidate in said past position.

31. (Withdrawn) The method as set forth in claim 18 further comprising:

storing said personal information about said candidate in a memory; and

providing access to said candidate attributes, said access operable to facilitate generation of reports regarding said plurality of talent-contributors.

32. (Withdrawn) The method as set forth in claim 23, wherein said candidate provides information regarding compensation received by said candidate with respect to said past position.

33. (Withdrawn) The method as set forth in claim 31, wherein said personal information further comprises self-identification information including at least one of:

Monster Worldwide, Inc. Exhibit 1010 (p.318/1328)

race-information regarding said candidate;

gender-information regarding said candidate;

citizenship-information regarding said candidate; and

lawful eligibility to work in at least one country.

34. (Withdrawn) The method as set forth in claim 33, wherein said self-identification information is received on an optional basis.

35. (Withdrawn) The method as set forth in claim 33 further comprising providing said self-identification information to prospective employers to enable said prospective employers to comply with job-applicant-reporting requirements.

36. (Withdrawn) The method as set forth in claim 18 further comprising receiving educational-background information associated with at least one educational institution which said candidate has attended.

37. (Withdrawn) The method as set forth in claim 36, wherein said educational information further comprises a name of said educational institution, a level of education expected or attained, and at least one field of study.

38. (Withdrawn) The method as set forth in claim 18 further comprising receiving affiliation information corresponding to affiliations of said candidate, said affiliations including membership in at least one organization in a plurality of occupation-oriented organizations.

39. (Withdrawn) The method as set forth in claim 38, wherein said occupation-oriented organizations comprise professional associations, trade associations, and labor unions.

40. (Withdrawn) The method as set forth in claim 18, wherein said candidate attributes include desired-career information regarding at least one desired-career position.

41. (Withdrawn) The method as set forth in claim 40, wherein said desired-career information includes a designation of at least one preferred employer.

Monster Worldwide, Inc. Exhibit 1010 (p.319/1328)

42. (Withdrawn) The method as set forth in claim 18 further comprising suggesting possible job descriptions to said candidate based on said candidate attributes.

43. (Withdrawn) The method as set forth in claim 18, wherein said skills descriptions relate to language skills, analytical skills, people and communication skills, and mechanical skills of said candidate.

44. (Withdrawn) The method as set forth in claim 43, wherein said language skills include reading, writing, and speaking.

45. (Withdrawn) The method as set forth in claim 44, wherein said description of said reading, writing, and speaking skills includes an assessment of proficiency in said skills.

46. (Withdrawn) The method as set forth in claim 43, wherein said analytical skills, people and communication skills, and mechanical skills correspond to said skills attributes described in the Dictionary of Occupational Titles.

47. (Withdrawn) The method as set forth in claim 46, wherein said skills descriptions comprise descriptions of nature, use, and proficiency of skills associated with said skills descriptions.

48. (Withdrawn) The method as set forth in claim 46, wherein skills associated with said skills descriptions correspond to a skills coding system of the Dictionary of Occupational Titles.

49. (Withdrawn) The method as set forth in claim 18 further comprising receiving an identification of licenses and certifications held by said candidate.

50. (Withdrawn) The method as set forth in claim 18 further comprising receiving a description of professional and personal accomplishments of said candidate.

51. (Withdrawn) The method as set forth in claim 18 further comprising receiving an indication of an interest level of said candidate in obtaining new employment.

52. (Withdrawn) A computer system including computer-readable instructions for receiving talent information regarding talent, said talent having talent faculties, said computer system comprising:

Monster Worldwide, Inc. Exhibit 1010 (p.320/1328)

at least one memory in which said computer-readable instructions reside;

a processor operable to execute said computer-readable instructions;

a communications adapter operable to receive said talent information from said talent, said communications adapter operative to communicate a portion of said talent information to a plurality of employers;

wherein said communications adapter is configured to receive contact data associated with said talent; and

wherein said communications adapter is further configured to receive background information regarding said talent, said background information including affiliation information corresponding to affiliations of said talent, said affiliations including membership in at least one occupation-oriented organization.

53. (Withdrawn) The computer system as set forth in claim 52, wherein said contact data includes a name and an E-mail address.

54. (Withdrawn) The computer system as set forth in claim 52, wherein said background information further comprises self-identification information including at least one of:

information regarding race of said talent;

information regarding gender of said talent;

information regarding citizenship of said talent; and

information regarding employment eligibility.

55. (Withdrawn) The computer system as set forth in claim 54 further comprising a data interface configured to provide said self-identification information to said employers to enable said employers to comply with job applicant reporting requirements.

56. (Withdrawn) The computer system as set forth in claim 52, wherein said talent faculties further comprise information regarding at least one of past employment, formal education, informal training, and a description of proficiency in a predetermined set of skills.

Monster Worldwide, Inc. Exhibit 1010 (p.321/1328)

57. (Withdrawn) The computer system as set forth in claim 52, wherein said talent faculties further comprise information regarding membership in at least one occupation-oriented organization.

58. (Withdrawn) The computer system as set forth in claim 52, wherein said communications adapter is further configured to receive desired-position information regarding a career position specified by said talent.

59. (Withdrawn) The computer system as set forth in claim 58, wherein said desired-position information includes a designation of at least one preferred employer.

60. (Withdrawn) The computer system as set forth in claim 52, wherein said talent faculties include work experience as embodied in past-employment information, said past-employment information associated with skills attributes, said skills attributes described by skills descriptions.

61. (Withdrawn) The computer system as set forth in claim 60, wherein said skills descriptions include an assessment of proficiency.

62. (Withdrawn) A distributed network for providing employers with candidate-information regarding at least one candidate in a plurality of talent-contributors, said candidate having candidate attributes, said distributed network comprising:

means for managing enterprise human resource data;

means for receiving personal information associated with said candidate;

means for receiving career information regarding at least one past career position of said candidate, said career information operable to be matched with employer information pertaining to prospective employers of said candidate, wherein at least a portion of said career information as associated with said enterprise human resource data;

means for receiving experience information regarding said candidate, said experience information associated with experiences gained by said candidate, said experiences relating to skills attributes and said experiences of relevance to said prospective employers;

Monster Worldwide, Inc. Exhibit 1010 (p.322/1328)

means for obtaining consent of said candidate to release of said personal information of said candidate to at least one of said prospective employers; and

means for providing said personal information to said at least one of said prospective employers based on said consent.

63. (Withdrawn) The distributed network as recited in claim 62 further comprising means for providing an interface to said candidate attributes, said interface operable to facilitate generation of reports regarding said plurality of talent-contributors.

64. (Withdrawn) The distributed network as recited in claim 63, wherein said personal information further comprises self-identification information including at least one of: information regarding race of said candidate;

information regarding gender of said candidate;

information regarding citizenship of said candidate; and

lawful eligibility to work in at least one country.

65. (Withdrawn) The method according to claim 64, wherein said self-identification information is received on an optional basis.

66. (Withdrawn) The distributed network as recited in claim 64 further comprising means for providing said self-identification information to said prospective employers to enable said prospective employers to comply with job applicant reporting requirements, wherein said self-identification information is provided to said prospective employers after said prospective employers have made hiring decisions regarding said candidate, whereby said self-identification information cannot be used impermissibly by said prospective employers to discriminate against said candidate.

67. (Withdrawn) The distributed network as recited in claim 62 wherein said experience information is categorized based on a data dictionary of job descriptions.

68. (Withdrawn) The distributed network as recited in claim 62, wherein said candidate attributes include at least one desired career position.

Monster Worldwide, Inc. Exhibit 1010 (p.323/1328)

69. (Withdrawn) The distributed network as recited in claim 62, wherein said candidate attributes further include a designation of at least one preferred employer.

70. (Withdrawn) A method of receiving information regarding an employer including employer profile information and at least one job description, said job description having job parameters corresponding to candidate attributes of a desired candidate, said method comprising:

receiving desired experience information regarding said desired candidate, said desired experience information relating to a structured set of desired skills attributes; and

receiving desired skills descriptions corresponding to said desired skills attributes.

71. (Withdrawn) The method as set forth in claim 70 further comprising:

receiving a multiple-division indication regarding an existence of multiple divisions associated with said employer;

receiving geographical information associated with at least one of said multiple divisions;

receiving user information regarding at least one employer-user to be associated with an employer account corresponding to said employer; and

for each of said at least one employer-user receiving access scope information, said access scope information specifying a scope of access associated with said at least one employer-user.

72. (Withdrawn) The method as set forth in claim 71, wherein a division in said multiple divisions is further divided into successively smaller divisions.

73. (Withdrawn) The method as set forth in claim 70, wherein said employer profile information includes employer name, phone number, physical address, billing information, and administrative user information.

Monster Worldwide, Inc. Exhibit 1010 (p.324/1328)

74. (Withdrawn) The method as set forth in claim 71, wherein said geographical information is maintained in a consistent format.

75. (Withdrawn) The method as set forth in claim 71, wherein receiving said geographical information further comprises identifying a nearest metropolitan area associated with a geographical location associated with said multiple divisions of said employer, wherein said nearest metropolitan area is further designated as a metropolitan statistical area, a primary metropolitan statistical area, or a consolidated metropolitan statistical area.

76. (Withdrawn) The method as set forth in claim 71, wherein said job description is associated with a division within said multiple divisions.

77. (Withdrawn) The method as set forth in claim 70, wherein said job description further comprises:

a confidential maximum compensation said employer has allocated for a job;

a number of total employment positions associated with said job description; and

a number of open employment positions associated with said number of total employment positions.

78. (Withdrawn) The method as set forth in claim 70, wherein said employer profile information includes structured industry data operable to be matched with career information pertaining to prospective employees.

79. (Withdrawn) The method as set forth in claim 78, wherein said structured industry data includes classifications identified in the North American Industry Classification System.

80. (Withdrawn) The method as set forth in claim 70, wherein said job description further comprises:

a Federal Employment Records Information requirement indication regarding whether said job description is associated with an employment position for which self-identification information should be maintained.

Monster Worldwide, Inc. Exhibit 1010 (p.325/1328)

81. (Withdrawn) The method as set forth in claim 70, wherein said job description further comprises a regulated job requirement indication regarding whether said job description is associated with an employment position for which said candidate attributes are subject to government regulation.

82. (Withdrawn) The method as set forth in claim 70, wherein said job description further comprises a narrative description of functions to be performed in a job associated with said job description.

83. (Withdrawn) The method as set forth in claim 70, wherein said job description further comprises benefit descriptions and compensation figures offered by said employer in connection with a job associated with said job description, wherein said compensation figures include a maximum compensation amount.

84. (Withdrawn) The method as set forth in claim 83, wherein said maximum compensation amount is confidential.

85. (Withdrawn) The method as set forth in claim 81, wherein said government regulation includes a restriction pertaining to citizenship.

86. (Withdrawn) The method as set forth in claim 71, wherein said employer profile information includes information regarding organizations with which said employer is affiliated.

87. (Withdrawn) A computer system for receiving employer information regarding an employer having at least one division, said computer system comprising:

a check box operable to receive a multiple-division indication regarding an existence of multiple divisions associated with said employer;

a geographical interface configured to receive geographical information associated with at least one of said multiple divisions associated with said employer; and

a user interface operable to receive user information regarding at least one employer-user to be associated with an employer account corresponding to said employer, wherein said user interface is operable to receive access scope information for

Monster Worldwide, Inc. Exhibit 1010 (p.326/1328)

said employer-user, said access scope information specifying a scope of access associated with said employer-user.

88. (Withdrawn) The computer system as set forth in claim 87, wherein said geographical interface is further configured to receive said geographical information by identifying a nearest metropolitan area associated with said multiple divisions.

89. (Withdrawn) The computer system as set forth in claim 87 further comprising a structured form operable to receive at least one job description associated with said division.

90. (Withdrawn) The computer system as set forth in claim 89, wherein said structured form further comprises:

a first numerical input cell operable to receive a number corresponding to a maximum allocated compensation for said job description;

a second numerical input cell operable to receive a number of total employment positions associated with said job description; and

a third numerical input cell operable to receive a number of open employment positions associated with said number of total employment positions.

91. (Withdrawn) A distributed network for receiving employer profile information regarding an employer having at least one business unit, said distributed network comprising:

means for maintaining enterprise human resource information;

means for receiving a multiple-division indication regarding an existence of multiple divisions associated with said employer;

means for receiving geographical information associated with at least one of said multiple divisions;

means for receiving user information regarding at least one employer-user to be associated with an employer account corresponding to said employer;

means for receiving access scope information for each of said at least one

Monster Worldwide, Inc. Exhibit 1010 (p.327/1328)

employer-user, said access scope information specifying a scope of access associated with said at least one employer-user.

92. (Withdrawn) The distributed network as recited in claim 91, wherein said geographical information is maintained in a consistent format.

93. (Withdrawn) The distributed network as recited in claim 91, wherein said means for receiving said geographical information further comprises means for identifying a nearest metropolitan area associated with a geographical location associated with said multiple divisions of said employer.

94. (Withdrawn) The distributed network as recited in claim 91 further comprising means for receiving at least one job description associated with said at least one business unit.

95. (Withdrawn) The distributed network as recited in claim 94, wherein said means for receiving at least one job description further comprises:

means for receiving a number of total employment positions associated with said job description; and

means for receiving a number of open employment positions associated with said number of total employment positions.

96. (Withdrawn) A method of searching a plurality of job descriptions, said method performed by a talent-user, and said method comprising:

accessing a talent profile associated with said talent-user, said talent profile including talent-threshold requirements;

identifying target job descriptions associated with prospective employers based on said talent profile, said target job descriptions having job-threshold requirements;

comparing said talent profile with said job-threshold requirements, whereby a threshold comparison results; and

determining whether at least one of said target job descriptions is compatible with said talent profile, based on said threshold comparison.

Monster Worldwide, Inc. Exhibit 1010 (p.328/1328)

97. (Withdrawn) A method of searching a plurality of job descriptions, said method performed by a talent-user, and said method comprising:

receiving search parameters from said talent-user;

identifying target job descriptions associated with prospective employers based on said search parameters, said target job descriptions having job-threshold requirements;

comparing at least one talent profile with said job-threshold requirements, whereby a threshold comparison results; and

determining whether at least one of said target job descriptions is compatible with said talent profile, based on said threshold comparison.

98. (Withdrawn) The method as set forth in claim 97 further comprising:

receiving from said talent-user an indication regarding whether to perform a foreign search for said target job descriptions located outside of a specified geographic location; and

providing job description information corresponding to said target job descriptions that occur outside of a primary location country associated with said talent-user.

99. (Withdrawn) The method as set forth in claim 97, wherein said search parameters include a minimum compensation requirement.

100. (Withdrawn) The method as set forth in claim 97 further comprising:

receiving a request for interview with a target employer from said talent-user; and

transmitting said request for interview to said target employer.

101. (Withdrawn) The method as set forth in claim 100 further comprising:

receiving a request-acceptance indication from said target employer regarding whether said target employer accepts said request for interview; and

providing a questionnaire to said target employer regarding said request-acceptance indication based on a negative value of said request-acceptance indication.

Monster Worldwide, Inc. Exhibit 1010 (p.329/1328)

102. (Withdrawn) The method as set forth in claim 101 further comprising:

inactivating an account associated with said target employer based on a failure to respond to said questionnaire; and

reactivating said account based on a subsequent response to said questionnaire.

103. (Withdrawn) The method as set forth in claim 102 further comprising:

reactivating said account based on passage of a predetermined period of time.

104. (Withdrawn) The method as set forth in claim 97, wherein said search parameters further include at least one search timing parameter, including:

a start time and a search frequency.

105. (Withdrawn) The method as set forth in claim 104, wherein said search frequency is once per day.

106. (Withdrawn) The method as set forth in claim 97 further comprising providing said talent-user with an opportunity to modify said search parameters and said talent profile if said threshold comparison indicates that said talent profile does not match said job-threshold requirements.

107. (Withdrawn) The method as set forth in claim 97 further comprising providing said talent-user with a list of job descriptions for which said talent profile matches said job-threshold requirements.

108. (Withdrawn) The method as set forth in claim 107, wherein said list of job descriptions is ordered by compensation offered in connection with a particular job.

109. (Withdrawn) The method as set forth in claim 108, wherein said list of job descriptions is further ordered by geographic proximity to a geographic location specified in said search parameters.

110. (Withdrawn) A data processing apparatus for searching a plurality of job descriptions, said apparatus operable to communicate with a talent-user, said apparatus comprising:

an application server configured to provide a user interface operative to receive an instruction to search from said talent-user, said user interface further operative to

Monster Worldwide, Inc. Exhibit 1010 (p.330/1328)

receive search parameters from said talent-user;

at least one memory operable to store and provide access to a talent profile associated with said talent-user, said talent profile including talent-threshold requirements;

a search engine configured to access said talent profile and said search parameters;

a filter operable to identify target job descriptions based on said search parameters, said target job descriptions having job-threshold requirements; and

a comparator, coupled with said search engine, operable to compare said talent profile to said job-threshold requirements, whereby a threshold comparison results.

111. (Withdrawn) The apparatus as set forth in claim 110, wherein said comparator is a processor programmed to compare sets of data having a consistent nomenclature.

112. (Withdrawn) The apparatus as set forth in claim 110, wherein said talent-threshold requirements further include a minimum compensation requirement.

113. (Withdrawn) The apparatus as set forth in claim 110 further comprising:

an input form configured to receive a request for interview with a target employer from said talent-user; and

a message processor programmed to transmit said request for interview to said target employer.

114. (Withdrawn) The apparatus as set forth in claim 113, wherein said message processor is further programmed to receive a request-declined indication from said target employer regarding whether said target employer accepts said request for interview, and wherein said message processor is further programmed to provide a questionnaire to said target employer regarding said request-declined indication.

115. (Withdrawn) The apparatus as set forth in claim 114 further comprising a processor programmed to inactivate an account associated with said target employer based on a failure to respond to

Monster Worldwide, Inc. Exhibit 1010 (p.331/1328)

said questionnaire, wherein said processor is further programmed to reactivate said account based on a subsequent response to said questionnaire.

116. (Withdrawn) The apparatus as set forth in claim 115, wherein said processor is further programmed to reactivate said account based on passage of a predetermined period of time.

117. (Withdrawn) The apparatus as set forth in claim 110, wherein said instruction to search further includes at least one search timing parameter, including at least one of:

a start time and a search frequency.

118. (Withdrawn) The apparatus set forth in claim 117, wherein said search frequency is once per day.

119. (Withdrawn) The apparatus as set forth in claim 110, wherein said user interface is further operable to provide said talent-user with an opportunity to modify talent compensation requirements if said threshold comparison indicates that talent compensation requirements do not match said job-threshold requirements.

120. (Withdrawn) The apparatus as set forth in claim 110, wherein said user interface is further operable to provide said talent-user with a list of job descriptions for which said search parameters match said job-threshold requirements.

121. (Withdrawn) The apparatus as set forth in claim 120, wherein said list of job descriptions are ordered by compensation offered in connection with a particular job.

122. (Withdrawn) The apparatus as set forth in claim 121, wherein said list of job descriptions are further ordered by geographic proximity to a geographical location specified in said search parameters.

123. (Withdrawn) A network for searching a plurality of job descriptions, said network operable to receive talent-information from a talent-user, said network comprising:

means for managing enterprise human resource data;

means for receiving job search parameters from said talent-user;

Monster Worldwide, Inc. Exhibit 1010 (p.332/1328)

means for storing at least one set of job search parameters associated with an ideal job for said talent-user;

means for accessing said set of job search parameters and a talent profile associated with said ideal job, said talent profile including a minimum compensation requirement;

means for identifying target job descriptions, based on said set of job search parameters and said talent profile, said target job descriptions having a maximum compensation allowance associated with an employer; and

means for comparing said minimum compensation requirement of said talent-user to said maximum compensation allowance of said employer, whereby a compensation comparison results, and wherein said means for comparing determines whether said talent profile is compatible with at least one of said target job descriptions.

124. (Withdrawn) The network as recited in claim 123, wherein at least one of said job search parameters is a geographic location.

125. (Withdrawn) The network as recited in claim 123 further comprising:

means for receiving a request for interview with said employer from said talent-user; and

means for transmitting said request for interview to said employer.

126. (Withdrawn) The network as recited in claim 125 further comprising:

means for receiving a request-acceptance indication from said employer regarding whether said employer accepts said request for interview; and

means for providing a questionnaire to said employer regarding said request-acceptance indication.

Monster Worldwide, Inc. Exhibit 1010 (p.333/1328)

127. (Withdrawn) The network as recited in claim 126 further comprising means for notifying said employer that an account associated with said employer has been inactivated until said employer responds to said questionnaire.

128. (Withdrawn) The network as recited in claim 123, wherein said job search parameters include at least one search timing parameter, including a start time and a search frequency.

129. (Withdrawn) The network as recited in claim 128, wherein said search frequency is once per day.

130. (Withdrawn) The network as recited in claim 123 further comprising means for providing said talent-user with a list of job descriptions for which said minimum compensation requirement and said job search parameters match maximum compensation allowance.

131. (Withdrawn) The network as recited in claim 130, wherein said list of job descriptions are ordered by compensation offered and geographic proximity to a location specified in said job search parameters.

132. (Withdrawn) A method of searching for talent by searching talent information in a plurality of talent profiles, said method initiated by an employer-user associated with an employer, said method comprising:

receiving search parameters from said employer-user;

accessing a job description associated with said employer-user, said job description, including job-threshold requirements;

identifying target talent profiles associated with prospective talent and consistent with said search parameters from among said plurality of talent profiles, said target talent profiles having associated talent-threshold requirements;

comparing said talent-threshold requirements with said job-threshold requirements, whereby a threshold comparison is produced; and

determining whether at least one of said target talent profiles is compatible with

Monster Worldwide, Inc. Exhibit 1010 (p.334/1328)

said job-threshold requirements, based on said threshold comparison, whereby at least one compatible talent resumé is identified.

133. (Withdrawn) The method as set forth in claim 132 further comprising providing said employer-user with an opportunity to modify said job threshold requirements if said threshold comparison indicates that said job-threshold requirements do not match said talent-threshold requirements.

134. (Withdrawn) The method as set forth in claim 132, wherein said search parameters further include desired candidate parameters associated with a desired candidate.

135. (Withdrawn) The method as set forth in claim 134, wherein said search parameters correspond to a predetermined job description associated with said employer.

136. (Withdrawn) The method as set forth in claim 135, wherein said predetermined job description is associated with an occupational title consistent with the Dictionary of Occupational Titles.

137. (Withdrawn) The method as set forth in claim 136, wherein said employer specifies a required term of experience associated with said occupational title.

138. (Withdrawn) The method as set forth in claim 132, wherein said job-threshold requirements further include a maximum allocated compensation amount.

139. (Withdrawn) The method as set forth in claim 132, wherein said search parameters include at least one skills description consistent with the Dictionary of Occupational Titles.

140. (Withdrawn) The method as set forth in claim 139, wherein said search parameters include a required level of proficiency associated with said skills description.

141. (Withdrawn) The method as set forth in claim 132, wherein said search parameters include at least one industry identification consistent with the North American Industry Classification System, said industry identification associated with an industry.

142. (Withdrawn) The method as set forth in claim 141, wherein said employer specifies a required term of experience within said industry.

143. (Withdrawn) The method as set forth in claim 132 further comprising:

Monster Worldwide, Inc. Exhibit 1010 (p.335/1328)

determining whether said talent information associated with said compatible talent resumé includes a designation of said employer as a preferred employer, whereby a preferred employer determination results; and

based on an affirmative result of said preferred employer determination, providing contact information to said employer regarding said target talent profiles.

144. (Withdrawn) The method as set forth in claim 143, wherein based on a negative result of said preferred employer determination, said employer is afforded an opportunity to communicate a request for interview to said talent associated with said compatible talent resumé.

145. (Withdrawn) The method as set forth in claim 144 further comprising:

determining whether said talent accepts said request for interview, whereby a talent acceptance determination results;

based on a negative result of said talent acceptance determination, providing a questionnaire to said talent; and

based on one of a response and a lack of a response to said questionnaire, providing feedback to said employer-user.

146. (Withdrawn) The method as set forth in claim 132 further comprising:

receiving from said employer-user an indication regarding whether to perform a foreign search for said talent located outside of a specified geographic location; and

providing talent profile information corresponding to said talent that resides outside of a primary location country associated with said employer, wherein said talent has legal authorization to work in said primary location country.

147. (Withdrawn) The method as set forth in claim 132, wherein said search parameters further includes at least one search timing parameter, including a start time and a search frequency.

148. (Withdrawn) The method as set forth in claim 147, wherein said search frequency is once per day.

Monster Worldwide, Inc. Exhibit 1010 (p.336/1328)

149. (Withdrawn) A computer system for facilitating searching talent having associated talent descriptions in a plurality of talent profiles, said computer system configured to receive input from an employer-user associated with an employer, said employer searching in a primary location country, and said computer system comprising:

an application server operable to provide a user interface operative to receive an instruction to search from said employer-user;

a memory operative to store search parameters associated with a desired candidate;

a comparator operative to compare said search parameters and associated job-threshold requirements, wherein target talent resumés are identified based on said search parameters and said plurality of talent profiles, said target talent resumés having associated talent-threshold requirements;

wherein said talent-threshold requirements are compared to said job-threshold requirements, whereby a threshold comparison results; and

wherein it is determined whether at least one of said target talent resumés is compatible with said job-threshold requirements, based on said threshold comparison, whereby at least one compatible talent resumé is identified.

150. (Withdrawn) The computer system as set forth in claim 149 further comprising:

a message processor operative to afford said employer-user an opportunity to express a request for interview to said talent associated with said target talent resumés.

151. (Withdrawn) The computer system as set forth in claim 149, wherein said job-threshold requirements further include a maximum allocated compensation amount.

152. (Withdrawn) The computer system as set forth in claim 151, wherein said talent-threshold requirements further include a minimum required compensation amount.

153. (Withdrawn) The computer system as set forth in claim 149 further comprising:

Monster Worldwide, Inc. Exhibit 1010 (p.337/1328)

preconfigured logic configured to determine whether compatible talent information that is associated with said compatible talent résumé includes a designation of said employer as a preferred employer, whereby a preferred employer determination results; and

wherein contact information associated with said compatible talent resumé is provided to said employer-user, based on an affirmative result of said preferred employer determination.

154. (Withdrawn) The computer system as set forth in claim 153, wherein based on a negative result of said preferred employer determination, said employer-user is afforded an opportunity to express a request for interview to said talent that is associated with said compatible talent resumé.

155. (Withdrawn) The computer system as set forth in claim 154, wherein said preconfigured logic is further configured to determine whether said talent accepts said request for interview, whereby a talent acceptance determination results;

wherein based on a negative result of said talent acceptance determination, a questionnaire is provided to said talent; and

based on one of a response and a lack of said response, feedback is provided to said employer-user.

156. (Withdrawn) The computer system as set forth in claim 149, wherein said user interface further includes a check box configured to receive from said employer-user a foreign search indication regarding whether to perform a foreign search for said talent that resides outside said primary location country; and

based on an affirmative state of said foreign search indication, providing blind resumés corresponding to said talent that resides outside of said primary location country, wherein said talent has legal authorization to work in said primary location country.

Monster Worldwide, Inc. Exhibit 1010 (p.338/1328)

157. (Withdrawn) A distributed network of searching for talent by searching a plurality of talent profiles, said distributed network initiated by an employer-user associated with an employer, said employer searching in a primary location country, said distributed network comprising:

means for receiving an instruction to search from said employer-user;

means for receiving search parameters from said employer-user, said search parameters including an identification of job-threshold requirements;

means for identifying target talent resumés, based on said search parameters and said plurality of talent profiles, said target talent resumés having associated talent-threshold requirements;

means for comparing said talent-threshold requirements with said job-threshold requirements, whereby a threshold comparison results; and

means for determining whether at least one of said target talent resumés is compatible with said job-threshold requirements, based on said threshold comparison, whereby at least one compatible talent resumé is identified.

158. (Withdrawn) The distributed network as recited in claim 157, wherein said search parameters further include desired candidate parameters associated with a desired candidate.

159. (Withdrawn) The distributed network as recited in claim 158, wherein said search parameters correspond to a predetermined job description associated with said employer.

160. (Withdrawn) The distributed network as recited in claim 157, wherein said job-threshold requirements further include a maximum allocated compensation amount.

161. (Withdrawn) The distributed network as recited in claim 157 further comprising:

means for determining whether compatible talent information associated with said compatible talent resumé includes a designation of said employer as a preferred employer, whereby a preferred employer determination results; and

Monster Worldwide, Inc. Exhibit 1010 (p.339/1328)

means for providing contact information to said employer regarding said target talent resumés, based on an affirmative result of said preferred employer determination.

162. (Withdrawn) The distributed network as recited in claim 161, wherein based on a negative result of said preferred employer determination, said employer is afforded an opportunity to communicate a request for interview to said talent associated with said compatible talent resumé.

163. (Withdrawn) The distributed network as recited in claim 162 further comprising:

means for determining whether said talent accepts said request for interview, whereby a talent acceptance determination results;

means for providing a questionnaire to said talent, based on a negative result of said talent acceptance determination; and

means for providing feedback to said employer-user, based on one of a response and a lack of a response to said questionnaire.

164. (Withdrawn) The distributed network as recited in claim 157 further comprising:

means for receiving from said employer-user a foreign search indication regarding whether to perform a foreign search for said talent; and

means for providing blind résumés corresponding to said talent that resides outside of said primary location country, based on an affirmative state of said foreign search indication, wherein said talent has legal authorization to work in said primary location country.

165. (Withdrawn) A method of promoting a career site, said method comprising:

receiving talent information from a plurality of talent regarding qualifications of said talent for performing predetermined activities, said talent information including affiliation information, said affiliation information corresponding to at least one association, wherein said at least one association is in compliance with a career site affiliate policy;

Monster Worldwide, Inc. Exhibit 1010 (p.340/1328)

receiving employer information from a plurality of employers, said employer information including employer affiliation information, said employer affiliation information corresponding to at least one employer-related association, wherein said employer-related association is in compliance with said career site affiliate policy;

matching said talent information with said employer information; and

paying a commission to said at least one association based on said matching of said talent with said employer information.

166. (Withdrawn) The method as set forth in claim 165, wherein said at least one association includes at least one of professional associations, trade associations, labor unions and educational institutions.

167. (Withdrawn) The method as set forth in claim 165, wherein said employer information further includes job-threshold requirements and said talent information includes talent-threshold requirements, and wherein said matching further comprises:

based on a comparison of said talent-threshold requirements and said job-threshold requirements, matching said talent with said employer information when said employer information is compatible with said talent-threshold requirements.

168. (Withdrawn) The method as set forth in claim 165, wherein said at least one association publishes an association newsletter, and wherein said career site affiliate policy requires certain actions to be carried out by said at least one association in order for said at least one association to remain in good standing with said career site, said certain actions including:

publicly endorsing said career site;

permitting use of a name of said at least one association in connection with advertisements of said career site;

promoting said career site to members of said at least one association in connection with an association member employment program;

Monster Worldwide, Inc. Exhibit 1010 (p.341/1328)

providing said career site with advertising space in said association newsletter;

and

posting jobs associated with said at least one association to said career site.

169. (Withdrawn) The method as set forth in claim 165, wherein said commission is a fixed amount or a percentage of a fee associated with a transaction.

170. (Withdrawn) A computer system used in connection with promoting a career site, said computer system comprising:

a server operable to provide an on-line user interface operable to receive talent information from a plurality of talent regarding qualifications of said talent for performing predetermined activities, and from employers regarding job descriptions said talent information including affiliation information, said affiliation information associated with at least one association, wherein said association is in compliance with a career site affiliate policy of said career site;

an input processor configured to receive said job descriptions from a plurality of employers;

a comparator for matching said talent with said job descriptions; and

a payment processor configured to pay a commission to said association based on said matching.

171. (Withdrawn) The computer system as set forth in claim 170, wherein said job descriptions include job-threshold requirements and said talent information includes talent-threshold requirements, and wherein said comparator matches said talent with said job descriptions, based on a comparison of said talent-threshold requirements and said job-threshold requirements.

172. (Withdrawn) The computer system as set forth in claim 170, wherein said association publishes an association newsletter, and wherein said career site affiliate policy requires certain actions to

Monster Worldwide, Inc. Exhibit 1010 (p.342/1328)

be carried out by said association in order for said association to remain in good standing with said career site, said certain actions including:

publicly endorsing said career site;

permitting use of a name of said association in connection with advertisements of said career site;

promoting said career site to members of said association in connection with an association member employment program;

providing said career site with advertising space in at least one issue of a newsletter said association; and

posting jobs associated with said association to said career site.

173. (Withdrawn) A distributed network for promoting a career site, said distributed network comprising:

means for managing enterprise human resource data;

means for receiving talent information from talent regarding qualifications of talent for performing predetermined activities, said talent information including affiliation information, said affiliation information associated with at least one association, wherein said at least one association is in compliance with a career site affiliate policy;

means for receiving job descriptions from a plurality of employers;

means for matching said talent with said job descriptions; and

means for paying a commission to said at least one association based on said matching.

174. (Withdrawn) The distributed network as recited in claim 173, wherein said job descriptions further include job-threshold requirements and said talent information includes talent-threshold requirements, and wherein said matching further comprises:

Monster Worldwide, Inc. Exhibit 1010 (p.343/1328)

based on a comparison of said talent-threshold requirements and said job-threshold requirements, matching said talent with said job descriptions when said job descriptions are compatible with said talent-threshold requirements.

175. (Withdrawn) The distributed network as set forth in claim 174, wherein said at least one association publishes an association newsletter, and wherein said career site affiliate policy requires certain actions to be carried out by said at least one association in order for said at least one association to remain in good standing with said career site, said certain actions including:

publicly endorsing said career site;

permitting use of a name of said at least one association in connection with advertisements of said career site;

promoting said career site to members of said at least one association in connection with an association member employment program;

providing said career site with advertising space in said association newsletter; and

posting jobs associated with said at least one association to said career site.

176. (Withdrawn) A method for compensating at least one wholesaler for marketing a career site according to a career site wholesaler policy, said method comprising:

establishing at least one wholesaler account associated with said career site;

receiving job descriptions from employers, said employers associated with at least one association, said association assigned to said wholesaler account;

receiving talent-information from talent, said talent associated with said association;

matching said talent with said job descriptions; and

paying a commission to said wholesaler based on said matching.

Monster Worldwide, Inc. Exhibit 1010 (p.344/1328)

177. (Withdrawn) The method as set forth in claim 176, wherein said association includes at least one of a professional association, a trade association, a labor union, and an educational institution.

178. (Withdrawn) The method as set forth in claim 176, wherein said job descriptions further include job-threshold requirements and said talent-information includes talent-threshold requirements, and wherein said matching further comprises:

based on a comparison of said talent-threshold requirements and said job-threshold requirements, matching said talent with said job descriptions when said job descriptions are compatible with said talent-threshold requirements.

179. (Withdrawn) The method as set forth in claim 176, wherein said career site wholesaler policy requires certain actions to be carried out by said wholesaler in order for said wholesaler to remain in good standing with said career site, said certain actions including at least one of:

publicly endorsing said career site;

permitting use of a name of said wholesaler in connection with advertisements of said career site;

promoting said career site to said employers associated with said wholesaler;

assisting said employers in listing employer jobs associated with said employers;

posting wholesaler internal jobs associated with said wholesaler to said career site; and

linking a website associated with said wholesaler to said career site.

180. (Withdrawn) The method as set forth in claim 176, wherein said commission is a flat amount or a percentage amount.

181. (Withdrawn) A computer system for automating a process of compensating at least one wholesaler for promoting a career site, said computer system comprising:

a database containing wholesaler-information regarding at least one wholesaler account associated with said career site;

Monster Worldwide, Inc. Exhibit 1010 (p.345/1328)

an interface operative to receive job descriptions from employers, said employers associated with at least one association, said association assigned to said wholesaler account;

wherein said interface is further operative to receive talent information from talent, said talent associated with at least one organization, said organization assigned to said wholesaler account;

matching said talent with said job descriptions; and

paying a commission to said wholesaler based on said matching.

182. (Withdrawn) A distributed network for compensating at least one wholesaler for promoting a career site, said distributed network comprising:

means for maintaining enterprise human resource data;

means for establishing at least one wholesaler account associated with said career site;

means for receiving job descriptions from employers, said employers being associated with at least one association, said association assigned to said wholesaler account;

means for receiving talent information from talent, said talent being associated with at least one organization, said organization assigned to said wholesaler account;

means for matching said talent with said job descriptions; and

means for paying a commission to said wholesaler based on said matching.

183. (Withdrawn) A method for compensating at least one retailer for marketing a career site according to a career site marketing policy, said method comprising:

establishing at least one retailer account associated with said career site;

receiving employer account information associated with at least one employer account from at least one of said retailer and a secondary recruited retailer associated

Monster Worldwide, Inc. Exhibit 1010 (p.346/1328)

with said retailer, said employer account assigned to said retailer, said employer account information including job descriptions;

receiving talent-information from talent;

matching said talent with said job descriptions; and

paying a commission to said retailer based on said matching.

184. (Withdrawn) The method as set forth in claim 183, wherein said retailer is compensated for recruiting said secondary recruited retailer by way of a multi-level-marketing system and wherein said secondary recruited retailer provides employer information regarding employers not subject to a preexisting commission agreement.

185. (Withdrawn) The method as set forth in claim 184, wherein said multi-level-marketing system includes successive levels consistent with local law.

186. (Withdrawn) A computer system for facilitating compensation of at least one retailer for marketing a career site according to a career site marketing policy, said computer system comprising:

a database containing information regarding at least one retailer account associated with said career site;

an interface operable to receive employer account information associated with at least one employer account from at least one of said retailer and a secondary recruited retailer associated with said retailer, said employer account assigned to said retailer, said employer account information including job descriptions; and

a payment processor operable to pay a commission to said retailer based on matching said job descriptions with a job candidate.

187. (Withdrawn) The computer system as set forth in claim 186, wherein said retailer is further compensated for recruiting said secondary recruited retailer by way of a multi-level-marketing system.

Monster Worldwide, Inc. Exhibit 1010 (p.347/1328)

188. (Withdrawn) A distributed network for providing payments to at least one retailer for marketing a career site according to a career site marketing policy, said distributed network comprising:

an enterprise database management system;

international payment system architecture;

means for establishing at least one retailer account associated with said career site;

means for receiving employer account information associated with at least one employer account from at least one of said retailer and a secondary recruited retailer associated with said retailer, said employer account assigned to said retailer, said employer account information including job descriptions;

means for receiving talent-information from talent;

means for matching said talent with said job descriptions, said means for matching providing matching results; and

means for paying a commission to said retailer based on said matching results.

189. (Withdrawn) The distributed network as set forth in claim 188, wherein said means for paying further comprises:

means for further compensating said retailer for recruiting said secondary recruited retailer by way of a multi-level-marketing system.

190. (Withdrawn) A computer-readable medium containing instructions capable of causing a processor to perform a process for operating a career site, said career site including a talent database of talent resumés corresponding to a plurality of talent candidates and a database of job descriptions, said instructions comprising:

instructions operative to receive personal information associated with said talent resumés, said personal information including contact information;

instructions operative to receive career information regarding at least one desired

Monster Worldwide, Inc. Exhibit 1010 (p.348/1328)

career position of a candidate in said plurality of talent candidates, said career information formatted as structured data consistent with a format of said database of job descriptions;

instructions operative to receive experience information regarding said candidate, said experience information of relevance to prospective employers;

instructions operative to receive at least one command to search from a talent-user;

instructions operative to access desired job parameters associated with a desired job of said talent-user, and to access a talent profile, said talent profile including talent-threshold requirements;

instructions operative to identify target job descriptions, based on said desired job parameters and said talent profile, said target job descriptions having job-threshold requirements; and

instructions operative to compare said talent-threshold requirements to said job-threshold requirements, whereby a threshold comparison results;

instructions operative to determine whether at least one of said target job descriptions is compatible with said talent-threshold requirements, based on said threshold comparison, whereby at least one matched job-listing and candidate pair results;

instructions operative to establish at least one marketer account associated with a marketer of said career site; and

instructions operative to effect payment of a commission to said marketer based on an occurrence of said matched job-listing and candidate pair.

191. (Withdrawn) A distribution medium containing instructions capable of causing a processor to perform a process for operating computer system, said computer system including a talent

Monster Worldwide, Inc. Exhibit 1010 (p.349/1328)

database of talent resumés corresponding to a plurality of talent candidates and a database of job descriptions, said instructions comprising:

instructions operative to receive personal information associated with said talent resumés, said personal information including contact information;

instructions operative to receive position information regarding at least one position associated with an employer instructions operative to receive experience information regarding a candidate;

instructions operative to receive a command to search from an initiating party;

instructions operative to match said target job descriptions with said talent resumés, based on a threshold comparison; and

instructions operative to effect payment of a commission to a marketer based only on an occurrence of said match.

192. (Withdrawn) A method of providing employment services to at least one candidate in a plurality of talent-contributors, said method comprising:

receiving information from said candidate;

receiving job description information associated with at least one job, wherein said job description information comprises at least one benefit identification associated with a benefit provided in connection with said job; and

providing said candidate with said benefit identification.

193. (Withdrawn) The method as set forth in claim 192, wherein said benefit is chosen from incentive pay, health insurance, retirement account, dental insurance, continuing education, signing bonus, pension, on-site daycare, flex-time, free parking, relocation, paid vacation, and differential shift pay.

194. (Withdrawn) A computer system for providing employment services to at least one candidate in a plurality of talent-contributors, said computer system comprising:

Monster Worldwide, Inc. Exhibit 1010 (p.350/1328)

a first interface operable to receive information from said candidate;

a second interface operable to receive job description information associated with at least one job, wherein said job description information comprises at least one benefit identification associated with a benefit provided in connection with said job; and

an output device operable to provide at least one benefit indicator to said candidate, said benefit indicator associated with said benefit identification.

195. (Withdrawn) The computer system as set forth in claim 194, wherein said benefit indicator comprises a graphical icon.

196. (Withdrawn) A distributed network for providing employment services to at least one candidate in a plurality of talent-contributors, said distributed network comprising:

means for managing enterprise data associated with an employer;

candidate means for receiving candidate information from said candidate;

job means for receiving job description information associated with at least one job, wherein said job description information comprises at least one benefit identification associated with a benefit provided in connection with said job; and

means for providing at least one benefit indicator to said candidate, said benefit indicator associated with said benefit identification.

197. (Withdrawn) The computer system as set forth in claim 194, wherein said benefit indicator is provided in the form of an image object formatted in a page using the Hypertext Markup Language.

198. (Cancelled)

199. (Cancelled)

200. (Currently Amended) The method of claim 5[[,]] wherein said employer agrees in advance, to real time billing and/or payment of a fee to a career site operator upon said candidate's consent to the release of candidate's contact information.

Monster Worldwide, Inc. Exhibit 1010 (p.351/1328)

201. (Cancelled)

202. (Cancelled)

203. (Cancelled)

204. (Currently Amended) The method as set forth in claim 5[[,]] wherein the amount of said obligation is computed in real time.

205. (Currently Amended) The method as set forth in claim 5 wherein ~~during said determining step,~~ before processing the search request:

determining whether the requesting one of said candidate and said employer was previously requested to provide a response to a request for release of contact information; and

if it is determined that either said employer or said candidate was previously requested to provide a response to a request for release of contact information and no response was received, then such non-responding employer or candidate is precluded from further interaction with the system until said response is provided.

206. (Cancelled)

207. (Cancelled)

208. (New) The method as set forth in Claim 5 wherein:

if the attributes of the requesting one of said candidate and said employer do not satisfy the minimum requirements of the non-requesting candidate or employer, then communicating to said requesting one of said candidate and said employer that at least one attribute of said requesting party does not satisfy the minimum requirements of the non-requesting party;

offering the opportunity to the requesting one of said candidate and said employer to change its at least one non-satisfying attribute to satisfy the minimum requirements of the non-requesting party; and

Monster Worldwide, Inc. Exhibit 1010 (p.352/1328)

if the requesting one of said candidate and said employer changes its at least one non-satisfying attribute to satisfy the minimum requirements of the non-requesting party, then receiving a response from said non-requesting candidate or employer consenting to the release of the contact information of said candidate to said employer.

209. (New) A method for operating a computer system for authorizing information exchange between at least one of a plurality of candidates and at least one of a plurality of employers prior to any direct contact between said candidate and said employer, said candidate having one or more attributes, including candidate minimum requirements, and said employer having one or more attributes, including employer minimum requirements, said method comprising:

storing the candidate attributes and requirements in a candidate database;

storing the employer attributes and requirements in an employer database;

establishing a portion of the employer database to be searchable by said candidate;

receiving a search request from said candidate to search the searchable portion of the employer database for a possible employment opportunity based upon certain search parameters;

processing the search request and providing the results to the requesting candidate;

receiving a request from said candidate to submit said candidate's contact information to at least one employer based upon the search results;

determining that the attributes of the candidate satisfy the minimum requirements of the at least one employer;

Monster Worldwide, Inc. Exhibit 1010 (p.353/1328)

receiving a response from said at least one employer that it desires to receive the contact information of said candidate;

for each specific response, obligating a payment due in real time based on said employer's consent to receive the contact information of said candidate wherein said payment due is a fee to a career site operator; and

providing the exchange of contact information in real time between said candidate and said at least one employer.

210. (New) The method as set forth in Claim 209 wherein:

if the attributes of the candidate do not satisfy the minimum requirements of the at least one employer, then communicating to said candidate that at least one of the candidate's attributes does not satisfy the minimum requirements of the at least one employer;

offering the opportunity to said candidate to change its at least one non-satisfying attribute in order to satisfy the minimum requirements of the said at least one employer; and

if said candidate changes its at least one non-satisfying attribute to satisfy the minimum requirements of the said at least one employer, then receiving a response from said at least one employer that it desires to receive the contact information of said candidate.

211. (New) The method as set forth in Claim 209 wherein before processing the search request of said candidate:

determining whether said candidate was previously requested to provide a response to a request for release of contact information; and

if it is determined that said candidate was previously requested to provide a response to a request for release of contact information by an employer and no response was received from said candidate, then precluding said candidate from further interaction with the

Monster Worldwide, Inc. Exhibit 1010 (p.354/1328)

computer system until a response to the previous request for release of contact information is received from said candidate.

212. (New) The method as set forth in Claim 211 wherein:

if no response to a previous request for release of contact information is received from said candidate within a predetermined time period, then communicating to said employer that no response for release of contact information was received from said candidate.

213. (New) The method as set forth in Claim 212 further including:

after communicating to said employer that no response for release of contact information was received from said candidate, then allowing said candidate to again interact with the computer system.

214. (New) A method for operating a computer system for authorizing information exchange between at least one of a plurality of candidates and at least one of a plurality of employers prior to any direct contact between said candidate and said employer, said candidate having one or more attributes, including candidate minimum requirements, and said employer having one or more attributes, including employer minimum requirements, said method comprising:

storing the candidate attributes and requirements in a candidate database;

storing the employer attributes and requirements in an employer database;

establishing a portion of the candidate database to be searchable by said employer;

receiving a search request from said employer to search the searchable portion of the candidate database for a possible employment opportunity based upon certain search parameters;

Monster Worldwide, Inc. Exhibit 1010 (p.355/1328)

processing the search request and providing the results to the requesting employer;

receiving a request from said employer for release of contact information of at least one candidate based upon the search results;

determining that the attributes of the employer satisfy the minimum requirements of the at least one candidate;

receiving a response from said at least one candidate that it desires to release the contact information of said candidate to said employer;

for each specific response, obligating a payment due from said employer in real time based on said at least one candidate's consent for release of contact information wherein said payment due is a fee to a career site operator; and

providing the exchange of contact information in real time between said at least one candidate and said employer.

215. (New) The method as set forth in Claim 214 wherein:

if the attributes of the employer do not satisfy the minimum requirements of the at least one candidate, then communicating to said employer that at least one of the employer's attributes does not satisfy the minimum requirements of the at least one candidate;

offering the opportunity to said employer to change its at least one non-satisfying attribute in order to satisfy the minimum requirements of said at least one candidate; and

if said employer changes its at least one non-satisfying attribute in order to satisfy the minimum requirements of said at least one candidate, then receiving a response from said at least one candidate consenting to the release of the contact information of said at least one candidate to said employer.

Monster Worldwide, Inc. Exhibit 1010 (p.356/1328)

216. (New) The method as set forth in Claim 214 wherein before processing the search request of said employer:

determining whether said employer was previously requested to provide a response to a request for release of contact information; and

if it is determined that said employer was previously requested to provide a response to a request for release of contact information by a candidate and no response was received from said employer, then precluding said employer from further interaction with the computer system until a response to the previous request for release of contact information is received from said employer.

217. (New) The method as set forth in Claim 216 wherein:

if no response to a previous request for release of contact information is received from said employer within a predetermined time period, then communicating to said candidate that no response for release of contact information was received from said employer.

218. (New) The method as set forth in Claim 217 further including:

after communicating to said candidate that no response for release of contact information was received from said employer, then allowing said employer to again interact with the computer system.

219. (New) A method executed by a computer system for authorizing the exchange of contact information between at least one of a plurality of candidates and at least one of a plurality of employers prior to any direct contact between said candidate and said employer, said method comprising:

Monster Worldwide, Inc. Exhibit 1010 (p.357/1328)

determining if either said employer or said candidate has not yet responded to a request for release of contact information;

if it is determined that either said employer or said candidate has not yet responded to a request for release for contact information, then precluding said employer or candidate from further interaction with the computer system until said response is provided;

communicating to said employer or candidate that a response to a request for release of contact information is required;

offering the opportunity to said employer or said candidate to respond to the request for release of contact information;

if said employer or candidate responds to the request for release of contact information, then determining that there is mutual consent for the release of contact information regarding such response;

obligating a payment due in real time based on the mutual consent for release of contact information wherein said payment due is a fee to a career site operator; and

providing the exchange of contact information in real time between said candidate and said employer.

220. (New) A method executed by a computer system for authorizing information exchange between at least one of a plurality of candidates and at least one of a plurality of employers prior to any direct contact between said candidate and said employer, said method comprising:

receiving a request for release of contact information from either said candidate or said employer;

Monster Worldwide, Inc. Exhibit 1010 (p.358/1328)

determining whether there is mutual consent for the release of contact information regarding the candidate for each specific request;

receiving a response from either said candidate or said employer declining the release of contact information regarding said candidate;

querying said candidate or said employer and requesting reasons why said candidate or said employer declined the request for release of contact information; and

providing a response to said candidate or said employer communicating the reasons why said candidate or said employer declined the request for release of said contact information.

221. (New) A computer system for coordinating information exchange between at least one of a plurality of candidates and at least one of a plurality of employers prior to any direct contact between said candidate and said employer, said candidate having one or more candidate attributes, including candidate minimum requirements, said employer having one or more employer attributes, including employer minimum requirements, said computer system comprising:

a processor;

memory connected to said processor;

at least one program for controlling the operation of said processor; and

an interface operable to communicate with said candidate and said employer;

said processor being operative with said memory and with said at least one program to:

store the candidate attributes and requirements in a candidate database;

store the employer attributes and requirements in an employer database;

Monster Worldwide, Inc. Exhibit 1010 (p.359/1328)

establish a searchable portion of the candidate database;

establish a searchable portion of the employer database;

receive a search request from either said candidate or said employer to search the searchable portion of one of the candidate and employer databases for a possible employment opportunity;

process the search request and provide the results thereof to the requesting one of said candidate and said employer;

receive a request for release of contact information from the requesting one of said candidate and said employer based upon the search results;

determine that the attributes of the requesting one of said candidate and said employer satisfy the minimum requirements of the non-requesting candidate or employer stored in the candidate and employer databases;

determine that there is mutual consent for the release of contact information regarding the candidate;

obligate a payment due from said employer in real time based on the mutual consent for release of contact information wherein said payment fee is due to a career site operator; and

provide the exchange of contact information in real time prior to any direct contact between said candidate and said employer.

222. (New) The computer system as set forth in Claim 221 wherein if the attributes of the requesting one of said candidate and said employer do not satisfy the minimum requirements of the non-requesting candidate or employer, said processor being further operable to:

communicate to said requesting one of said candidate and said employer

Monster Worldwide, Inc. Exhibit 1010 (p.360/1328)

that at least one attribute of said requesting party does not satisfy the minimum requirements of the non-requesting party;

offer the opportunity to the requesting one of said candidate and said employer to change its at least one non-satisfying attribute in order to satisfy the minimum requirements of said non-requesting party; and

if the requesting one of said candidate and said employer changes its at least one non-satisfying attribute in order to satisfy the minimum requirements of said non-requesting party, then determine that there is mutual consent for the release of contact information regarding the candidate for each specific response.

223. (New) The computer system as set forth in Claim 221 wherein said system further includes a payment interface operable to receive payment in real time from said employer, said processor being further operable to receive payment in real time from said employer through said payment interface based upon the occurrence of said mutual consent.

224. (New) The distributed network as set forth in Claim 14 further including:

means for, if the attributes of the requesting one of said candidate and said employer do not satisfy the minimum requirements of the non-requesting candidate or employer, then communicating to the requesting one of said candidate and said employer that at least one attribute of said requesting party does not satisfy the minimum requirements of the non-requesting party;

means for offering the opportunity to the requesting one of said candidate and said employer to change its at least one non-satisfying attribute in order to satisfy the minimum requirements of said candidate and said employer; and

Monster Worldwide, Inc. Exhibit 1010 (p.361/1328)

means for, if the requesting one of said candidate and said employer changes its at least one non-satisfying attribute in order to satisfy the minimum requirements of said non-requesting party, determining that there is mutual consent for the release of contact information regarding said candidate to said employer.

225. (New) The method as set forth in claim 5 wherein before processing the search request:

determining whether the non-requesting one of said candidate and said employer was previously requested to provide a response to a request for release of contact information; and

if it is determined that either said non-requesting employer or candidate was previously requested to provide a response to a request for release of contact information and no response was received, then such non-responding non-requesting employer or candidate is precluded from further interaction with the system until said response is provided.

Monster Worldwide, Inc. Exhibit 1010 (p.362/1328)

REMARKS

The above amendments and these remarks are now submitted in response to the Office Action mailed November 10, 2005 in the above-identified application. Claims 5, 14, 17, 200, 204 and 205 have been amended; Claims 7, 8, 11, 12, 15, 198, 199, 202, 203, 206 and 207 have been cancelled; and new Claims 208-225 have been added.

Claims 5, 14, 209, 214, 219, 220 and 221 are independent claims remaining in the case.

35 U.S.C. §112 REJECTIONS

Claims 8 and 17 stand rejected under 35 U.S.C. §112 as being indefinite with respect to recitation of the language "the non-requesting" as used in these claims. Claim 8 has been cancelled. Claim 17 is not indefinite based upon the language of independent claim 14 which will be hereinafter further discussed. Claim 14 specifically sets forth means for receiving a search request from either the candidate or the employer and specifically refers to receiving a request for the release of contact information from the requesting one of said candidate and said employer. Independent Claim 14 is therefore very clear as to one of either the candidate or the employer requesting the release of contact information. As a result, since only one of the two parties is requesting the release of contact information, the remaining party is the non-requesting one of either the candidate and/or the employer. In fact, Claim 14 specifically addresses means for determining that the attributes of the requesting one of said candidate and said employer satisfy the minimum requirements of a non-requesting candidate or employer. As a result, independent claim 14 clearly establishes both a requesting and a non-requesting party and dependent Claim 17 has proper antecedent basis with respect to its base claim 14.

Monster Worldwide, Inc. Exhibit 1010 (p.363/1328)

35 U.S.C. §103 REJECTIONS

Claims 5-8, 10-12, 14, 15, 17, 198-200 and 202-207 stand rejected under 35 U.S.C. §103(a) as being unpatentable over Walker et al U.S. Patent No. 5,884,270 (the Walker reference) in view of Pineda et al International Publication No. WO01/82158 A2 (the Pineda reference). Both the Walker and Pineda references are newly cited and relied upon in the prosecution of this application.

THE CITED WALKER REFERENCE

The Walker reference discloses a system for controlling the release of confidential or sensitive information of at least one of the parties involved in an anonymous communication. This control and anonymity is accomplished in several ways, for example, by encrypting communications between the parties; by establishing a communications channel between the party and requestor while not revealing the identity of the party and/or requestor to each other; and, importantly, by establishing first party and second party rules which must be met before releasing the identity of either party. See, Column 4, Lines 35-37, 63-66; and Column 5, Lines 5-30. The Walker system receives from a first party first data including the identity of the first party and it also receives at least two first party rules for releasing the first data including a rule for releasing the identity of the first party. Similar information is gathered from the second party including receiving from the second party at least two second party rules for releasing the second party data including a rule for releasing the identity of the second party. The Walker system is then operative to transmit the identity of the first party to the second party based upon satisfying the first party rule for releasing the identity of the first party and upon satisfying the second party rule for releasing the identity of the second party. This release of contact information is

Monster Worldwide, Inc. Exhibit 1010 (p.364/1328)

controlled by the central controller 200 and does not require receiving a response from either the first party or the second party during the process. If the first and second party rules are met, the central controller will automatically release the search results and if the first and second party rules for releasing the identity of those parties are likewise met, the central controller 200 will automatically release the identity of the first and second parties. This method and procedure is clearly set forth in Claim 1 of the Walker reference.

The mutual agreement between the parties as to the release of contact information in the Walker method is therefore based solely upon pre-determined rules which are entered into the central controller by each of the respective parties. The mutual consent is based upon the pre-determined first and second party rules for releasing such information. In fact, all of the independent claims of the Walker reference require the establishment of first and second party rules for releasing the identity of each respective party. The Examiner's cite to Walker, Column 7, Lines 24-41 supports this pre-authorized release of contact information through the use of first and second party rules. This is totally different from Applicant's invention wherein a response is required from the non-requesting party for each request for the release of contact information as will be hereinafter further explained.

The Walker method and system also allows the first and second parties to communicate directly with each other in an anonymous fashion. This is verified by the Examiner's cite to Walker, Column 21, Line 58 through Column 22, Line 9. This is totally different from Applicant's invention wherein no direct contact between the candidate and the employer, or between the first and second party, occurs until after there has been an exchange of contact information in real time.

Monster Worldwide, Inc. Exhibit 1010 (p.365/1328)

THE CITED PINEDA REFERENCE

The Pineda reference discloses a method for matching which allows a candidate to enter profile data, including identification data, and to match their criteria and then view available job postings. The system further allows an employer to search profile data corresponding to a plurality of candidates and return search results corresponding to candidates who match the search criteria. After search results have been displayed, the employer can review certain portions of each candidate's profile data and the employer can then authorize a payment for each candidate for whom the employer would like to receive the identification data so that they can make contact with the candidate through their normal hiring process. This system again does not require mutual consent between the candidate and employer for each specific request and the release of contact information is automatic once the employer authorizes payment. It is payment of the fee by the employer which unlocks the identification and contact data. In fact, all of the independent claims of the Pineda reference require providing the employer with the requested identification data based upon receiving a request from the employer for such identification data and charging a fee to the employer for such data. As set forth and explained in more detail below, the Pineda employment system and method, among other things, does not obtain mutual consent from both the candidate and the employer for the release of contact information; it does not check the attributes of the requesting party against the minimum requirements of the non-requesting party; it does not give the requesting party an opportunity to satisfy the minimum requirements of the non-requesting party; it does not preclude an authorized user from further interaction with the system until a response to a previous request for release of contact information is obtained; and it does not provide the feedback communication as clearly set forth in the various claims pending in the present application.

Monster Worldwide, Inc. Exhibit 1010 (p.366/1328)

REVIEW OF PENDING CLAIMS IN THE APPLICATION

In light of all of the prior art cited during the prosecution of the present application including the Walker reference, Claim 5 has been further amended to more clearly define Applicant's invention. As clearly set forth in Claim 5, the present method requires obtaining attributes and minimum requirements for both the plurality of candidates and the plurality of employers, and that these attributes and minimum requirements be stored in a candidate database and an employer database in a searchable format. Attributes and requirements as applied to talent and employer profiles are clearly defined in the specification at pages 10, 19, 24, 25, 28, 41, 54, 56, 62, 63 and elsewhere and, although some attributes may be requirements and some requirements may be attributes, these two terms are not synonymous and may include different criteria. Background information associated with talent-capability attributes is received in a structured format. See, Figs. 2 and 3. Job description information is received from employers in a structured format. See, Figs. 8 and 9.

Once the attributes and minimum requirements of both the candidate and the employer are entered into the appropriate databases, Claim 5 requires receiving a search request from either a candidate or an employer to search the searchable profile of one of the candidate and employer databases for a possible employment opportunity based upon certain search parameters. Once the search request has been processed, the results of the search are provided to the requesting one of either the candidate or the employer. For example, a candidate may request a search for all aerospace engineering jobs in the St. Louis area. The results of this search would be provided to the candidate wherein the job opportunities would be described but the employer's identity and/or contact information associated with each such aerospace engineering

Monster Worldwide, Inc. Exhibit 1010 (p.367/1328)

job in the St. Louis area would not be released. If the requesting party, in this case the candidate, requests the release of contact information for at least one of the job opportunities found in the search, the present method then makes a further determination that the attributes of the requesting party, in this case the candidate, actually satisfy the minimum requirements established by the non-requesting party, in this case the employer, for the specific job identified in the search results and listed in the employer database. In the example given, the employer may require that the candidate have 5 years experience in the industry with specific experience in engine design. According to Claim 5, the present method would therefore take the employer's minimum requirements that an appropriate candidate have 5 years experience in the industry and have engine design experience and search the candidate's attributes to see if the candidate meets these minimum requirements. If the candidate does not satisfy the minimum requirements established by the employer as required by Claim 5, the candidate is then sent a message indicating that the candidate is not qualified for submitting his contact information for the employment opportunity requested. This method and procedure is clearly set forth in Figs. 4, 7A and 7B of the present invention for the candidate (specification starting at page 57) and in corresponding Fig. 10 for the case where the employer initiates the search request (specification starting at page 75). In the example given above where our candidate does meet the minimum requirements of the employer, Claim 5 then specifically requires that a response must be received from the non-requesting employer consenting to the release of the candidate's contact information to the employer. Clearly, the determining step where the present method determines whether the attributes of the requesting party satisfies the minimum requirements of the non-requesting party is not disclosed in any of the cited prior art references including the Walker reference. Walker merely discloses that once the search results have been transmitted, if the first

Monster Worldwide, Inc. Exhibit 1010 (p.368/1328)

and second party rules for releasing their respective identities are satisfied, the exchange of contact information automatically takes place. There is no further determination with respect to comparing attributes and minimum requirements, nor is there any specific communication with the non-requesting party to receive a specific response from that non-requesting party consenting to the release of contact information. According to the Walker disclosure, consent is automatic if the first and second party rules are satisfied.

Applicant's system as recited in Claim 5 is more sophisticated than the Walker system and it not only transmits the results of the search based upon the search parameters, but it further makes additional determinations that all of the minimum requirements of the non-requesting party are satisfied before requesting mutual consent to the release of contact information. This series of steps is clearly missing from the Walker system and, for this reason alone, the present method as defined in Claim 5 is clearly and patentably distinguishable over the disclosure in the Walker reference.

Newly amended Claim 5 continues to further require obligating a payment due in real time based on the response to the request for release of information wherein the payment is due to a career site operator and thereafter providing the exchange of contact information in real time prior to any direct contact between the candidate and the employer. The Examiner has indicated that the Walker reference fails to expressly disclose obligating payment due from the employer and cites Pineda for the proposition of disclosing charging a fee to an employer. More particularly, Pineda specifically requires that the employer pay a fee before any release of contact information. See, Page 12 of the Pineda publication starting at Line 25 through Page 13, Lines 1-2 and Lines 16-18. See also, Fig. 4 of Pineda. This is not true with respect to the present system wherein either the candidate or the employer will be obligated a payment due in

Monster Worldwide, Inc. Exhibit 1010 (p.369/1328)

real time as soon as a positive response is received from the non-requesting party consenting to the release of contact information to the requesting party. In Claim 5, upon receipt of consent to the release of contact information, obligation of the payment is immediately made and the exchange of contact information is thereafter immediately made in real time before payment is received. This payment sequence in combination with the other steps of newly amended Claim 5 clearly and patentably distinguish Claim 5 over both the Walker reference and the Pineda reference, either alone or in combination with each other.

Claim 5 specifically requires a separate determination step to ensure that the attributes of the requesting party satisfy the minimum requirements of the non-requesting party; that a very specific response be received from the non-requesting party consenting to the release of contact information (not just an automatic release based upon party rules); an immediate obligation of a payment in real time to either party; and the exchange of contact information occurs in real time and before receipt of any payment and, importantly, prior to any direct contact between the candidate and the employer. These are very different and distinguishable steps as compared to both the Walker and Pineda references.

The Examiner has rejected dependent Claim 10 solely on the proposition that a company would pay different rates for a candidate having different experience levels. No prior art is cited for this rejection. Although Applicant is not claiming the features set forth in Claim 10 per se, none of these features are disclosed in the cited prior art and such limitations, in conjunction with the other novel features of the present method as set forth and defined in base Claim 5, further patentably distinguish Claim 10.

Newly amended Claim 14 is directed to a network for facilitating the exchange of contact information and such claim includes many of the limitations set forth and described above with

Monster Worldwide, Inc. Exhibit 1010 (p.370/1328)

respect to independent Claim 5. In this regard, Claim 14 specifically requires that the network include means for storing candidate and employer attributes and requirements in separate databases and that at least a portion of the candidate database and a portion of the employer database are searchable by either the candidate and the employer; means for processing a search request from either the candidate or the employer and providing the results of such search to the requesting party; means for receiving a request for release of contact information from the requesting party based upon the search results; and, importantly, further means for determining that the attributes of the requesting party satisfy the minimum requirements of the non-requesting party. Here again, as explained above with respect to Claim 5, none of the cited prior art references including the Walker reference disclose this determination mechanism to ensure that all of the attributes of the requesting party stored in the appropriate database satisfies at least the minimum requirements of the non-requesting party stored in that appropriate database. This eliminates the possibility of initially matching up candidates with employers only to find out that the candidates do not have the requisite minimum requirements that the employer is looking for and, vice versa, that the employer does not meet the minimum requirements of the candidate such as location, certain minimum salary, certain benefits, and so forth. This extra determination requirement is, among other things, not disclosed in the cited prior art.

Still further, newly amended Claim 14 further requires that there be mutual consent for the release of contact information regarding the candidate; that the present network compute a payment fee in real time based on the mutual consent; that it obligate the payment fee to either the candidate or employer in real time; that it provide means for collecting the fee in real time; and that it provide means for exchanging the contact information in real time prior to any direct contact between the candidate and the employer. For all of the reasons discussed above with

Monster Worldwide, Inc. Exhibit 1010 (p.371/1328)

respect to Claim 5, the Pineda reference does not disclose the payment process recited in Claim 14 including, importantly, means for collecting the payment fee in real time. For all of these reasons, Claim 14 is clearly and patentably distinguishable over the cited Walker and Pineda references, either alone or in combination.

Claim 17 is dependent upon Claim 14 and further requires that the mutual consent comprise means for receiving a response to the request for release of contact information from the non-requesting party. Here again, this is distinguishable over the Walker reference wherein release of contact information according to Walker occurs once the first and second party rules are met. The Walker exchange of information is automatic wherein Claim 17 specifically requires a response from the non-requesting party. Claim 17 is therefore clearly and patentably distinguishable over the Walker reference in and of itself, and is certainly allowable in view of the fact that it includes all of the limitations of Claim 14 discussed above.

Claims 200 and 204 depend directly from independent Claim 5 and each of these claims contain still further limitations relating to real time billing and payment of fees to a career site operator. These features in combination with the other novel features of the present method discussed above with respect to independent Claim 5 further patentably distinguish Claims 200 and 204.

Claim 205 is dependent upon independent Claim 5 and specifically requires that, before processing the search request, the present system makes a determination as to whether the requesting party was previously requested to provide a response to a request for release of contact information and, if it is determined that the requesting party was previously requested to respond and no response was received, then such non-responding party is precluded from further interaction with the present system until such response is provided. This procedure is clearly set

Monster Worldwide, Inc. Exhibit 1010 (p.372/1328)

forth in Figs. 3 and 11 with respect to the candidate and in Figs. 5A and 8 and 12 with respect to the employer. Actually, as soon as the candidate and employer sign in on the system, this determination is made. Clearly, no such procedure or mechanism is disclosed in either the Walker or Pineda references. This mechanism precludes abuse of the present system by a candidate or employer who does not respond to the request for release of contact information, and helps to ensure the information feedback aspects of the present invention that are absent in the marketplace of current career sites. See Figs. 3, 4, 5A, 7A, 7B, 8, 10, 11 and 12 of the present invention. Claim 205 is clearly and patentably distinguishable over all of the prior art cited against the present application including the Walker and Pineda references, either alone or in combination.

The Examiner has indicated that the cited Walker and Pineda references fail to explicitly disclose the steps recited in Claim 205. However, the Examiner has indicated that it would have been obvious to a person of ordinary skill in the art to incorporate this feature into the disclosures of Walker and Pineda with the motivation to prevent an unauthorized candidate or employer from using the system. To the contrary, the candidate and employer referred to in Claim 205 are already authorized candidates and employers. See, Figs. 3 and 8. The present system is directed to receiving responses from authorized candidates and employers once a request for contact information is issued. If an authorized candidate or an authorized employer does not respond to a previous request for release of contact information, then the present system does not allow such authorized parties to further interact with the system and receive additional search information until they have responded to all previous requests for contact information. This is clearly not shown in Walker or Pineda, and the Examiner has cited no prior art for this proposition. The assumption that the present system is preventing unauthorized users from using the system is not

Monster Worldwide, Inc. Exhibit 1010 (p.373/1328)

the case. The present system is preventing authorized users from using the system if they have not responded to a previous request. Claim 205 is clearly and patentably distinguishable over the cited prior art.

New Claim 208 is dependent upon independent Claim 5 and specifically requires that if the attributes of the requesting party does not satisfy the minimum requirements of the non-requesting party, then the present method communicates to the requesting party that at least one attribute of the requesting party does not satisfy the minimum requirements of the non-requesting party. See, Figs. 4, 7A, 7B and 10 of the present invention. This feature is not disclosed in any of the cited prior art including the cited Walker and Pineda references, either alone or in any combination.

Still further, new Claim 208 also further requires that the present system offers the opportunity to the requesting party to change its at least one non-satisfying attribute so as to satisfy the minimum requirements of the non-requesting party. See, Figs. 3 and 8 where the candidate and employer can add, edit or delete attributes and requirements associated with their respective profiles. Here again, this feature is not disclosed in any of the cited prior art. Still further, Claim 208 specifically requires that if the requesting party does change its at least one non-satisfying attributes so as to satisfy the minimum requirements of the non-requesting party, then the present method further provides for receiving a response from the non-requesting party consenting to the release of contact information. Here again, this step is not disclosed in any of the cited prior art references. For all of the above reasons, Claim 208 is clearly and patentably distinguishable over both the Walker and Pineda references, either alone or in any combination.

New Claim 209 is another independent claim along the lines of independent Claim 5 discussed above and containing many of the same distinguishing limitations as Claim 5, but new

Monster Worldwide, Inc. Exhibit 1010 (p.374/1328)

Claim 209 is specifically directed to receiving a search request from the candidate to search a searchable portion of the employer database for a possible employment opportunity. Like Claim 5, new Claim 209 specifically requires that once a request is received from the candidate to submit the candidate's contact information to at least one employer based upon the search results, the present method further determines whether the attributes of the candidate satisfy the minimum requirements of the at least one employer. As previously discussed, this further screening process is not disclosed in the cited Walker reference. Still further, new Claim 209 specifically requires that the present method receive a response from the at least one employer stating that it does desire to receive the contact information of the candidate. Here again, this is not disclosed in the Walker reference wherein release of contact information is based solely upon first and second party rules which are predetermined and preauthorized by the first and second parties. Still further, new Claim 209 specifically requires obligating a payment due in real time based on the employer's consent to receive the contact information of the candidate for each specific request and that the exchange of contact information take place thereafter. Here again, this is distinguishable over the Pineda reference for the reasons discussed above with respect to Claim 5. As such, new Claim 209 is clearly and patentably distinguishable over the cited Walker and Pineda references, either alone or in combination.

New Claim 210 is dependent upon Claim 209 and is patterned after new Claim 208 discussed above. Here again, all of these features are novel and are not disclosed in any of the prior art references cited against the present application including the Walker and Pineda references, either alone or in combination. This feedback mechanism is clearly disclosed in Figs. 3, 4, 8 and 10 of the present invention.

Monster Worldwide, Inc. Exhibit 1010 (p.375/1328)

New Claim 211 is likewise dependent upon Claim 209 and is patterned after dependent Claim 205. Here again, the steps of determining whether the candidate was previously requested to provide a response to a request for release of contact information and, if this is true, and no response was received from the candidate, then the present system precludes the authorized candidate from further interaction with the computer system until a response to the previous request for release of contact information is received from the candidate. This feature again is not disclosed in any of the cited prior art references. For all of the reasons discussed above with respect to Claim 205, Claim 211 is clearly and patentably distinguishable over the cited Walker and Pineda references.

New Claim 212 is dependent upon Claim 211 and further requires that if no response to a previous request for release of contact information is received from the candidate within a predetermined time period, then the present system communicates to the employer that no response for release of contact information was received from the candidate. This feature is disclosed in Fig. 11 of the present application for the employer and in Fig. 5A for the candidate. Here again, this is further communication with the employer regarding the status of a previous request for release of contact information. No such feature is disclosed in the cited prior art references.

New Claim 213 is dependent upon Claim 212 and further includes the step that, after communicating to the employer that no response for release of contact information was received from the candidate, then allowing the candidate to again interact with the computer system. This occurs, as set forth in Claim 212, only after a predetermined time period has elapsed. Here again, no such feature is disclosed in either the Walker of Pineda references, either alone or in combination. Claim 213 is clearly and patentably distinguishable over such references.

Monster Worldwide, Inc. Exhibit 1010 (p.376/1328)

New independent Claim 214 is patterned after new Claim 209 and differs only in that it is the employer requesting the search request. Claim 214 therefore contains the same distinguishing limitations as Claim 209 except that the candidate and employer roles have been reversed. For all of the reasons discussed above with respect to Claim 209, new Claim 214 is clearly and patentably distinguishable over the cited Walker and Pineda references, either alone or in combination.

New Claims 215, 216, 217 and 218 all depend, either directly or indirectly, upon independent 214 and these claims are patterned substantially identically after dependent Claims 210, 211, 212 and 213. For all of the reasons discussed above, dependent Claims 215-218 are clearly and patentably distinguishable over the cited Walker and Pineda references, either alone or in any combination, for the same reasons discussed above with respect to Claims 210-213.

New Claim 219 is another independent claim wherein the present system determines if either the employer or the candidate has not yet responded to a request for release of contact information and, if this is true, the present system then precludes the employer or the candidate from further interaction with the computer system until a response is provided. See, Figs. 3, 5A, 8, 11 and 12 of the present application. Claim 219 further requires communicating to the employer or candidate that a response to a request for release of contact information is required; offering the opportunity to the employer or candidate to respond to the request for release of contact information; and if the employer or candidate responds to the request for release of contact information, then determining that there is mutual consent for the release of contact information regarding such response. See, Figs. 3, 8 and 11 of the present application. Here again, this interaction between the present system and the employer or candidate is not disclosed in any of the cited prior art. Still further, Claim 219 requires obligating a payment due in real

Monster Worldwide, Inc. Exhibit 1010 (p.377/1328)

time based on the mutual consent for release of contact information and providing the exchange of contact information in real time between the candidate and the employer. Claim 219 is patterned after Claims 211, 212, 216 and 217 and all of the arguments and distinguishable features explained with respect to these claims are likewise equally applicable with respect to new Claim 219. For these and other reasons, Claim 219 is clearly and patentably distinguishable over both the Walker and Pineda references, either alone or in any combination.

New Claim 220 is another independent claim which represents a feedback loop to the candidate or employer such that when either the candidate or the employer declines the request for release of contact information, the present system then queries such candidate or employer and requests reasons why the candidate or employer declined the request for release of contact information. This disclosure is again set forth in Figs. 11 and 12 of the present application. Again, this feedback mechanism is not disclosed or suggested in any of the cited prior art references including the Walker and Pineda references, either alone or in any combination.

New independent Claim 221 contains many of the same distinguishing limitations as Claim 14 and many of the above-addressed claims but is of somewhat different scope and is also believed to be in allowable condition for the same reasons discussed above with respect to Claim 14 and new Claim 209. Claim 221 is clearly and patentably distinguishable over the cited prior art.

New Claim 222 is dependent upon new independent Claim 221 and is patterned after new Claim 210. Here again, for all of the reasons discussed above with respect to new Claim 210, Claim 222 is clearly and patentably distinguishable over the cited prior art references in that neither the Walker reference or the Pineda reference, alone or in any combination, discloses the specific steps of communicating to the requesting party that at least one attribute of the

Monster Worldwide, Inc. Exhibit 1010 (p.378/1328)

requesting party does not satisfy the minimum requirements of the non-requesting party and offering the opportunity to the requesting party to change its non-satisfying attribute in order to satisfy minimum requirements and, thereafter, if such change occurs, determining that there is mutual consent for the release of contact information.

New Claim 223 is likewise dependent upon new independent Claim 221 and further requires that the present computer system include a payment interface operable to receive payment in real time from the employer based upon the occurrence of mutual consent. Here again, this feature is not disclosed in the Pineda reference. In addition, this feature in combination with the other novel features of independent Claim 221 further patentably distinguishes Claim 223.

New Claim 224 is dependent upon Claim 14 and is likewise patterned after new Claims 210 and 222. For all of the reasons discussed above, Claim 224 is clearly and patentably distinguishable over the cited prior art.

New Claim 225 is dependent upon Claim 5 and is also patterned after new Claim 205 except that the determining step is made with respect to the non-requesting party and if the non-requesting party has not previously responded to a request for release of contact information, the non-requesting party is precluded from further interaction with the system until a response is provided. See, Figs. 3 and 8 of the present invention. Again, nothing similar is disclosed in the cited prior art. For all of the reasons discussed above, Claim 225 is clearly and patentably distinguishable over the cited prior art.

As discussed above, none of the cited prior art references including the Walker and Pineda references provide any teachings relating to the specific method steps and system features relating to determining whether certain attributes of the requesting party satisfy minimum

Monster Worldwide, Inc. Exhibit 1010 (p.379/1328)

requirements of the non-requesting party; receiving a specific response from the non-requesting party consenting to the release of contact information (not automatic transmittal based upon first and second party rules); obligating a payment in real time based upon mutual consent; actually receiving payment in real time before transmitting the release of contact information; preventing an authorized candidate or employer from further interaction with the system if such candidate or employer has not responded to a previous request to provide a response to the release of contact information; offering the opportunity to either the candidate or employer to change at least one non-satisfying attribute so as to satisfy the minimum requirements of the non-requesting party; communicating with the employer that no response for release of contact information was received from the candidate; and after a predetermined period of time, and after communicating to either the candidate or employer that no response for release of contact information was received, then allowing either the candidate or employer to again interact with the system. More specifically, there is no teaching or suggestion in any one or more of the cited prior art references, alone or in any combination, which remotely suggests or even hints at the specific system features identified in the presently pending claims. The system and method of the present invention is much more sophisticated and interactive with both the candidate and employer and provides a novel and useful method of doing business, and sets forth a patentably distinguishable computer system and method for authorizing information exchanged between at least one candidate and at least one employer prior to any direct contact between such candidate and employer.

All of the additional limitations set forth in the Claims presently pending in the application have support in the present application and in the drawings as indicated above. No new matter has been added to any of the pending claims.

Monster Worldwide, Inc. Exhibit 1010 (p.380/1328)

Applicant now believes that the above amendments and remarks place the present application in condition for allowance and that all of the claims now pending in the present application contain limitations which patentably distinguish them over the cited prior art. Allowance is hereby respectfully requested.

If any issue regarding the allowability of any of the pending claims in the present application could be readily resolved, or if other action could be taken to further advance this application such as an Examiner's amendment, or if the Examiner should have any questions regarding the present amendment, it is respectfully requested that the Examiner please telephone Applicant's undersigned attorney in this regard.

Respectfully submitted,

Date: 20 APR 06

Samuel Digirolamo
Reg. No. 29,915
Blackwell Sanders Peper Martin LLP
720 Olive Street, Suite 2400
St. Louis, MO 63101
314-345-6000
ATTORNEYS FOR APPLICANT

Monster Worldwide, Inc. Exhibit 1010 (p.381/1328)

Electronic Acknowledgement Receipt

EFS ID:	1027156
Application Number:	10101644
Confirmation Number:	8626
Title of Invention:	Apparatus and methods for providing career and employment services
First Named Inventor:	Marc Vianello
Customer Number:	27128
Filer:	Samuel Digirolamo/Jennifer Birmingham
Filer Authorized By:	Samuel Digirolamo
Attorney Docket Number:	15703.10002
Receipt Date:	20-APR-2006
Filing Date:	19-MAR-2002
Time Stamp:	14:18:25
Application Type:	Utility
International Application Number:	

Payment information:

Submitted with Payment	no

File Listing:

Document Number	Document Description	File Name	File Size(Bytes)	Multi Part	Pages
1		1570310002.pdf	9926470	yes	70

	Multipart Description		
	Doc Desc	**Start**	**End**
	Supplemental Response or Supplemental Amendment	1	1
	Claims	2	51
	Applicant Arguments/Remarks Made in an Amendment	52	70
Warnings:			
Information:			
	Total Files Size (in bytes):	9926470	

This Acknowledgement Receipt evidences receipt on the noted date by the USPTO of the indicated documents, characterized by the applicant, and including page counts, where applicable. It serves as evidence of receipt similar to a Post Card, as described in MPEP 503.

New Applications Under 35 U.S.C. 111
If a new application is being filed and the application includes the necessary components for a filing date (see 37 CFR 1.53(b)-(d) and MPEP 506), a Filing Receipt (37 CFR 1.54) will be issued in due course and the date shown on this Acknowledgement Receipt will establish the filing date of the application.

National Stage of an International Application under 35 U.S.C. 371
If a timely submission to enter the national stage of an international application is compliant with the conditions of 35 U.S.C. 371 and other applicable requirements a Form PCT/DO/EO/903 indicating acceptance of the application as a national stage submission under 35 U.S.C. 371 will be issued in addition to the Filing Receipt, in due course.

UNITED STATES PATENT AND TRADEMARK OFFICE

UNITED STATES DEPARTMENT OF COMMERCE
United States Patent and Trademark Office
Address: COMMISSIONER FOR PATENTS
P.O. Box 1450
Alexandria, Virginia 22313-1450
www.uspto.gov

APPLICATION NO.	FILING DATE	FIRST NAMED INVENTOR	ATTORNEY DOCKET NO.	CONFIRMATION NO.
10/101,644	03/19/2002	Marc Vianello	15703.10002	8626

27128 7590 04/12/2006

BLACKWELL SANDERS PEPER MARTIN LLP
720 OLIVE STREET
SUITE 2400
ST. LOUIS, MO 63101

EXAMINER
JEANTY, ROMAIN

ART UNIT	PAPER NUMBER
3623	

DATE MAILED: 04/12/2006

Please find below and/or attached an Office communication concerning this application or proceeding.

PTO-90C (Rev. 10/03)

Notice of Non-Compliant Amendment (37 CFR 1.121)	Application No.	Applicant(s)	
	10/101,644	VIANELLO, MARC	
	Examiner	Art Unit	
	Romain Jeanty	3623	

-- The MAILING DATE of this communication appears on the cover sheet with the correspondence address --

The amendment document filed on *23 January 2006* is considered non-compliant because it has failed to meet the requirements of 37 CFR 1.121 or 1.4. In order for the amendment document to be compliant, correction of the following item(s) is required.

THE FOLLOWING MARKED (X) ITEM(S) CAUSE THE AMENDMENT DOCUMENT TO BE NON-COMPLIANT:

- ☐ 1. Amendments to the specification:
  - ☐ A. Amended paragraph(s) do not include markings.
  - ☐ B. New paragraph(s) should not be underlined.
  - ☐ C. Other _____.
- ☐ 2. Abstract:
  - ☐ A. Not presented on a separate sheet. 37 CFR 1.72.
  - ☐ B. Other _____.
- ☐ 3. Amendments to the drawings:
  - ☐ A. The drawings are not properly identified in the top margin as "Replacement Sheet," "New Sheet," or "Annotated Sheet" as required by 37 CFR 1.121(d).
  - ☐ B. The practice of submitting proposed drawing correction has been eliminated. Replacement drawings showing amended figures, without markings, in compliance with 37 CFR 1.84 are required.
  - ☐ C. Other _____.
- ☒ 4. Amendments to the claims:
  - ☐ A. A complete listing of all of the claims is not present.
  - ☐ B. The listing of claims does not include the text of all pending claims (including withdrawn claims)
  - ☐ C. Each claim has not been provided with the proper status identifier, and as such, the individual status of each claim cannot be identified. Note: the status of every claim must be indicated after its claim number by using one of the following status identifiers: (Original), (Currently amended), (Canceled), (Previously presented), (New), (Not entered), (Withdrawn) and (Withdrawn-currently amended).
  - ☐ D. The claims of this amendment paper have not been presented in ascending numerical order.
  - ☒ E. Other: *See Continuation Sheet*.
- ☐ 5. Other (e.g., the amendment is unsigned or not signed in accordance with 37 CFR 1.4):

_____

For further explanation of the amendment format required by 37 CFR 1.121, see MPEP § 714.

TIME PERIODS FOR FILING A REPLY TO THIS NOTICE:

1. Applicant is given **no new time period** if the non-compliant amendment is an after-final amendment or an amendment filed after allowance. If applicant wishes to resubmit the non-compliant after-final amendment with corrections, the **entire corrected amendment** must be resubmitted.

2. Applicant is given **one month**, or thirty (30) days, whichever is longer, from the mail date of this notice to supply the correction, if the non-compliant amendment is one of the following: a preliminary amendment, a non-final amendment (including a submission for a request for continued examination (RCE) under 37 CFR 1.114), a supplemental amendment filed within a suspension period under 37 CFR 1.103(a) or (c), and an amendment filed in response to a *Quayle* action. If any of above boxes 1. to 4. are checked, the correction required is only the **corrected section** of the non-compliant amendment in compliance with 37 CFR 1.121.

   Extensions of time are available under 37 CFR 1.136(a) only if the non-compliant amendment is a non-final amendment or an amendment filed in response to a *Quayle* action.

   Failure to timely respond to this notice will result in:
   Abandonment of the application if the non-compliant amendment is a non-final amendment or an amendment filed in response to a *Quayle* action; or
   Non-entry of the amendment if the non-compliant amendment is a preliminary amendment or supplemental amendment.

_____ _____

Legal Instruments Examiner (LIE), if applicable Telephone No.

Continuation of 4(e) Other: The identifier "Previously Amended" of claim 205 should be "Currently Amended". It is further suggested that applicant reviews all ther other claims to asuure that the identifiers are correct.

Romain Jeanty
Primary Examiner
Art Unit 3623

OIPE IAP64
JAN 23 2006
PATENT & TRADEMARK OFFICE

IN THE UNITED STATES PATENT AND TRADEMARK OFFICE

Application of: Marc Vianello	:	
	:	Examiner: Romain Jeanty
Serial No.: 10/101,644	:	Group Art Unit: 3623
Filed: March 19, 2002	:	Attorney Docket No.: 15703.10002
For: APPARATUS AND METHODS FOR PROVIDING CAREER EMPLOYMENT SERVICES	:	Customer No.: 027128
	:	Confirmation No.: 8626
Last Office Action: November 10, 2005	:	

AMENDMENT F

Mail Stop Amendment
Commissioner for Patents
P.O. Box 1450
Alexandria, VA 22313-1450

Sir:

In response to the Office Action mailed November 10, 2005, please amend the above-identified application in accordance with the amendments and remarks as set forth herein.

Amendments to the Claims are reflected in the listing of claims which begin on page 2 of this document.

Remarks/Arguments begin on page 52 of this document.

01/25/2006 CCHAU1 00000034 110160 10101644
01 FC:2202 275.00 DA
02 FC:2201 100.00 DA

AMENDMENTS TO THE CLAIMS:

This listing of claims will replace all prior revisions, and listings, of claims in the application.

Listing of Claims:

1. (Withdrawn) A system for collecting and classifying information using a structured information format, said system comprising:

an employment management system configured to provide continuous recruiting and continuous career enhancement by providing a search interface to a plurality of job descriptions and to a plurality of blind resumés, wherein employers provide said job descriptions and talent provide talent information corresponding to said blind resumés.

2. (Withdrawn) The system as set forth in claim 1, wherein personal contact information corresponding to at least one selected resumé is provided to said employers after said employers agree to purchase said personal contact information.

3. (Withdrawn) The system as set forth in claim 1, wherein said employers are provided an opportunity to purchase personal contact information corresponding to at least one selected resumé if a selected talent corresponding to said selected resumé indicates consent.

4. (Withdrawn) The system as set forth in claim 3, wherein said consent is indicated by specifying at least one preferred employer.

5. (Currently Amended) A method executed by a computer processor~~,~~ for authorizing information exchange between at least one ~~candidate~~ of a plurality of ~~talent contributors~~ candidates and at least one of a plurality of employers prior to any direct contact between said candidate and said employer, said candidate having one or more candidate attributes including candidate minimum requirements, ~~and~~ said employer having one or more employer attributes including employer minimum requirements, said one or more candidate attributes and minimum requirements including a searchable profile being stored in a candidate database, and said one or more employer attributes and minimum requirements including a searchable profile being stored in an employer database, said method comprising:

Monster Worldwide, Inc. Exhibit 1010 (p.388/1328)

~~programmatically matching said candidate with said employer based on said candidate requirements and said employer requirements;~~

receiving a search request from either said candidate or said employer to search the searchable profile of one of the candidate and employer databases for a possible employment opportunity based upon certain search parameters;

processing the search request and providing the results to the requesting one of said candidate and said employer;

receiving ~~a~~ at least one request for release of contact information from ~~either~~ the requesting one of said candidate ~~or~~ and said employer based upon the search results;

determining that the attributes of the requesting one of said ~~whether there is mutual consent for the release of contact information regarding the~~ candidate ~~for each specific request~~ and said employer satisfy the minimum requirements of a non-requesting candidate or employer stored in the candidate and employer databases;

receiving a response from said non-requesting candidate or employer consenting to the release of the contact information of said candidate or said employer to said requesting party;

obligating a payment due ~~from said employer~~ in real time based on the ~~mutual consent~~ response to said request for release of contact information ~~for each specific request~~ wherein said payment due is a fee to a career site operator; and

providing exchange of contact information in real time prior to any direct contact between said candidate and said employer.

6. (Previously Presented) The method as set forth in claim 5, wherein said information exchange is the release of contact information, prior to any direct contact between the parties.

7. (Cancelled)

8. (Cancelled)

Monster Worldwide, Inc. Exhibit 1010 (p.389/1328)

9. (Cancelled).

10. (Previously Presented) The method as set forth in claim 5, wherein an amount of said obligation is chosen from a general equivalency diploma amount, a high school amount, a vocational educational training amount, an associate degree amount, a bachelor degree amount, a master degree amount, and a doctorate amount, wherein said doctorate amount is greater than or equal to said master degree amount, which is greater than or equal to said bachelor degree amount, which is greater than or equal to said associate degree amount, which is greater than or equal to said vocational educational training amount, which is greater than or equal to said high school amount, which is greater than or equal to said general equivalency diploma amount.

11. (Cancelled)

12. (Cancelled)

13. (Cancelled)

14. (Currently Amended) A distributed network for facilitating the exchange of contact information between at least one of ~~candidate in~~ a plurality of ~~talent contributors~~ candidates and at least one ~~employer in~~ of a plurality of employers, said candidate having one or more candidate attributes including candidate minimum requirements, and said employer having one or more employer attributes including employer minimum requirements, said distributed network comprising:

means for managing enterprise database resources;

means for storing the candidate attributes and requirements in a candidate database and providing at least a portion of the candidate database to be searched by said candidate and said employer;

means for storing the employer attributes and requirements in an employer database and providing at least a portion of the employer database to be searched by said candidate and said employer;

Monster Worldwide, Inc. Exhibit 1010 (p.390/1328)

means for receiving a search request from either said candidate or said employer to search the searchable portion of one of the candidate and employer databases for a possible employment opportunity based upon certain search parameters;

means for processing the search request and providing the results thereof to the requesting one of said candidate and said employer;

~~means for matching said candidate with said employer based on said candidate requirements and said employer requirements;~~

means for receiving a request for release of contact information from ~~either~~ the requesting one of said candidate ~~or~~ and said employer based upon the search results;

means for determining that the attributes of the requesting one of said candidate and said employer satisfy the minimum requirements of a non-requesting candidate or employer;

means for determining ~~whether~~ that there is mutual consent ~~to said request~~ for release of contact information ~~for each specific request prior to any direct contact between said~~ regarding the candidate ~~and said employer~~; ~~and~~

means for computing a payment fee to the career site operator ~~from said employer~~ in real time based on the mutual consent ~~to said request~~ for the release of contact information ~~for each specific request.~~;

means for obligating the payment fee in real time to the career site operator;

means for collecting said payment fee in real time; and

means for providing the exchange of contact information in real time prior to any direct contact between said candidate and said employer.

15. (Cancelled)

16. (Cancelled).

Monster Worldwide, Inc. Exhibit 1010 (p.391/1328)

17. (Currently Amended) The distributed network as recited in claim 14~~,~~ wherein said means for determining ~~whether~~ that there is mutual consent further comprises means for receiving a response to said request for release of contact information from the non requesting one of said candidate and said employer.

18. (Withdrawn) A method of receiving information regarding at least one candidate from a plurality of talent-contributors, said candidate having candidate attributes, said method comprising:

receiving personal information associated with said candidate;

receiving experience information regarding said candidate, said experience information relating to skills attributes; and

receiving skills descriptions corresponding to said skills attributes.

19. (Withdrawn) The method as set forth in claim 18, wherein said receiving personal information further comprises maintaining records of said personal information.

20. (Withdrawn) The method as set forth in claim 18, wherein said personal information includes a name, a physical address, an electronic address, and a minimum compensation requirement of said candidate.

21. (Withdrawn) The method as set forth in claim 20, wherein said physical address is maintained in a consistent format.

22. (Withdrawn) The method as set forth in claim 20 further comprising identifying a nearest metropolitan area to said physical address, wherein said nearest metropolitan area is further designated as a metropolitan statistical area, a primary metropolitan statistical area, or a consolidated metropolitan statistical area.

23. (Withdrawn) The method as set forth in claim 18, wherein said candidate attributes include career information regarding at least one past position of said candidate, said career information selected from structured occupational data operable to be matched with employer information pertaining to prospective employers.

Monster Worldwide, Inc. Exhibit 1010 (p.392/1328)

24. (Withdrawn) The method as set forth in claim 23, wherein said structured occupational data includes at least one occupational title obtained from the Dictionary of Occupational Titles.

25. (Withdrawn) The method as set forth in claim 23, wherein said structured occupational data further comprises a reason said candidate is no longer employed in said past position.

26. (Withdrawn) The method as set forth in claim 23, wherein said candidate attributes include industry information regarding said past position of said candidate, said career information selected from structured industry data operable to be matched with said employer information.

27. (Withdrawn) The method as set forth in claim 26, wherein said industry information further comprises a reason said candidate is no longer employed in said past position.

28. (Withdrawn) The method as set forth in claim 18, wherein said candidate attributes include structured industry data comprising classifications identified in the North American Industry Classification System.

29. (Withdrawn) The method as set forth in claim 28, wherein said classifications relate to at least one past position of said candidate.

30. (Withdrawn) The method as set forth in claim 29, wherein said candidate provides descriptions of accomplishments of said candidate in said past position.

31. (Withdrawn) The method as set forth in claim 18 further comprising:

storing said personal information about said candidate in a memory; and

providing access to said candidate attributes, said access operable to facilitate generation of reports regarding said plurality of talent-contributors.

32. (Withdrawn) The method as set forth in claim 23, wherein said candidate provides information regarding compensation received by said candidate with respect to said past position.

33. (Withdrawn) The method as set forth in claim 31, wherein said personal information further comprises self-identification information including at least one of:

Monster Worldwide, Inc. Exhibit 1010 (p.393/1328)

race-information regarding said candidate;

gender-information regarding said candidate;

citizenship-information regarding said candidate; and

lawful eligibility to work in at least one country.

34. (Withdrawn) The method as set forth in claim 33, wherein said self-identification information is received on an optional basis.

35. (Withdrawn) The method as set forth in claim 33 further comprising providing said self-identification information to prospective employers to enable said prospective employers to comply with job-applicant-reporting requirements.

36. (Withdrawn) The method as set forth in claim 18 further comprising receiving educational-background information associated with at least one educational institution which said candidate has attended.

37. (Withdrawn) The method as set forth in claim 36, wherein said educational information further comprises a name of said educational institution, a level of education expected or attained, and at least one field of study.

38. (Withdrawn) The method as set forth in claim 18 further comprising receiving affiliation information corresponding to affiliations of said candidate, said affiliations including membership in at least one organization in a plurality of occupation-oriented organizations.

39. (Withdrawn) The method as set forth in claim 38, wherein said occupation-oriented organizations comprise professional associations, trade associations, and labor unions.

40. (Withdrawn) The method as set forth in claim 18, wherein said candidate attributes include desired-career information regarding at least one desired-career position.

41. (Withdrawn) The method as set forth in claim 40, wherein said desired-career information includes a designation of at least one preferred employer.

Monster Worldwide, Inc. Exhibit 1010 (p.394/1328)

42. (Withdrawn) The method as set forth in claim 18 further comprising suggesting possible job descriptions to said candidate based on said candidate attributes.

43. (Withdrawn) The method as set forth in claim 18, wherein said skills descriptions relate to language skills, analytical skills, people and communication skills, and mechanical skills of said candidate.

44. (Withdrawn) The method as set forth in claim 43, wherein said language skills include reading, writing, and speaking.

45. (Withdrawn) The method as set forth in claim 44, wherein said description of said reading, writing, and speaking skills includes an assessment of proficiency in said skills.

46. (Withdrawn) The method as set forth in claim 43, wherein said analytical skills, people and communication skills, and mechanical skills correspond to said skills attributes described in the Dictionary of Occupational Titles.

47. (Withdrawn) The method as set forth in claim 46, wherein said skills descriptions comprise descriptions of nature, use, and proficiency of skills associated with said skills descriptions.

48. (Withdrawn) The method as set forth in claim 46, wherein skills associated with said skills descriptions correspond to a skills coding system of the Dictionary of Occupational Titles.

49. (Withdrawn) The method as set forth in claim 18 further comprising receiving an identification of licenses and certifications held by said candidate.

50. (Withdrawn) The method as set forth in claim 18 further comprising receiving a description of professional and personal accomplishments of said candidate.

51. (Withdrawn) The method as set forth in claim 18 further comprising receiving an indication of an interest level of said candidate in obtaining new employment.

52. (Withdrawn) A computer system including computer-readable instructions for receiving talent information regarding talent, said talent having talent faculties, said computer system comprising:

Monster Worldwide, Inc. Exhibit 1010 (p.395/1328)

at least one memory in which said computer-readable instructions reside;

a processor operable to execute said computer-readable instructions;

a communications adapter operable to receive said talent information from said talent, said communications adapter operative to communicate a portion of said talent information to a plurality of employers;

wherein said communications adapter is configured to receive contact data associated with said talent; and

wherein said communications adapter is further configured to receive background information regarding said talent, said background information including affiliation information corresponding to affiliations of said talent, said affiliations including membership in at least one occupation-oriented organization.

53. (Withdrawn) The computer system as set forth in claim 52, wherein said contact data includes a name and an E-mail address.

54. (Withdrawn) The computer system as set forth in claim 52, wherein said background information further comprises self-identification information including at least one of:

information regarding race of said talent;

information regarding gender of said talent;

information regarding citizenship of said talent; and

information regarding employment eligibility.

55. (Withdrawn) The computer system as set forth in claim 54 further comprising a data interface configured to provide said self-identification information to said employers to enable said employers to comply with job applicant reporting requirements.

56. (Withdrawn) The computer system as set forth in claim 52, wherein said talent faculties further comprise information regarding at least one of past employment, formal education, informal training, and a description of proficiency in a predetermined set of skills.

Monster Worldwide, Inc. Exhibit 1010 (p.396/1328)

57. (Withdrawn) The computer system as set forth in claim 52, wherein said talent faculties further comprise information regarding membership in at least one occupation-oriented organization.

58. (Withdrawn) The computer system as set forth in claim 52, wherein said communications adapter is further configured to receive desired-position information regarding a career position specified by said talent.

59. (Withdrawn) The computer system as set forth in claim 58, wherein said desired-position information includes a designation of at least one preferred employer.

60. (Withdrawn) The computer system as set forth in claim 52, wherein said talent faculties include work experience as embodied in past-employment information, said past-employment information associated with skills attributes, said skills attributes described by skills descriptions.

61. (Withdrawn) The computer system as set forth in claim 60, wherein said skills descriptions include an assessment of proficiency.

62. (Withdrawn) A distributed network for providing employers with candidate-information regarding at least one candidate in a plurality of talent-contributors, said candidate having candidate attributes, said distributed network comprising:

means for managing enterprise human resource data;

means for receiving personal information associated with said candidate;

means for receiving career information regarding at least one past career position of said candidate, said career information operable to be matched with employer information pertaining to prospective employers of said candidate, wherein at least a portion of said career information as associated with said enterprise human resource data;

means for receiving experience information regarding said candidate, said experience information associated with experiences gained by said candidate, said experiences relating to skills attributes and said experiences of relevance to said prospective employers;

Monster Worldwide, Inc. Exhibit 1010 (p.397/1328)

means for obtaining consent of said candidate to release of said personal information of said candidate to at least one of said prospective employers; and

means for providing said personal information to said at least one of said prospective employers based on said consent.

63. (Withdrawn) The distributed network as recited in claim 62 further comprising means for providing an interface to said candidate attributes, said interface operable to facilitate generation of reports regarding said plurality of talent-contributors.

64. (Withdrawn) The distributed network as recited in claim 63, wherein said personal information further comprises self-identification information including at least one of: information regarding race of said candidate;

information regarding gender of said candidate;

information regarding citizenship of said candidate; and

lawful eligibility to work in at least one country.

65. (Withdrawn) The method according to claim 64, wherein said self-identification information is received on an optional basis.

66. (Withdrawn) The distributed network as recited in claim 64 further comprising means for providing said self-identification information to said prospective employers to enable said prospective employers to comply with job applicant reporting requirements, wherein said self-identification information is provided to said prospective employers after said prospective employers have made hiring decisions regarding said candidate, whereby said self-identification information cannot be used impermissibly by said prospective employers to discriminate against said candidate.

67. (Withdrawn) The distributed network as recited in claim 62 wherein said experience information is categorized based on a data dictionary of job descriptions.

68. (Withdrawn) The distributed network as recited in claim 62, wherein said candidate attributes include at least one desired career position.

Monster Worldwide, Inc. Exhibit 1010 (p.398/1328)

69. (Withdrawn) The distributed network as recited in claim 62, wherein said candidate attributes further include a designation of at least one preferred employer.

70. (Withdrawn) A method of receiving information regarding an employer including employer profile information and at least one job description, said job description having job parameters corresponding to candidate attributes of a desired candidate, said method comprising:

receiving desired experience information regarding said desired candidate, said desired experience information relating to a structured set of desired skills attributes; and

receiving desired skills descriptions corresponding to said desired skills attributes.

71. (Withdrawn) The method as set forth in claim 70 further comprising:

receiving a multiple-division indication regarding an existence of multiple divisions associated with said employer;

receiving geographical information associated with at least one of said multiple divisions;

receiving user information regarding at least one employer-user to be associated with an employer account corresponding to said employer; and

for each of said at least one employer-user receiving access scope information, said access scope information specifying a scope of access associated with said at least one employer-user.

72. (Withdrawn) The method as set forth in claim 71, wherein a division in said multiple divisions is further divided into successively smaller divisions.

73. (Withdrawn) The method as set forth in claim 70, wherein said employer profile information includes employer name, phone number, physical address, billing information, and administrative user information.

Monster Worldwide, Inc. Exhibit 1010 (p.399/1328)

74. (Withdrawn) The method as set forth in claim 71, wherein said geographical information is maintained in a consistent format.

75. (Withdrawn) The method as set forth in claim 71, wherein receiving said geographical information further comprises identifying a nearest metropolitan area associated with a geographical location associated with said multiple divisions of said employer, wherein said nearest metropolitan area is further designated as a metropolitan statistical area, a primary metropolitan statistical area, or a consolidated metropolitan statistical area.

76. (Withdrawn) The method as set forth in claim 71, wherein said job description is associated with a division within said multiple divisions.

77. (Withdrawn) The method as set forth in claim 70, wherein said job description further comprises:

a confidential maximum compensation said employer has allocated for a job;

a number of total employment positions associated with said job description; and

a number of open employment positions associated with said number of total employment positions.

78. (Withdrawn) The method as set forth in claim 70, wherein said employer profile information includes structured industry data operable to be matched with career information pertaining to prospective employees.

79. (Withdrawn) The method as set forth in claim 78, wherein said structured industry data includes classifications identified in the North American Industry Classification System.

80. (Withdrawn) The method as set forth in claim 70, wherein said job description further comprises:

a Federal Employment Records Information requirement indication regarding whether said job description is associated with an employment position for which self-identification information should be maintained.

Monster Worldwide, Inc. Exhibit 1010 (p.400/1328)

81. (Withdrawn) The method as set forth in claim 70, wherein said job description further comprises a regulated job requirement indication regarding whether said job description is associated with an employment position for which said candidate attributes are subject to government regulation.

82. (Withdrawn) The method as set forth in claim 70, wherein said job description further comprises a narrative description of functions to be performed in a job associated with said job description.

83. (Withdrawn) The method as set forth in claim 70, wherein said job description further comprises benefit descriptions and compensation figures offered by said employer in connection with a job associated with said job description, wherein said compensation figures include a maximum compensation amount.

84. (Withdrawn) The method as set forth in claim 83, wherein said maximum compensation amount is confidential.

85. (Withdrawn) The method as set forth in claim 81, wherein said government regulation includes a restriction pertaining to citizenship.

86. (Withdrawn) The method as set forth in claim 71, wherein said employer profile information includes information regarding organizations with which said employer is affiliated.

87. (Withdrawn) A computer system for receiving employer information regarding an employer having at least one division, said computer system comprising:

a check box operable to receive a multiple-division indication regarding an existence of multiple divisions associated with said employer;

a geographical interface configured to receive geographical information associated with at least one of said multiple divisions associated with said employer; and

a user interface operable to receive user information regarding at least one employer-user to be associated with an employer account corresponding to said employer, wherein said user interface is operable to receive access scope information for

Monster Worldwide, Inc. Exhibit 1010 (p.401/1328)

said employer-user, said access scope information specifying a scope of access associated with said employer-user.

88. (Withdrawn) The computer system as set forth in claim 87, wherein said geographical interface is further configured to receive said geographical information by identifying a nearest metropolitan area associated with said multiple divisions.

89. (Withdrawn) The computer system as set forth in claim 87 further comprising a structured form operable to receive at least one job description associated with said division.

90. (Withdrawn) The computer system as set forth in claim 89, wherein said structured form further comprises:

a first numerical input cell operable to receive a number corresponding to a maximum allocated compensation for said job description;

a second numerical input cell operable to receive a number of total employment positions associated with said job description; and

a third numerical input cell operable to receive a number of open employment positions associated with said number of total employment positions.

91. (Withdrawn) A distributed network for receiving employer profile information regarding an employer having at least one business unit, said distributed network comprising:

means for maintaining enterprise human resource information;

means for receiving a multiple-division indication regarding an existence of multiple divisions associated with said employer;

means for receiving geographical information associated with at least one of said multiple divisions;

means for receiving user information regarding at least one employer-user to be associated with an employer account corresponding to said employer;

means for receiving access scope information for each of said at least one

Monster Worldwide, Inc. Exhibit 1010 (p.402/1328)

employer-user, said access scope information specifying a scope of access associated with said at least one employer-user.

92. (Withdrawn) The distributed network as recited in claim 91, wherein said geographical information is maintained in a consistent format.

93. (Withdrawn) The distributed network as recited in claim 91, wherein said means for receiving said geographical information further comprises means for identifying a nearest metropolitan area associated with a geographical location associated with said multiple divisions of said employer.

94. (Withdrawn) The distributed network as recited in claim 91 further comprising means for receiving at least one job description associated with said at least one business unit.

95. (Withdrawn) The distributed network as recited in claim 94, wherein said means for receiving at least one job description further comprises:

means for receiving a number of total employment positions associated with said job description; and

means for receiving a number of open employment positions associated with said number of total employment positions.

96. (Withdrawn) A method of searching a plurality of job descriptions, said method performed by a talent-user, and said method comprising:

accessing a talent profile associated with said talent-user, said talent profile including talent-threshold requirements;

identifying target job descriptions associated with prospective employers based on said talent profile, said target job descriptions having job-threshold requirements;

comparing said talent profile with said job-threshold requirements, whereby a threshold comparison results; and

determining whether at least one of said target job descriptions is compatible with said talent profile, based on said threshold comparison.

Monster Worldwide, Inc. Exhibit 1010 (p.403/1328)

97. (Withdrawn) A method of searching a plurality of job descriptions, said method performed by a talent-user, and said method comprising:

receiving search parameters from said talent-user;

identifying target job descriptions associated with prospective employers based on said search parameters, said target job descriptions having job-threshold requirements;

comparing at least one talent profile with said job-threshold requirements, whereby a threshold comparison results; and

determining whether at least one of said target job descriptions is compatible with said talent profile, based on said threshold comparison.

98. (Withdrawn) The method as set forth in claim 97 further comprising:

receiving from said talent-user an indication regarding whether to perform a foreign search for said target job descriptions located outside of a specified geographic location; and

providing job description information corresponding to said target job descriptions that occur outside of a primary location country associated with said talent-user.

99. (Withdrawn) The method as set forth in claim 97, wherein said search parameters include a minimum compensation requirement.

100. (Withdrawn) The method as set forth in claim 97 further comprising:

receiving a request for interview with a target employer from said talent-user; and

transmitting said request for interview to said target employer.

101. (Withdrawn) The method as set forth in claim 100 further comprising:

receiving a request-acceptance indication from said target employer regarding whether said target employer accepts said request for interview; and

providing a questionnaire to said target employer regarding said request-acceptance indication based on a negative value of said request-acceptance indication.

Monster Worldwide, Inc. Exhibit 1010 (p.404/1328)

102. (Withdrawn) The method as set forth in claim 101 further comprising:

inactivating an account associated with said target employer based on a failure to respond to said questionnaire; and

reactivating said account based on a subsequent response to said questionnaire.

103. (Withdrawn) The method as set forth in claim 102 further comprising:

reactivating said account based on passage of a predetermined period of time.

104. (Withdrawn) The method as set forth in claim 97, wherein said search parameters further include at least one search timing parameter, including:

a start time and a search frequency.

105. (Withdrawn) The method as set forth in claim 104, wherein said search frequency is once per day.

106. (Withdrawn) The method as set forth in claim 97 further comprising providing said talent-user with an opportunity to modify said search parameters and said talent profile if said threshold comparison indicates that said talent profile does not match said job-threshold requirements.

107. (Withdrawn) The method as set forth in claim 97 further comprising providing said talent-user with a list of job descriptions for which said talent profile matches said job-threshold requirements.

108. (Withdrawn) The method as set forth in claim 107, wherein said list of job descriptions is ordered by compensation offered in connection with a particular job.

109. (Withdrawn) The method as set forth in claim 108, wherein said list of job descriptions is further ordered by geographic proximity to a geographic location specified in said search parameters.

110. (Withdrawn) A data processing apparatus for searching a plurality of job descriptions, said apparatus operable to communicate with a talent-user, said apparatus comprising:

an application server configured to provide a user interface operative to receive an instruction to search from said talent-user, said user interface further operative to

Monster Worldwide, Inc. Exhibit 1010 (p.405/1328)

receive search parameters from said talent-user;

at least one memory operable to store and provide access to a talent profile associated with said talent-user, said talent profile including talent-threshold requirements;

a search engine configured to access said talent profile and said search parameters;

a filter operable to identify target job descriptions based on said search parameters, said target job descriptions having job-threshold requirements; and

a comparator, coupled with said search engine, operable to compare said talent profile to said job-threshold requirements, whereby a threshold comparison results.

111. (Withdrawn) The apparatus as set forth in claim 110, wherein said comparator is a processor programmed to compare sets of data having a consistent nomenclature.

112. (Withdrawn) The apparatus as set forth in claim 110, wherein said talent-threshold requirements further include a minimum compensation requirement.

113. (Withdrawn) The apparatus as set forth in claim 110 further comprising:

an input form configured to receive a request for interview with a target employer from said talent-user; and

a message processor programmed to transmit said request for interview to said target employer.

114. (Withdrawn) The apparatus as set forth in claim 113, wherein said message processor is further programmed to receive a request-declined indication from said target employer regarding whether said target employer accepts said request for interview, and wherein said message processor is further programmed to provide a questionnaire to said target employer regarding said request-declined indication.

115. (Withdrawn) The apparatus as set forth in claim 114 further comprising a processor programmed to inactivate an account associated with said target employer based on a failure to respond to

Monster Worldwide, Inc. Exhibit 1010 (p.406/1328)

said questionnaire, wherein said processor is further programmed to reactivate said account based on a subsequent response to said questionnaire.

116. (Withdrawn) The apparatus as set forth in claim 115, wherein said processor is further programmed to reactivate said account based on passage of a predetermined period of time.

117. (Withdrawn) The apparatus as set forth in claim 110, wherein said instruction to search further includes at least one search timing parameter, including at least one of:

a start time and a search frequency.

118. (Withdrawn) The apparatus set forth in claim 117, wherein said search frequency is once per day.

119. (Withdrawn) The apparatus as set forth in claim 110, wherein said user interface is further operable to provide said talent-user with an opportunity to modify talent compensation requirements if said threshold comparison indicates that talent compensation requirements do not match said job-threshold requirements.

120. (Withdrawn) The apparatus as set forth in claim 110, wherein said user interface is further operable to provide said talent-user with a list of job descriptions for which said search parameters match said job-threshold requirements.

121. (Withdrawn) The apparatus as set forth in claim 120, wherein said list of job descriptions are ordered by compensation offered in connection with a particular job.

122. (Withdrawn) The apparatus as set forth in claim 121, wherein said list of job descriptions are further ordered by geographic proximity to a geographical location specified in said search parameters.

123. (Withdrawn) A network for searching a plurality of job descriptions, said network operable to receive talent-information from a talent-user, said network comprising:

means for managing enterprise human resource data;

means for receiving job search parameters from said talent-user;

Monster Worldwide, Inc. Exhibit 1010 (p.407/1328)

means for storing at least one set of job search parameters associated with an ideal job for said talent-user;

means for accessing said set of job search parameters and a talent profile associated with said ideal job, said talent profile including a minimum compensation requirement;

means for identifying target job descriptions, based on said set of job search parameters and said talent profile, said target job descriptions having a maximum compensation allowance associated with an employer; and

means for comparing said minimum compensation requirement of said talent-user to said maximum compensation allowance of said employer, whereby a compensation comparison results, and wherein said means for comparing determines whether said talent profile is compatible with at least one of said target job descriptions.

124. (Withdrawn) The network as recited in claim 123, wherein at least one of said job search parameters is a geographic location.

125. (Withdrawn) The network as recited in claim 123 further comprising:

means for receiving a request for interview with said employer from said talent-user; and

means for transmitting said request for interview to said employer.

126. (Withdrawn) The network as recited in claim 125 further comprising:

means for receiving a request-acceptance indication from said employer regarding whether said employer accepts said request for interview; and

means for providing a questionnaire to said employer regarding said request-acceptance indication.

Monster Worldwide, Inc. Exhibit 1010 (p.408/1328)

127. (Withdrawn) The network as recited in claim 126 further comprising means for notifying said employer that an account associated with said employer has been inactivated until said employer responds to said questionnaire.

128. (Withdrawn) The network as recited in claim 123, wherein said job search parameters include at least one search timing parameter, including a start time and a search frequency.

129. (Withdrawn) The network as recited in claim 128, wherein said search frequency is once per day.

130. (Withdrawn) The network as recited in claim 123 further comprising means for providing said talent-user with a list of job descriptions for which said minimum compensation requirement and said job search parameters match maximum compensation allowance.

131. (Withdrawn) The network as recited in claim 130, wherein said list of job descriptions are ordered by compensation offered and geographic proximity to a location specified in said job search parameters.

132. (Withdrawn) A method of searching for talent by searching talent information in a plurality of talent profiles, said method initiated by an employer-user associated with an employer, said method comprising:

receiving search parameters from said employer-user;

accessing a job description associated with said employer-user, said job description, including job-threshold requirements;

identifying target talent profiles associated with prospective talent and consistent with said search parameters from among said plurality of talent profiles, said target talent profiles having associated talent-threshold requirements;

comparing said talent-threshold requirements with said job-threshold requirements, whereby a threshold comparison is produced; and

determining whether at least one of said target talent profiles is compatible with

Monster Worldwide, Inc. Exhibit 1010 (p.409/1328)

said job-threshold requirements, based on said threshold comparison, whereby at least one compatible talent resumé is identified.

133. (Withdrawn) The method as set forth in claim 132 further comprising providing said employer-user with an opportunity to modify said job threshold requirements if said threshold comparison indicates that said job-threshold requirements do not match said talent-threshold requirements.

134. (Withdrawn) The method as set forth in claim 132, wherein said search parameters further include desired candidate parameters associated with a desired candidate.

135. (Withdrawn) The method as set forth in claim 134, wherein said search parameters correspond to a predetermined job description associated with said employer.

136. (Withdrawn) The method as set forth in claim 135, wherein said predetermined job description is associated with an occupational title consistent with the Dictionary of Occupational Titles.

137. (Withdrawn) The method as set forth in claim 136, wherein said employer specifies a required term of experience associated with said occupational title.

138. (Withdrawn) The method as set forth in claim 132, wherein said job-threshold requirements further include a maximum allocated compensation amount.

139. (Withdrawn) The method as set forth in claim 132, wherein said search parameters include at least one skills description consistent with the Dictionary of Occupational Titles.

140. (Withdrawn) The method as set forth in claim 139, wherein said search parameters include a required level of proficiency associated with said skills description.

141. (Withdrawn) The method as set forth in claim 132, wherein said search parameters include at least one industry identification consistent with the North American Industry Classification System, said industry identification associated with an industry.

142. (Withdrawn) The method as set forth in claim 141, wherein said employer specifies a required term of experience within said industry.

143. (Withdrawn) The method as set forth in claim 132 further comprising:

Monster Worldwide, Inc. Exhibit 1010 (p.410/1328)

determining whether said talent information associated with said compatible talent resumé includes a designation of said employer as a preferred employer, whereby a preferred employer determination results; and

based on an affirmative result of said preferred employer determination, providing contact information to said employer regarding said target talent profiles.

144. (Withdrawn) The method as set forth in claim 143, wherein based on a negative result of said preferred employer determination, said employer is afforded an opportunity to communicate a request for interview to said talent associated with said compatible talent resumé.

145. (Withdrawn) The method as set forth in claim 144 further comprising:

determining whether said talent accepts said request for interview, whereby a talent acceptance determination results;

based on a negative result of said talent acceptance determination, providing a questionnaire to said talent; and

based on one of a response and a lack of a response to said questionnaire, providing feedback to said employer-user.

146. (Withdrawn) The method as set forth in claim 132 further comprising:

receiving from said employer-user an indication regarding whether to perform a foreign search for said talent located outside of a specified geographic location; and

providing talent profile information corresponding to said talent that resides outside of a primary location country associated with said employer, wherein said talent has legal authorization to work in said primary location country.

147. (Withdrawn) The method as set forth in claim 132, wherein said search parameters further includes at least one search timing parameter, including a start time and a search frequency.

148. (Withdrawn) The method as set forth in claim 147, wherein said search frequency is once per day.

Monster Worldwide, Inc. Exhibit 1010 (p.411/1328)

149. (Withdrawn) A computer system for facilitating searching talent having associated talent descriptions in a plurality of talent profiles, said computer system configured to receive input from an employer-user associated with an employer, said employer searching in a primary location country, and said computer system comprising:

an application server operable to provide a user interface operative to receive an instruction to search from said employer-user;

a memory operative to store search parameters associated with a desired candidate;

a comparator operative to compare said search parameters and associated job-threshold requirements, wherein target talent resumés are identified based on said search parameters and said plurality of talent profiles, said target talent resumés having associated talent-threshold requirements;

wherein said talent-threshold requirements are compared to said job-threshold requirements, whereby a threshold comparison results; and

wherein it is determined whether at least one of said target talent resumés is compatible with said job-threshold requirements, based on said threshold comparison, whereby at least one compatible talent resumé is identified.

150. (Withdrawn) The computer system as set forth in claim 149 further comprising:

a message processor operative to afford said employer-user an opportunity to express a request for interview to said talent associated with said target talent resumés.

151. (Withdrawn) The computer system as set forth in claim 149, wherein said job-threshold requirements further include a maximum allocated compensation amount.

152. (Withdrawn) The computer system as set forth in claim 151, wherein said talent-threshold requirements further include a minimum required compensation amount.

153. (Withdrawn) The computer system as set forth in claim 149 further comprising:

Monster Worldwide, Inc. Exhibit 1010 (p.412/1328)

preconfigured logic configured to determine whether compatible talent information that is associated with said compatible talent résumé includes a designation of said employer as a preferred employer, whereby a preferred employer determination results; and

wherein contact information associated with said compatible talent resumé is provided to said employer-user, based on an affirmative result of said preferred employer determination.

154. (Withdrawn) The computer system as set forth in claim 153, wherein based on a negative result of said preferred employer determination, said employer-user is afforded an opportunity to express a request for interview to said talent that is associated with said compatible talent resumé.

155. (Withdrawn) The computer system as set forth in claim 154, wherein said preconfigured logic is further configured to determine whether said talent accepts said request for interview, whereby a talent acceptance determination results;

wherein based on a negative result of said talent acceptance determination, a questionnaire is provided to said talent; and

based on one of a response and a lack of said response, feedback is provided to said employer-user.

156. (Withdrawn) The computer system as set forth in claim 149, wherein said user interface further includes a check box configured to receive from said employer-user a foreign search indication regarding whether to perform a foreign search for said talent that resides outside said primary location country; and

based on an affirmative state of said foreign search indication, providing blind resumés corresponding to said talent that resides outside of said primary location country, wherein said talent has legal authorization to work in said primary location country.

Monster Worldwide, Inc. Exhibit 1010 (p.413/1328)

157. (Withdrawn) A distributed network of searching for talent by searching a plurality of talent profiles, said distributed network initiated by an employer-user associated with an employer, said employer searching in a primary location country, said distributed network comprising:

means for receiving an instruction to search from said employer-user;

means for receiving search parameters from said employer-user, said search parameters including an identification of job-threshold requirements;

means for identifying target talent resumés, based on said search parameters and said plurality of talent profiles, said target talent resumés having associated talent-threshold requirements;

means for comparing said talent-threshold requirements with said job-threshold requirements, whereby a threshold comparison results; and

means for determining whether at least one of said target talent resumés is compatible with said job-threshold requirements, based on said threshold comparison, whereby at least one compatible talent resumé is identified.

158. (Withdrawn) The distributed network as recited in claim 157, wherein said search parameters further include desired candidate parameters associated with a desired candidate.

159. (Withdrawn) The distributed network as recited in claim 158, wherein said search parameters correspond to a predetermined job description associated with said employer.

160. (Withdrawn) The distributed network as recited in claim 157, wherein said job-threshold requirements further include a maximum allocated compensation amount.

161. (Withdrawn) The distributed network as recited in claim 157 further comprising:

means for determining whether compatible talent information associated with said compatible talent resumé includes a designation of said employer as a preferred employer, whereby a preferred employer determination results; and

Monster Worldwide, Inc. Exhibit 1010 (p.414/1328)

means for providing contact information to said employer regarding said target talent resumés, based on an affirmative result of said preferred employer determination.

162. (Withdrawn) The distributed network as recited in claim 161, wherein based on a negative result of said preferred employer determination, said employer is afforded an opportunity to communicate a request for interview to said talent associated with said compatible talent resumé.

163. (Withdrawn) The distributed network as recited in claim 162 further comprising:

means for determining whether said talent accepts said request for interview, whereby a talent acceptance determination results;

means for providing a questionnaire to said talent, based on a negative result of said talent acceptance determination; and

means for providing feedback to said employer-user, based on one of a response and a lack of a response to said questionnaire.

164. (Withdrawn) The distributed network as recited in claim 157 further comprising:

means for receiving from said employer-user a foreign search indication regarding whether to perform a foreign search for said talent; and

means for providing blind résumés corresponding to said talent that resides outside of said primary location country, based on an affirmative state of said foreign search indication, wherein said talent has legal authorization to work in said primary location country.

165. (Withdrawn) A method of promoting a career site, said method comprising:

receiving talent information from a plurality of talent regarding qualifications of said talent for performing predetermined activities, said talent information including affiliation information, said affiliation information corresponding to at least one association, wherein said at least one association is in compliance with a career site affiliate policy;

Monster Worldwide, Inc. Exhibit 1010 (p.415/1328)

receiving employer information from a plurality of employers, said employer information including employer affiliation information, said employer affiliation information corresponding to at least one employer-related association, wherein said employer-related association is in compliance with said career site affiliate policy;

matching said talent information with said employer information; and

paying a commission to said at least one association based on said matching of said talent with said employer information.

166. (Withdrawn) The method as set forth in claim 165, wherein said at least one association includes at least one of professional associations, trade associations, labor unions and educational institutions.

167. (Withdrawn) The method as set forth in claim 165, wherein said employer information further includes job-threshold requirements and said talent information includes talent-threshold requirements, and wherein said matching further comprises:

based on a comparison of said talent-threshold requirements and said job-threshold requirements, matching said talent with said employer information when said employer information is compatible with said talent-threshold requirements.

168. (Withdrawn) The method as set forth in claim 165, wherein said at least one association publishes an association newsletter, and wherein said career site affiliate policy requires certain actions to be carried out by said at least one association in order for said at least one association to remain in good standing with said career site, said certain actions including:

publicly endorsing said career site;

permitting use of a name of said at least one association in connection with advertisements of said career site;

promoting said career site to members of said at least one association in connection with an association member employment program;

Monster Worldwide, Inc. Exhibit 1010 (p.416/1328)

providing said career site with advertising space in said association newsletter;

and

posting jobs associated with said at least one association to said career site.

169. (Withdrawn) The method as set forth in claim 165, wherein said commission is a fixed amount or a percentage of a fee associated with a transaction.

170. (Withdrawn) A computer system used in connection with promoting a career site, said computer system comprising:

a server operable to provide an on-line user interface operable to receive talent information from a plurality of talent regarding qualifications of said talent for performing predetermined activities, and from employers regarding job descriptions said talent information including affiliation information, said affiliation information associated with at least one association, wherein said association is in compliance with a career site affiliate policy of said career site;

an input processor configured to receive said job descriptions from a plurality of employers;

a comparator for matching said talent with said job descriptions; and

a payment processor configured to pay a commission to said association based on said matching.

171. (Withdrawn) The computer system as set forth in claim 170, wherein said job descriptions include job-threshold requirements and said talent information includes talent-threshold requirements, and wherein said comparator matches said talent with said job descriptions, based on a comparison of said talent-threshold requirements and said job-threshold requirements.

172. (Withdrawn) The computer system as set forth in claim 170, wherein said association publishes an association newsletter, and wherein said career site affiliate policy requires certain actions to

Monster Worldwide, Inc. Exhibit 1010 (p.417/1328)

be carried out by said association in order for said association to remain in good standing with said career site, said certain actions including:

publicly endorsing said career site;

permitting use of a name of said association in connection with advertisements of said career site;

promoting said career site to members of said association in connection with an association member employment program;

providing said career site with advertising space in at least one issue of a newsletter said association; and

posting jobs associated with said association to said career site.

173. (Withdrawn) A distributed network for promoting a career site, said distributed network comprising:

means for managing enterprise human resource data;

means for receiving talent information from talent regarding qualifications of talent for performing predetermined activities, said talent information including affiliation information, said affiliation information associated with at least one association, wherein said at least one association is in compliance with a career site affiliate policy;

means for receiving job descriptions from a plurality of employers;

means for matching said talent with said job descriptions; and

means for paying a commission to said at least one association based on said matching.

174. (Withdrawn) The distributed network as recited in claim 173, wherein said job descriptions further include job-threshold requirements and said talent information includes talent-threshold requirements, and wherein said matching further comprises:

Monster Worldwide, Inc. Exhibit 1010 (p.418/1328)

based on a comparison of said talent-threshold requirements and said job-threshold requirements, matching said talent with said job descriptions when said job descriptions are compatible with said talent-threshold requirements.

175. (Withdrawn) The distributed network as set forth in claim 174, wherein said at least one association publishes an association newsletter, and wherein said career site affiliate policy requires certain actions to be carried out by said at least one association in order for said at least one association to remain in good standing with said career site, said certain actions including:

publicly endorsing said career site;

permitting use of a name of said at least one association in connection with advertisements of said career site;

promoting said career site to members of said at least one association in connection with an association member employment program;

providing said career site with advertising space in said association newsletter; and

posting jobs associated with said at least one association to said career site.

176. (Withdrawn) A method for compensating at least one wholesaler for marketing a career site according to a career site wholesaler policy, said method comprising:

establishing at least one wholesaler account associated with said career site;

receiving job descriptions from employers, said employers associated with at least one association, said association assigned to said wholesaler account;

receiving talent-information from talent, said talent associated with said association;

matching said talent with said job descriptions; and

paying a commission to said wholesaler based on said matching.

Monster Worldwide, Inc. Exhibit 1010 (p.419/1328)

177. (Withdrawn) The method as set forth in claim 176, wherein said association includes at least one of a professional association, a trade association, a labor union, and an educational institution.

178. (Withdrawn) The method as set forth in claim 176, wherein said job descriptions further include job-threshold requirements and said talent-information includes talent-threshold requirements, and wherein said matching further comprises:

based on a comparison of said talent-threshold requirements and said job-threshold requirements, matching said talent with said job descriptions when said job descriptions are compatible with said talent-threshold requirements.

179. (Withdrawn) The method as set forth in claim 176, wherein said career site wholesaler policy requires certain actions to be carried out by said wholesaler in order for said wholesaler to remain in good standing with said career site, said certain actions including at least one of:

publicly endorsing said career site;

permitting use of a name of said wholesaler in connection with advertisements of said career site;

promoting said career site to said employers associated with said wholesaler;

assisting said employers in listing employer jobs associated with said employers;

posting wholesaler internal jobs associated with said wholesaler to said career site; and

linking a website associated with said wholesaler to said career site.

180. (Withdrawn) The method as set forth in claim 176, wherein said commission is a flat amount or a percentage amount.

181. (Withdrawn) A computer system for automating a process of compensating at least one wholesaler for promoting a career site, said computer system comprising:

a database containing wholesaler-information regarding at least one wholesaler account associated with said career site;

Monster Worldwide, Inc. Exhibit 1010 (p.420/1328)

an interface operative to receive job descriptions from employers, said employers associated with at least one association, said association assigned to said wholesaler account;

wherein said interface is further operative to receive talent information from talent, said talent associated with at least one organization, said organization assigned to said wholesaler account;

matching said talent with said job descriptions; and

paying a commission to said wholesaler based on said matching.

182. (Withdrawn) A distributed network for compensating at least one wholesaler for promoting a career site, said distributed network comprising:

means for maintaining enterprise human resource data;

means for establishing at least one wholesaler account associated with said career site;

means for receiving job descriptions from employers, said employers being associated with at least one association, said association assigned to said wholesaler account;

means for receiving talent information from talent, said talent being associated with at least one organization, said organization assigned to said wholesaler account;

means for matching said talent with said job descriptions; and

means for paying a commission to said wholesaler based on said matching.

183. (Withdrawn) A method for compensating at least one retailer for marketing a career site according to a career site marketing policy, said method comprising:

establishing at least one retailer account associated with said career site;

receiving employer account information associated with at least one employer account from at least one of said retailer and a secondary recruited retailer associated

Monster Worldwide, Inc. Exhibit 1010 (p.421/1328)

with said retailer, said employer account assigned to said retailer, said employer account information including job descriptions;

receiving talent-information from talent;

matching said talent with said job descriptions; and

paying a commission to said retailer based on said matching.

184. (Withdrawn) The method as set forth in claim 183, wherein said retailer is compensated for recruiting said secondary recruited retailer by way of a multi-level-marketing system and wherein said secondary recruited retailer provides employer information regarding employers not subject to a preexisting commission agreement.

185. (Withdrawn) The method as set forth in claim 184, wherein said multi-level-marketing system includes successive levels consistent with local law.

186. (Withdrawn) A computer system for facilitating compensation of at least one retailer for marketing a career site according to a career site marketing policy, said computer system comprising:

a database containing information regarding at least one retailer account associated with said career site;

an interface operable to receive employer account information associated with at least one employer account from at least one of said retailer and a secondary recruited retailer associated with said retailer, said employer account assigned to said retailer, said employer account information including job descriptions; and

a payment processor operable to pay a commission to said retailer based on matching said job descriptions with a job candidate.

187. (Withdrawn) The computer system as set forth in claim 186, wherein said retailer is further compensated for recruiting said secondary recruited retailer by way of a multi-level-marketing system.

Monster Worldwide, Inc. Exhibit 1010 (p.422/1328)

188. (Withdrawn) A distributed network for providing payments to at least one retailer for marketing a career site according to a career site marketing policy, said distributed network comprising:

an enterprise database management system;

international payment system architecture;

means for establishing at least one retailer account associated with said career site;

means for receiving employer account information associated with at least one employer account from at least one of said retailer and a secondary recruited retailer associated with said retailer, said employer account assigned to said retailer, said employer account information including job descriptions;

means for receiving talent-information from talent;

means for matching said talent with said job descriptions, said means for matching providing matching results; and

means for paying a commission to said retailer based on said matching results.

189. (Withdrawn) The distributed network as set forth in claim 188, wherein said means for paying further comprises:

means for further compensating said retailer for recruiting said secondary recruited retailer by way of a multi-level-marketing system.

190. (Withdrawn) A computer-readable medium containing instructions capable of causing a processor to perform a process for operating a career site, said career site including a talent database of talent resumés corresponding to a plurality of talent candidates and a database of job descriptions, said instructions comprising:

instructions operative to receive personal information associated with said talent resumés, said personal information including contact information;

instructions operative to receive career information regarding at least one desired

Monster Worldwide, Inc. Exhibit 1010 (p.423/1328)

career position of a candidate in said plurality of talent candidates, said career information formatted as structured data consistent with a format of said database of job descriptions;

instructions operative to receive experience information regarding said candidate, said experience information of relevance to prospective employers;

instructions operative to receive at least one command to search from a talent-user;

instructions operative to access desired job parameters associated with a desired job of said talent-user, and to access a talent profile, said talent profile including talent-threshold requirements;

instructions operative to identify target job descriptions, based on said desired job parameters and said talent profile, said target job descriptions having job-threshold requirements; and

instructions operative to compare said talent-threshold requirements to said job-threshold requirements, whereby a threshold comparison results;

instructions operative to determine whether at least one of said target job descriptions is compatible with said talent-threshold requirements, based on said threshold comparison, whereby at least one matched job-listing and candidate pair results;

instructions operative to establish at least one marketer account associated with a marketer of said career site; and

instructions operative to effect payment of a commission to said marketer based on an occurrence of said matched job-listing and candidate pair.

191. (Withdrawn) A distribution medium containing instructions capable of causing a processor to perform a process for operating computer system, said computer system including a talent

Monster Worldwide, Inc. Exhibit 1010 (p.424/1328)

database of talent resumés corresponding to a plurality of talent candidates and a database of job descriptions, said instructions comprising:

instructions operative to receive personal information associated with said talent resumés, said personal information including contact information;

instructions operative to receive position information regarding at least one position associated with an employer instructions operative to receive experience information regarding a candidate;

instructions operative to receive a command to search from an initiating party;

instructions operative to match said target job descriptions with said talent resumés, based on a threshold comparison; and

instructions operative to effect payment of a commission to a marketer based only on an occurrence of said match.

192. (Withdrawn) A method of providing employment services to at least one candidate in a plurality of talent-contributors, said method comprising:

receiving information from said candidate;

receiving job description information associated with at least one job, wherein said job description information comprises at least one benefit identification associated with a benefit provided in connection with said job; and

providing said candidate with said benefit identification.

193. (Withdrawn) The method as set forth in claim 192, wherein said benefit is chosen from incentive pay, health insurance, retirement account, dental insurance, continuing education, signing bonus, pension, on-site daycare, flex-time, free parking, relocation, paid vacation, and differential shift pay.

194. (Withdrawn) A computer system for providing employment services to at least one candidate in a plurality of talent-contributors, said computer system comprising:

Monster Worldwide, Inc. Exhibit 1010 (p.425/1328)

a first interface operable to receive information from said candidate;

a second interface operable to receive job description information associated with at least one job, wherein said job description information comprises at least one benefit identification associated with a benefit provided in connection with said job; and

an output device operable to provide at least one benefit indicator to said candidate, said benefit indicator associated with said benefit identification.

195. (Withdrawn) The computer system as set forth in claim 194, wherein said benefit indicator comprises a graphical icon.

196. (Withdrawn) A distributed network for providing employment services to at least one candidate in a plurality of talent-contributors, said distributed network comprising:

means for managing enterprise data associated with an employer;

candidate means for receiving candidate information from said candidate;

job means for receiving job description information associated with at least one job, wherein said job description information comprises at least one benefit identification associated with a benefit provided in connection with said job; and

means for providing at least one benefit indicator to said candidate, said benefit indicator associated with said benefit identification.

197. (Withdrawn) The computer system as set forth in claim 194, wherein said benefit indicator is provided in the form of an image object formatted in a page using the Hypertext Markup Language.

198. (Cancelled)

199. (Cancelled)

200. (Currently Amended) The method of claim ~~5~~, wherein said employer agrees in advance, to real time billing and/or payment of a fee to a career site operator upon said candidate's consent to the release of candidate's contact information.

Monster Worldwide, Inc. Exhibit 1010 (p.426/1328)

201. (Cancelled)

202. (Cancelled)

203. (Cancelled)

204. (Currently Amended) The method as set forth in claim 5~~,~~ wherein the amount of said obligation is computed in real time.

205. (Previously Presented) The method as set forth in claim 5 wherein ~~during said determining step,~~ before processing the search request:

determining whether the requesting one of said candidate and said employer was previously requested to provide a response to a request for release of contact information; and

if it is determined that either said employer or said candidate was previously requested to provide a response to a request for release of contact information and no response was received, then such non-responding employer or candidate is precluded from further interaction with the system until said response is provided.

206. (Cancelled)

207. (Cancelled)

208. (New) The method as set forth in Claim 5 wherein:

if the attributes of the requesting one of said candidate and said employer do not satisfy the minimum requirements of the non-requesting candidate or employer, then communicating to said requesting one of said candidate and said employer that at least one attribute of said requesting party does not satisfy the minimum requirements of the non-requesting party;

offering the opportunity to the requesting one of said candidate and said employer to change its at least one non-satisfying attribute to satisfy the minimum requirements of the non-requesting party; and

Monster Worldwide, Inc. Exhibit 1010 (p.427/1328)

if the requesting one of said candidate and said employer changes its at least one non-satisfying attribute to satisfy the minimum requirements of the non-requesting party, then receiving a response from said non-requesting candidate or employer consenting to the release of the contact information of said candidate to said employer.

209. (New) A method for operating a computer system for authorizing information exchange between at least one of a plurality of candidates and at least one of a plurality of employers prior to any direct contact between said candidate and said employer, said candidate having one or more attributes, including candidate minimum requirements, and said employer having one or more attributes, including employer minimum requirements, said method comprising:

storing the candidate attributes and requirements in a candidate database;

storing the employer attributes and requirements in an employer database;

establishing a portion of the employer database to be searchable by said candidate;

receiving a search request from said candidate to search the searchable portion of the employer database for a possible employment opportunity based upon certain search parameters;

processing the search request and providing the results to the requesting candidate;

receiving a request from said candidate to submit said candidate's contact information to at least one employer based upon the search results;

determining that the attributes of the candidate satisfy the minimum requirements of the at least one employer;

Monster Worldwide, Inc. Exhibit 1010 (p.428/1328)

receiving a response from said at least one employer that it desires to receive the contact information of said candidate;

for each specific response, obligating a payment due in real time based on said employer's consent to receive the contact information of said candidate wherein said payment due is a fee to a career site operator; and

providing the exchange of contact information in real time between said candidate and said at least one employer.

210. (New) The method as set forth in Claim 209 wherein:

if the attributes of the candidate do not satisfy the minimum requirements of the at least one employer, then communicating to said candidate that at least one of the candidate's attributes does not satisfy the minimum requirements of the at least one employer;

offering the opportunity to said candidate to change its at least one non-satisfying attribute in order to satisfy the minimum requirements of the said at least one employer; and

if said candidate changes its at least one non-satisfying attribute to satisfy the minimum requirements of the said at least one employer, then receiving a response from said at least one employer that it desires to receive the contact information of said candidate.

211. (New) The method as set forth in Claim 209 wherein before processing the search request of said candidate:

determining whether said candidate was previously requested to provide a response to a request for release of contact information; and

if it is determined that said candidate was previously requested to provide a response to a request for release of contact information by an employer and no response was received from said candidate, then precluding said candidate from further interaction with the

Monster Worldwide, Inc. Exhibit 1010 (p.429/1328)

computer system until a response to the previous request for release of contact information is received from said candidate.

212. (New) The method as set forth in Claim 211 wherein:

if no response to a previous request for release of contact information is received from said candidate within a predetermined time period, then communicating to said employer that no response for release of contact information was received from said candidate.

213. (New) The method as set forth in Claim 212 further including:

after communicating to said employer that no response for release of contact information was received from said candidate, then allowing said candidate to again interact with the computer system.

214. (New) A method for operating a computer system for authorizing information exchange between at least one of a plurality of candidates and at least one of a plurality of employers prior to any direct contact between said candidate and said employer, said candidate having one or more attributes, including candidate minimum requirements, and said employer having one or more attributes, including employer minimum requirements, said method comprising:

storing the candidate attributes and requirements in a candidate database;

storing the employer attributes and requirements in an employer database;

establishing a portion of the candidate database to be searchable by said employer;

receiving a search request from said employer to search the searchable portion of the candidate database for a possible employment opportunity based upon certain search parameters;

Monster Worldwide, Inc. Exhibit 1010 (p.430/1328)

processing the search request and providing the results to the requesting employer;

receiving a request from said employer for release of contact information of at least one candidate based upon the search results;

determining that the attributes of the employer satisfy the minimum requirements of the at least one candidate;

receiving a response from said at least one candidate that it desires to release the contact information of said candidate to said employer;

for each specific response, obligating a payment due from said employer in real time based on said at least one candidate's consent for release of contact information wherein said payment due is a fee to a career site operator; and

providing the exchange of contact information in real time between said at least one candidate and said employer.

215. (New) The method as set forth in Claim 214 wherein:

if the attributes of the employer do not satisfy the minimum requirements of the at least one candidate, then communicating to said employer that at least one of the employer's attributes does not satisfy the minimum requirements of the at least one candidate;

offering the opportunity to said employer to change its at least one non-satisfying attribute in order to satisfy the minimum requirements of said at least one candidate; and

if said employer changes its at least one non-satisfying attribute in order to satisfy the minimum requirements of said at least one candidate, then receiving a response from said at least one candidate consenting to the release of the contact information of said at least one candidate to said employer.

Monster Worldwide, Inc. Exhibit 1010 (p.431/1328)

216. (New) The method as set forth in Claim 214 wherein before processing the search request of said employer:

determining whether said employer was previously requested to provide a response to a request for release of contact information; and

if it is determined that said employer was previously requested to provide a response to a request for release of contact information by a candidate and no response was received from said employer, then precluding said employer from further interaction with the computer system until a response to the previous request for release of contact information is received from said employer.

217. (New) The method as set forth in Claim 216 wherein:

if no response to a previous request for release of contact information is received from said employer within a predetermined time period, then communicating to said candidate that no response for release of contact information was received from said employer.

218. (New) The method as set forth in Claim 217 further including:

after communicating to said candidate that no response for release of contact information was received from said employer, then allowing said employer to again interact with the computer system.

219. (New) A method executed by a computer system for authorizing the exchange of contact information between at least one of a plurality of candidates and at least one of a plurality of employers prior to any direct contact between said candidate and said employer, said method comprising:

Monster Worldwide, Inc. Exhibit 1010 (p.432/1328)

determining if either said employer or said candidate has not yet responded to a request for release of contact information;

if it is determined that either said employer or said candidate has not yet responded to a request for release for contact information, then precluding said employer or candidate from further interaction with the computer system until said response is provided;

communicating to said employer or candidate that a response to a request for release of contact information is required;

offering the opportunity to said employer or said candidate to respond to the request for release of contact information;

if said employer or candidate responds to the request for release of contact information, then determining that there is mutual consent for the release of contact information regarding such response;

obligating a payment due in real time based on the mutual consent for release of contact information wherein said payment due is a fee to a career site operator; and

providing the exchange of contact information in real time between said candidate and said employer.

220. (New) A method executed by a computer system for authorizing information exchange between at least one of a plurality of candidates and at least one of a plurality of employers prior to any direct contact between said candidate and said employer, said method comprising:

receiving a request for release of contact information from either said candidate or said employer;

Monster Worldwide, Inc. Exhibit 1010 (p.433/1328)

determining whether there is mutual consent for the release of contact information regarding the candidate for each specific request;

receiving a response from either said candidate or said employer declining the release of contact information regarding said candidate;

querying said candidate or said employer and requesting reasons why said candidate or said employer declined the request for release of contact information; and

providing a response to said candidate or said employer communicating the reasons why said candidate or said employer declined the request for release of said contact information.

221. (New) A computer system for coordinating information exchange between at least one of a plurality of candidates and at least one of a plurality of employers prior to any direct contact between said candidate and said employer, said candidate having one or more candidate attributes, including candidate minimum requirements, said employer having one or more employer attributes, including employer minimum requirements, said computer system comprising:

a processor;

memory connected to said processor;

at least one program for controlling the operation of said processor; and

an interface operable to communicate with said candidate and said employer;

said processor being operative with said memory and with said at least one program to:

store the candidate attributes and requirements in a candidate database;

store the employer attributes and requirements in an employer database;

Monster Worldwide, Inc. Exhibit 1010 (p.434/1328)

establish a searchable portion of the candidate database;

establish a searchable portion of the employer database;

receive a search request from either said candidate or said employer to search the searchable portion of one of the candidate and employer databases for a possible employment opportunity;

process the search request and provide the results thereof to the requesting one of said candidate and said employer;

receive a request for release of contact information from the requesting one of said candidate and said employer based upon the search results;

determine that the attributes of the requesting one of said candidate and said employer satisfy the minimum requirements of the non-requesting candidate or employer stored in the candidate and employer databases;

determine that there is mutual consent for the release of contact information regarding the candidate;

obligate a payment due from said employer in real time based on the mutual consent for release of contact information wherein said payment fee is due to a career site operator; and

provide the exchange of contact information in real time prior to any direct contact between said candidate and said employer.

222. (New) The computer system as set forth in Claim 221 wherein if the attributes of the requesting one of said candidate and said employer do not satisfy the minimum requirements of the non-requesting candidate or employer, said processor being further operable to:

communicate to said requesting one of said candidate and said employer

Monster Worldwide, Inc. Exhibit 1010 (p.435/1328)

that at least one attribute of said requesting party does not satisfy the minimum requirements of the non-requesting party;

offer the opportunity to the requesting one of said candidate and said employer to change its at least one non-satisfying attribute in order to satisfy the minimum requirements of said non-requesting party; and

if the requesting one of said candidate and said employer changes its at least one non-satisfying attribute in order to satisfy the minimum requirements of said non-requesting party, then determine that there is mutual consent for the release of contact information regarding the candidate for each specific response.

223. (New) The computer system as set forth in Claim 221 wherein said system further includes a payment interface operable to receive payment in real time from said employer, said processor being further operable to receive payment in real time from said employer through said payment interface based upon the occurrence of said mutual consent.

224. (New) The distributed network as set forth in Claim 14 further including:

means for, if the attributes of the requesting one of said candidate and said employer do not satisfy the minimum requirements of the non-requesting candidate or employer, then communicating to the requesting one of said candidate and said employer that at least one attribute of said requesting party does not satisfy the minimum requirements of the non-requesting party;

means for offering the opportunity to the requesting one of said candidate and said employer to change its at least one non-satisfying attribute in order to satisfy the minimum requirements of said candidate and said employer; and

Monster Worldwide, Inc. Exhibit 1010 (p.436/1328)

means for, if the requesting one of said candidate and said employer changes its at least one non-satisfying attribute in order to satisfy the minimum requirements of said non-requesting party, determining that there is mutual consent for the release of contact information regarding said candidate to said employer.

225. (New) The method as set forth in claim 5 wherein before processing the search request:

determining whether the non-requesting one of said candidate and said employer was previously requested to provide a response to a request for release of contact information; and

if it is determined that either said non-requesting employer or candidate was previously requested to provide a response to a request for release of contact information and no response was received, then such non-responding non-requesting employer or candidate is precluded from further interaction with the system until said response is provided.

Monster Worldwide, Inc. Exhibit 1010 (p.437/1328)

REMARKS

The above amendments and these remarks are now submitted in response to the Office Action mailed November 10, 2005 in the above-identified application. Claims 5, 14, 17, 200, 204 and 205 have been amended; Claims 7, 8, 11, 12, 15, 198, 199, 202, 203, 206 and 207 have been cancelled; and new Claims 208-225 have been added.

Claims 5, 14, 209, 214, 219, 220 and 221 are independent claims remaining in the case.

35 U.S.C. §112 REJECTIONS

Claims 8 and 17 stand rejected under 35 U.S.C. §112 as being indefinite with respect to recitation of the language "the non-requesting" as used in these claims. Claim 8 has been cancelled. Claim 17 is not indefinite based upon the language of independent claim 14 which will be hereinafter further discussed. Claim 14 specifically sets forth means for receiving a search request from either the candidate or the employer and specifically refers to receiving a request for the release of contact information from the requesting one of said candidate and said employer. Independent Claim 14 is therefore very clear as to one of either the candidate or the employer requesting the release of contact information. As a result, since only one of the two parties is requesting the release of contact information, the remaining party is the non-requesting one of either the candidate and/or the employer. In fact, Claim 14 specifically addresses means for determining that the attributes of the requesting one of said candidate and said employer satisfy the minimum requirements of a non-requesting candidate or employer. As a result, independent claim 14 clearly establishes both a requesting and a non-requesting party and dependent Claim 17 has proper antecedent basis with respect to its base claim 14.

Monster Worldwide, Inc. Exhibit 1010 (p.438/1328)

35 U.S.C. §103 REJECTIONS

Claims 5-8, 10-12, 14, 15, 17, 198-200 and 202-207 stand rejected under 35 U.S.C. §103(a) as being unpatentable over Walker et al U.S. Patent No. 5,884,270 (the Walker reference) in view of Pineda et al International Publication No. WO01/82158 A2 (the Pineda reference). Both the Walker and Pineda references are newly cited and relied upon in the prosecution of this application.

THE CITED WALKER REFERENCE

The Walker reference discloses a system for controlling the release of confidential or sensitive information of at least one of the parties involved in an anonymous communication. This control and anonymity is accomplished in several ways, for example, by encrypting communications between the parties; by establishing a communications channel between the party and requestor while not revealing the identity of the party and/or requestor to each other; and, importantly, by establishing first party and second party rules which must be met before releasing the identity of either party. See, Column 4, Lines 35-37, 63-66; and Column 5, Lines 5-30. The Walker system receives from a first party first data including the identity of the first party and it also receives at least two first party rules for releasing the first data including a rule for releasing the identity of the first party. Similar information is gathered from the second party including receiving from the second party at least two second party rules for releasing the second party data including a rule for releasing the identity of the second party. The Walker system is then operative to transmit the identity of the first party to the second party based upon satisfying the first party rule for releasing the identity of the first party and upon satisfying the second party rule for releasing the identity of the second party. This release of contact information is

Monster Worldwide, Inc. Exhibit 1010 (p.439/1328)

controlled by the central controller 200 and does not require receiving a response from either the first party or the second party during the process. If the first and second party rules are met, the central controller will automatically release the search results and if the first and second party rules for releasing the identity of those parties are likewise met, the central controller 200 will automatically release the identity of the first and second parties. This method and procedure is clearly set forth in Claim 1 of the Walker reference.

The mutual agreement between the parties as to the release of contact information in the Walker method is therefore based solely upon pre-determined rules which are entered into the central controller by each of the respective parties. The mutual consent is based upon the pre-determined first and second party rules for releasing such information. In fact, all of the independent claims of the Walker reference require the establishment of first and second party rules for releasing the identity of each respective party. The Examiner's cite to Walker, Column 7, Lines 24-41 supports this pre-authorized release of contact information through the use of first and second party rules. This is totally different from Applicant's invention wherein a response is required from the non-requesting party for each request for the release of contact information as will be hereinafter further explained.

The Walker method and system also allows the first and second parties to communicate directly with each other in an anonymous fashion. This is verified by the Examiner's cite to Walker, Column 21, Line 58 through Column 22, Line 9. This is totally different from Applicant's invention wherein no direct contact between the candidate and the employer, or between the first and second party, occurs until after there has been an exchange of contact information in real time.

Monster Worldwide, Inc. Exhibit 1010 (p.440/1328)

THE CITED PINEDA REFERENCE

The Pineda reference discloses a method for matching which allows a candidate to enter profile data, including identification data, and to match their criteria and then view available job postings. The system further allows an employer to search profile data corresponding to a plurality of candidates and return search results corresponding to candidates who match the search criteria. After search results have been displayed, the employer can review certain portions of each candidate's profile data and the employer can then authorize a payment for each candidate for whom the employer would like to receive the identification data so that they can make contact with the candidate through their normal hiring process. This system again does not require mutual consent between the candidate and employer for each specific request and the release of contact information is automatic once the employer authorizes payment. It is payment of the fee by the employer which unlocks the identification and contact data. In fact, all of the independent claims of the Pineda reference require providing the employer with the requested identification data based upon receiving a request from the employer for such identification data and charging a fee to the employer for such data. As set forth and explained in more detail below, the Pineda employment system and method, among other things, does not obtain mutual consent from both the candidate and the employer for the release of contact information; it does not check the attributes of the requesting party against the minimum requirements of the non-requesting party; it does not give the requesting party an opportunity to satisfy the minimum requirements of the non-requesting party; it does not preclude an authorized user from further interaction with the system until a response to a previous request for release of contact information is obtained; and it does not provide the feedback communication as clearly set forth in the various claims pending in the present application.

Monster Worldwide, Inc. Exhibit 1010 (p.441/1328)

REVIEW OF PENDING CLAIMS IN THE APPLICATION

In light of all of the prior art cited during the prosecution of the present application including the Walker reference, Claim 5 has been further amended to more clearly define Applicant's invention. As clearly set forth in Claim 5, the present method requires obtaining attributes and minimum requirements for both the plurality of candidates and the plurality of employers, and that these attributes and minimum requirements be stored in a candidate database and an employer database in a searchable format. Attributes and requirements as applied to talent and employer profiles are clearly defined in the specification at pages 10, 19, 24, 25, 28, 41, 54, 56, 62, 63 and elsewhere and, although some attributes may be requirements and some requirements may be attributes, these two terms are not synonymous and may include different criteria. Background information associated with talent-capability attributes is received in a structured format. See, Figs. 2 and 3. Job description information is received from employers in a structured format. See, Figs. 8 and 9.

Once the attributes and minimum requirements of both the candidate and the employer are entered into the appropriate databases, Claim 5 requires receiving a search request from either a candidate or an employer to search the searchable profile of one of the candidate and employer databases for a possible employment opportunity based upon certain search parameters. Once the search request has been processed, the results of the search are provided to the requesting one of either the candidate or the employer. For example, a candidate may request a search for all aerospace engineering jobs in the St. Louis area. The results of this search would be provided to the candidate wherein the job opportunities would be described but the employer's identity and/or contact information associated with each such aerospace engineering

Monster Worldwide, Inc. Exhibit 1010 (p.442/1328)