03-19-01

A

jc839 U.S. PTO
03/15/01

PTO/SB/05 (11-00)
Approved for use through 10/31/2002. OMB 0651-0032
U.S. Patent and Trademark Office; U.S. DEPARTMENT OF COMMERCE

Please type a plus sign (+) inside this box → ⊞

Under the Paperwork Reduction Act of 1995, no persons are required to respond to a collection of information unless it displays a valid OMB control number

UTILITY PATENT APPLICATION TRANSMITTAL

(Only for new nonprovisional applications under 37 CFR 1.53(b))

Attorney Docket No.	85160.924
First Inventor	David CHAO
Title	Method and System for Managing Distributor Information
Express Mail Label No.	EL705171068US

jc872 U.S. PTO
09/810514
03/15/01

APPLICATION ELEMENTS

See MPEP chapter 600 concerning utility patent application contents.

1. ☐ Fee Transmittal Form (e.g., PTO/SB/17) *(Submit an original and a duplicate for fee processing)*
2. ☐ Applicant claims small entity status. See 37 CFR 1.27.
3. ☑ Specification [*Total Pages* 54] *(preferred arrangement set forth below)*
   - Descriptive title of the invention
   - Cross Reference to Related Applications
   - Statement Regarding Fed sponsored R & D
   - Reference to sequence listing, a table, or a computer program listing appendix
   - Background of the Invention
   - Brief Summary of the Invention
   - Brief Description of the Drawings *(if filed)*
   - Detailed Description
   - Claim(s)
   - Abstract of the Disclosure
4. ☑ Drawing(s) *(35 U.S.C. 113)* [*Total Sheets* 4]
5. Oath or Declaration [*Total Pages*]
   - a. ☐ Newly executed (original or copy)
   - b. ☐ Copy from a prior application (37 CFR 1.63 (d)) *(for continuation/divisional with Box 18 completed)*
     - i. ☐ DELETION OF INVENTOR(S) Signed statement attached deleting inventor(s) named in the prior application, see 37 CFR 1.63(d)(2) and 1.33(b).
6. ☐ Application Data Sheet. See 37 CFR 1.76

ADDRESS TO: Assistant Commissioner for Patents
Box Patent Application
Washington, DC 20231

7. ☐ CD-ROM or CD-R in duplicate, large table or Computer Program *(Appendix)*
8. Nucleotide and/or Amino Acid Sequence Submission *(if applicable, all necessary)*
   - a. ☐ Computer Readable Form (CRF)
   - b. Specification Sequence Listing on:
     - i. ☐ CD-ROM or CD-R (2 copies); or
     - ii. ☐ paper
   - c. ☐ Statements verifying identity of above copies

ACCOMPANYING APPLICATION PARTS

9. ☐ Assignment Papers (cover sheet & document(s))
10. ☐ 37 CFR 3.73(b) Statement *(when there is an assignee)* ☐ Power of Attorney
11. ☐ English Translation Document *(if applicable)*
12. ☐ Information Disclosure Statement (IDS)/PTO-1449 ☐ Copies of IDS Citations
13. ☐ Preliminary Amendment
14. ☑ Return Receipt Postcard (MPEP 503) *(Should be specifically itemized)*
15. ☐ Certified Copy of Priority Document(s) *(if foreign priority is claimed)*
16. ☐ Request and Certification under 35 U.S.C. 122 (b)(2)(B)(i). Applicant must attach form PTO/SB/35 or its equivalent.
17. ☐ Other: .....

18. If a CONTINUING APPLICATION, *check appropriate box, and supply the requisite information below and in a preliminary amendment, or in an Application Data Sheet under 37 CFR 1.76:*

☐ Continuation ☐ Divisional ☐ Continuation-in-part (CIP) of prior application No.: ____/____

Prior application information: Examiner _____ *Group Art Unit:* _____

For CONTINUATION OR DIVISIONAL APPS only: The entire disclosure of the prior application, from which an oath or declaration is supplied under Box 5b, is considered a part of the disclosure of the accompanying continuation or divisional application and is hereby incorporated by reference. The incorporation can only be relied upon when a portion has been inadvertently omitted from the submitted application parts.

19. CORRESPONDENCE ADDRESS

☐ *Customer Number or Bar Code Label* (Insert Customer No. or Attach bar code label here) or ☐ *Correspondence address below*

Name	The Hecker Law Group				
Address	1925 Century Park East Suite #2300				
City	Los Angeles	*State*	California	*Zip Code*	90067
Country	USA	*Telephone*	(310)286-0377	*Fax*	(310)286-0488

Name (Print/Type)	Gary A. Hecker	*Registration No. (Attorney/Agent)*	31,023
Signature		*Date*	03-15-01

Burden Hour Statement: This form is estimated to take 0.2 hours to complete. Time will vary depending upon the needs of the individual case. Any comments on the amount of time you are required to complete this form should be sent to the Chief Information Officer, U.S. Patent and Trademark Office, Washington, DC 20231. DO NOT SEND FEES OR COMPLETED FORMS TO THIS ADDRESS. SEND TO: Assistant Commissioner for Patents, Box Patent Application, Washington, DC 20231.

Callidus Ex. 1002
CBM2013-00054
(Callidus v. Versata)

UNITED STATES PATENT APPLICATION

FOR

METHOD AND SYSTEM FOR MANAGING DISTRIBUTOR INFORMATION

Attorney Docket No. 85160.924

INVENTORS:

DAVID CHAO
BRIAN BLOUNT
CHARLES ERICKSON
SHARI GHARAVY
CHENG ZHOU
JOSHUA TOUB

PREPARED BY:

THE HECKER LAW GROUP
1925 Century Park East
Suite 2300
Los Angeles, CA 90067

(310) 286-0377

FIELD OF THE INVENTION

This invention relates to the field of computer technology. More specifically, the invention relates to a method and system for managing distributor information.

Portions of the disclosure of this patent document contain material that is subject to copyright protection. The copyright owner has no objection to the facsimile reproduction by anyone of the patent document or the patent disclosure as it appears in the Patent and Trademark Office file or records, but otherwise reserves all copyrights whatsoever.

BACKGROUND

Managing sales and distribution channels has become a difficult task in today's business environment where it is necessary to quickly and fairly administer incentives for salespeople and distribution channel partners while coping with regulatory issues. To keep revenues growing and keep up with customer demands, financial services providers have to move quickly even when regulation, competition and new sales distribution channels inhibit growth. Management is expected to provide new opportunities for improved revenues and margins, while providing customers with better, faster information and services.

The distribution channel model within the financial services industry is very complex. Products are sold across multiple distribution channels and the workforce is very fluid, with individual distributors working for multiple companies and engaging in multiple agreements with service providers. There are regulatory constraints on the sales force in that all distributors who sell products must be licensed and appointed, or authorized, to sell those products. Financial services companies must track all of this information about their sales force, maintain a history of all of this information, provide incentive based compensation to their sales force, and calculate their compensation based upon numerous variables. Consequently, any plan for distribution channel management must consider the number of channels, the number of distributors, compensation complexity, regulatory and licensing requirements and the number and types of products that will be sold.

Financial service companies are being driven by increased competition to consider the use of independent agents in place of captive sales staff. Firms may wish to enhance and reward cross distribution channel interactions. They must be able to enhance distributor reporting and communication and effectively manage independent brokers and captive sales staff. They must reduce the time required to market new products and implement new compensation plans and differentiate themselves based on services offered to customers. In addition, they

Ex. 1002 004/597

must be able to rapidly integrate new distribution channel acquisitions and grow distribution capabilities, while reducing administration costs.

Cost avoidance is essential as mergers and acquisitions have led to many disparate systems, some of which are antiquated. Firms must reduce implementation time for new products and compensation plans on these antiquated systems and reduce the potential for overpayment. The goal must be a reduction in the overall cost of administration. Accordingly, these companies must interact with the producers (of sales) using preferred methods and quickly model new and creative compensation plans, while consolidating compensation administration systems.

In order to provide sales representatives with an incentive to sell as much as possible, or to sell more of a desired product or products at certain prices, sales organizations create incentive plans where commissions are provided or offered to the sales representatives when specific sales goals or targets are achieved during particular period of time. In addition, an incentive plan may apportion credit to everyone on a sales representative's sales team, to the representative's manager, or someone other than the sales representative himself. Sales representatives typically receive compensation based on a salary, the hours worked, and/or on the goods or services sold. When basing compensation on transactions, specifically on the goods or services sold, sales representatives

receive a commission that can be based on profits, net sales, the number of products sold, or some other variable. Other primary compensation includes gross dealer concessions. Secondary compensation includes expense allowances, persistency bonuses and overrides that can be allocated among sales teams and accumulated over time if desired.

Sales compensation for direct and indirect channels can be one of the most effective levers for aligning sales performance with business goals. Unfortunately, designing and administering effective incentive programs is a difficult management challenge. The management of a business can spend a great deal of time and money in developing incentive plans. In the prior art, the creation and distribution of incentive plans is a slow process that is prone to error. It can take months to implement a new compensation plan, and dependencies on computer software can frustrate sales managers who want to make even simple changes. Moreover, a lack of measurement tools can make it impossible to develop a "closed loop", continuous improvement process. Businesses must be able to design, process, and communicate sophisticated incentive programs that drive revenue growth across all sales channels. Businesses need to streamline the administration of quotas, territories, and commissions, and also require tools to measure and improve the effectiveness of incentive programs. This would greatly simplify the management challenge of aligning tactical business performance with strategic objectives, making it

possible to react more quickly and effectively to changes in market and competitive conditions.

Quotas are a necessary component of most sales compensation plans, yet they are notoriously difficult to administer, especially when they involve multiple hierarchies. Not only is it easy to introduce problems like double counting and under- or over-payment, but also changes typically require long turnaround times while they are implemented by changes in computer software. The management of sales quotas is difficult and there is a need to be able to manage them easily and accurately, allowing business users to assign quotas by territory or position and across multiple hierarchies. Managers also require a capability to accurately track sales results and forecast future performance. Needed elements include the ability to tie quotas between positions and sales teams or positions and territories, make sales projections, a provision for quick and easy quota setting and editing, and a simple interface for use from the field.

Managing sales territories involves analyzing past results, assigning territories, and forecasting future sales performance. For most organizations, it is a difficult and time-consuming process with the result that it is commonly only undertaken once a year. Unfortunately, market conditions change continuously, making it practically impossible to keep sales territories aligned with business needs for more than a short period of time. A more automated process for

territory management is needed to allow large sales organizations to keep up with the market.

Another need of firms in financial services is an ability to manage sales producer payment accounts by defining multiple accounts per representative, setting up payment rules for each account and procedures for adjustments. Loan issuance against customer accounts must also be managed. Loan and repayment schedules, and appropriate records, must be maintained. As a part of this activity, it is necessary to track eligible compensation against parameters established for the loan and to be able to track collection of the loan and initiate charge-back and from the producer if appropriate.

In the area of distributor administration, firms also would like to manage a shared repository for all producer information, including personal information, professional information and preferences. There is a need to provide a view of the roles played by individuals with an organization, and active selling agreements and reporting relationships. Firms would like a centralized distributor repository in order to be able to view, report and compensate producer relationships individually and holistically. In addition, they must reduce errors or miscalculations leading to overpayment. At the same time, these firms must assist new agent distribution channels in learning how to sell

new types of products and create new distribution capabilities for existing products.

Credential management is a critical issue for many firms. They must track professional accreditation including licenses, appointments, National Association of Securities Dealers (NASD) registration and continuing education requirements for the maintenance of these professional accreditations to ensure that they are represented by appropriately credentialed representatives. This need is made more acute by constantly changing government rules and regulations, as well as by different regulations imposed by the different jurisdictions in which a firm operates. Firms must determine when renewal processing is required and manage new and renewal application processes to ensure regulatory compliance in every jurisdiction. A further problem is presented by representatives who may move from jurisdiction to jurisdiction in the course of their representation of a firm. Further, there is substantial turnover in representation resulting in a continuing need to ascertain the credentials of new representatives as well as to maintain contact with former representatives in the event that issues arise from their former representation.

In order to appropriately manage their representatives, firms must also be able to create customized contracts and selling agreements by combining reusable compensation components and personalizing agreement templates to fit

individual producers. A selling contract defines a hierarchy of sales people that can sell products under that contract and it defines what products can be sold under that agreement. The selling contract also specifies commission schedules and identifies which sales people participate under a particular commission schedule. As multiple versions of such agreements may come into use over time, a procedure is needed to allow multiple users to maintain agreements through versioning, or version control, and a method must be provided to manage the approval process for agreement components and templates.

Any distribution management channel solution, in order to be useful, must have a capability for error correction, including manually inputting and adjusting all transaction information, making retroactive adjustments and viewing and managing ledger items. Other features that are desirable include the ability to cancel and rerun transactions.

Many financial services firms would like to be able to communicate distribution channel management information over the Internet so that producers can view the state of their relationship with a firm, including profile information, licenses, appointments, product information, contract and compensation information. Firms would also like to be able to perform modeling and "what if" analysis and have the ability to capture historical data to make strategic decisions about the effectiveness of future plans. A set of Web-

based incentive management products that can be deployed to practically any sales or distribution channel would be useful. Such tools could greatly simplify the burden of designing, forecasting, launching, measuring, and refining incentives programs.

Computer software is necessary to implement the solution to these problems and fulfill the perceived needs just described. Such software commonly utilizes multiple related functions and data structures. To encapsulate these related functions and data structures, the software often utilizes a standard object oriented programming (OOP) language approach.

In conclusion, there is a need for a solution, implemented on a computer in an object oriented programming environment, that manages the contracts between the manufacturers of a product, which may include financial services, and the distributors of their product in an industry where there is multiple channel selling, a fluid workforce, and regulatory constraints. This solution should track information, such as contact points, payment methods, and the organizational hierarchies, on all parties in the system. It must manage regulatory information and ensure that distributors are licensed and appointed to sell the products manufactured, or distributed, by the provider. In addition, the solution must allow for compensation configuration and provide financial services companies with a toolkit for creating and modeling their complex

commission schedules used to compensate their sales forces. This should include a provision for charge-back of commissions if appropriate. Also, the solution must model contracts between the financial services company, or provider, and the distributors who sell the products. The solution must calculate compensation for all distributors and should allow for access through the Internet.

Attorney Docket No. 85160.924

SUMMARY OF THE INVENTION

The invention provides a method and system for managing contracts between manufactures of a product and the distributors of their product in an industry comprising multiple channel selling, a fluid workforce, and regulatory constraints. An embodiment of the invention provides a system that enables financial services companies to track information about their sales force, maintain a history of all of the information, provide incentive based compensation to their sales force, and calculate their compensation based upon numerous variables. The system referred to hereinafter as Distributor Management System Suite (DMSS) comprises a suite of applications that provide tracking information, such as contact points, payment methods, and organizational hierarchies on all parties in the system, managing regulatory information and ensuring that distributors are licensed and appointed to sell the products manufactured by the provider. The DMSS provides financial services institutions with the means to maintain distributor records, contracts, and commissions. The DMSS includes components for managing information related to distributors, validating and tracking licenses, creating customized contracts, and maintaining compensation structures. The information stored in the DMSS database includes contract components and rules, distributor financial information, bonus schedules, and license and appointment data.

In an embodiment of the invention, the DMSS allows for configuring compensations, providing financial services companies a toolkit for creating and modeling their complex commission schedules used to compensate their sales force. The DMSS provides modeling capabilities for agreements and contracts between a financial services company or provider and the distributors who sell products. In an embodiment of the invention, the DMSS calculates compensations for all distributors, processes payment and manages dept.

In an embodiment of the invention, the DMSS comprises several components comprising management modules, a backbone, one or more data processing engines, databases, and storage management components. The backbone allows for data exchange between components of the DMSS comprising module-to-engine and engine-to-database data exchange.

In an embodiment of the invention, the DMSS comprises data processing engines. These system components are designed to draw information from the DMSS databases, process the information, and store the result in a database for further use by the DMSS modules and engines.

In an embodiment of the invention, the DMSS is composed of several modules comprising a distributor administration module, a license and appointment module, a selling agreements module, a debt management module, and a payment module. These modules interact with the backbone and engines

to maintain relationships between financial services institutions and their distributors.

Docket # 85160.924

DESCRIPTION OF THE DRAWINGS

Figure 1 shows a block diagram representing an embodiment of a system that utilizes the Distributor Management System Suite (DMSS).

Figure 2 comprises a flowchart showing the process of communicating between modules, the data processing engine, the DMSS backbone and the databases in an embodiment of the invention.

Figure 3 show a block diagram representing an example of interactions occurring within DMSS modules and engines in an embodiment of the invention.

Figure 4 shows a hardware environment for executing one or more aspects of the invention.

DETAILED DESCRIPTION

The invention provides a method and system for managing distributor information. In the following description, numerous specific details are set forth in order to provide a more thorough understanding of the invention. It will be apparent, however, to one skilled in the art, that the invention may be practiced without these specific details. In other instances, well-known features have not been described in detail in order to avoid unnecessarily obscuring the invention.

System Overview:

An embodiment of the invention comprises an extensible method for managing relationships between institutions (e.g., suppliers/ manufacturers) of a product or service and the distributors of their product. Aspects of the invention are targeted at industries where there is multiple channel selling, a fluid workforce, and regulatory constraints upon products sales. For example, systems embodying the invention provide a way to manage the agreements that financial services companies have with the distributors who sell their products. Thus, organizations such as life insurances companies may utilize embodiments of the invention to manage the sale and distribution of life insurance plans in a way that coincides with the regulatory constraints of government organizations.

Ex. 1002 017/597

Such companies can utilize embodiments of the invention to track information about the company's sales force, maintain a transaction history of the information associated with multiple products, provide incentive based compensation to the company's sales force, and calculate sales force compensation based upon numerous variables. For example, the system referred to hereinafter as Distributor Management System Suite (DMSS) comprises a suite of applications that provide tracking information, such as contact points, payment methods, and organizational hierarchies on all parties in the system, managing regulatory information and ensuring that distributors are licensed and appointed to sell the products manufactured by the provider.

In one embodiment of the invention, DMSS comprises a suite of multiple engines and modules each configured to provide functionality that helps manage the flow of information between distributors and suppliers. Generally, DMSS provides users with a mechanism for managing information related to distributors, validating and tracking licenses, creating customized contracts, and maintaining compensation structures. To perform such functions the system configured in accordance with one embodiment of the invention stores information such as contract components and rules, distributor financial information, bonus schedules, and license and appointment data. The engines and modules of DMSS may, for example, be configured to perform at least the following functions:

1) Provide financial services institutions with the means to maintain organization hierarchies associated with parties on the system (e.g., distributor records), track information such as contracts, and payment methods (e.g. how a distributor is paid).

2) Manage regulatory information and ensures that distributors are licensed and appointed to sell the products manufactured by the provider.

3) Perform compensation configuration. It provides financial services companies a toolkit for creating and modeling their complex commission schedules used to compensate their sales force. For example, the system may calculate compensation for all distributors by building on top of a commission engine and using the engine, the commission models, and the agreement models to calculate the compensation for all of its sales force.

4) Models agreements or contracts between the financial services company or provider and the distributors who sell the products. These agreements are termed 'Selling Agreements'. A selling agreement defines a hierarchy of sales people that can sell products under that contract, it

defines what products can be sold in that agreement, it defines what commission schedules can be used in that agreement, and it defines which sales people participate in which commission schedule. The DMSS may utilize the terms defined in selling agreements to calculate compensations for all distributors.

5) Managing information related to distributors, validating and tracking licenses, creating customized contracts, and maintaining compensation structures. The information stored in the DMSS database comprises information such as contract components and rules, distributor financial information, bonus schedules, and license and appointment data.

6) Manages payment and debt to distributors / sales representatives (e.g., net-pay and debt management).

In accordance with one embodiment of the invention DMSS is built on top of a commission engine configured to model and calculate commission for the sales force. A commission engine takes two inputs, a commission model and a set of transactions, and generates ledger items (that correspond to payments) as output. Each transaction represents a physical sales transaction, such as distributor selling a life insurance policy. The commission model represents two

critical pieces of data: the sales team hierarchy and the commission schedules. The sales team hierarchy comprises a hierarchy of all sales people that will be responsible for a transaction. The commission schedules define formula for translating transactions into ledger items. Commission schedules may be modeled through quota, bonus, and plan objects. The commission model utilized in one or more embodiments of the invention is described in further detail in pending patent application serial number 09/081857, entitled "Method and Apparatus For Determining Commission", which in incorporated herein by reference.

DMSS complements the commission engine in that it provides a mechanism for modeling selling agreements with commission models. In accordance with one embodiment of the invention, at least one commission model exists for each selling agreement in DMSS. Agreement hierarchies are modeled within the sales team hierarchy. The agreement commission schedules are stored in accordance with one embodiment of the invention in the commission model's quota, bonus, and plan objects.

The commission schedules used in an agreement are often the same or similar across agreements. Therefore, the agreements are put together from contract kits. A contract kit contains a set of commission schedules (also referred to as compensation components) that can be used within an agreement. Each compensation component and contract kit is versioned, and the compensation

Ex. 1002 021/597

component contains the commission schedule information needed to generate a complete commission schedule in the commission model. Each agreement is then created from one contract kit, and when the agreement is created a user can selected which components from the kit to include in the agreement. When a new version of a component or kit is created, a user can select to cascade the new version to all the agreements that use it, or to leave the agreement using the old version.

DMS provides additional functionality by allowing dependencies between models through linked hierarchies and pooling agreements. It is often common for one party to receive credit or rollup from somebody's work in a different agreement. This is accomplished through linked hierarchies. A distributor (Ted) in one agreement (AG1) make be linked to another distributor (Fred) in another agreement (AG2). This allows transactions for Fred and all of his descendants to also be credited to Ted.

It is also common for multiple parties to want to share work across agreements. For example, one may wish to use one quota to calculate qualification on a quota level, and another quota to calculate payout. In this example, one would want several parties performance to contribute to the qualification quota, even parties in different agreements. Pooling agreements provide this functionality, by pooling work from different agreement participants from potentially different agreements into one quota. An extensible

object model in accordance with one embodiment of the invention provides a framework for representing such agreements.

System Components:

Figure 1 shows a block diagram representing an embodiment of a system that utilizes the Distributor Management System Suite (DMSS) 105. As shown in Figure 1, the DMSS comprises management modules 110, a backbone 120 allowing data exchange between applications and databases, and between applications, a commission engine 125, a number of additional data processing engines 140, and data storage and storage management components 130. The DMSS is also configured to allow for the addition of more applications and plugins 110 to provide additional services.

In an embodiment of the invention, the DMS comprises several modules and applications. In this example, the system is used by financial organizations to manage sales agreements, distributor credentials, and sales compensation. However, the reader should note that the system embodying the invention is also applicable outside of the financial services industry and that the term financial organization is utilized for illustrative purpose only. The invention is not limited solely to the financial services industry, but may be applied to other industries. For example, the system may be utilized in any business environment having a need to determine if individuals associated with a sale are appropriately licensed, compensated. The invention may also be applied to

Ex. 1002 023/597

other business situations were companies must operate pursuant to the terms of an agreement.

DMSS comprises a DMS Database which may exchange data with modules and engines via backbone 120. In accordance with one embodiment of the invention, backbone 120 comprises an information infrastructure used to integrate applications 110, engines 140 and 125, and databases 130. Backbone 120 facilitates communication between data resources and modules, and integration of different computing equipment, including local networks, web interfaces, and back-office systems. Thus, backbone 120 provides a mechanism for maintaining data storage and retrieval, in addition to communicating changes and updates to the other modules. Backbone 120 is configured to retrieve data from the database in response to the needs of DMSS modules and engines and transmit that data to its requestor. Backbone 120 provides an extensible framework suitable for building and integrating applications customized for the needs of individual clients. Backbone 120 receives information from the DMSS modules and acts on it, storing the resulting object or sending it back to the module. As modules perform their tasks and functions, the backbone communicates changes and updates to the rest of the applications. Backbone 120 also provides communication between the modules by sharing data and functions. The DMSS and other applications 110, engines 140, and databases 130 may execute bi-directional requests and responses across backbone 120. Backbone 120 is configured to retrieve data from the database in response to the needs of DMSS

Ex. 1002 024/597

modules and engines and transmit that data to its requestor. Backbone 120 eliminates some of the need for developing custom code, and allows developers to integrate new applications without knowing all the other applications in the system.

Engines 140 and 125 may be launched by the DMSS modules via the backbone and draw information from the DMSS databases. The engines process the information, and store the resulting object in a database or the backbone for further use by the DMSS modules and engines. A commission engine 125, configured in accordance with one embodiment of the invention, utilizes backbone 120 to gather information about agreements from the database. Commission engine 125 may, for example, identify relevant data in the database and produce a set of objects. Once the engine has processed all the objects, commission engine 125 can generate payments based on the agreements.

Workflow process engine 146, operating in accordance with one embodiment of the invention, starts and responds to workflow events received from the DMSS modules through backbone 120. Workflow process engine 146 completes the desired workflow event and sends that information back through backbone 120. In an embodiment of the invention workflow engine 146 enables users to create and run one or more business processes. The processes may be created in a formatted data input (e.g. XML or Java) and become objects (business rules) in the backbone. The workflow engine 146 enables the flow of

Ex. 1002 025/597

information in the DMSS and provides users with a customizable mechanism for creating business processes.

The DMSS may comprise a commerce configuration engine 144 that allows users to define and enforce the set of rules governing how contract kit components (e.g., document components and compensation components) are combined into agreements for each distributor. The internal processes utilized by configuration engine 144 are described in further detail in United States Patent Number 5,825,651, entitled "Method and Apparatus For Maintaining and Configuring System", which in incorporated herein by reference. The commerce configuration engine 144 utilizes the contract kit for creating agreements between a distributor and a financial services company.

A reporting engine 142 may be added to the DMSS and configured to generate reports and store such reports in the database. Each component of an agreement has a corresponding document, generated from report templates, which describes that component. The DMSS may also have additional modules comprising a distributor administration module 115, a license and appointment module 116, a selling agreements module 117, a debt management module 118, and a payment module to which is may be referred to also as Net Pay module 119. These modules interact with backbone 120 and engines to maintain relationships between financial services institutions and their distributors.

Ex. 1002 026/597

In one embodiment of the invention, distributor administration module 115 enables a financial services institution to record and track a broad set of information associated with the institution's distributors. The distributor information may be stored in a central database and used by all other modules of the DMS suite. Distributor information may comprise personal contact information (e.g. address, telephone, facsimile, email etc.), including information about multiple contact points, information from background checks (e.g. education, previous relationships with financial services institutions, personal credentials etc.), financial information (e.g. bank address/account information and payment, advance, repayment history etc.), license and appointment information (e.g. state and product eligibility), including current and historical license and appointment data, information about errors and omissions coverage.

Distributor information may also comprise any other type of information associated with the distributor and/or the sales of product on behalf of the institution. Distributor administration module 115 may also provide services for creating and managing distributor database information, setting up organizational entities, such as sales teams, placing individual distributors in the teams, modifying the distributor information, and creating and managing a repository for data about selling agreements established between the financial services institutions and distributors. Also, distributor administration module 115 may provide services for defining and managing relationships between different organizations (e.g. such as the financial services institution and a

distributor or between regional directors and sales offices), identifying and managing calendar-based events associated with distributors such as selling agreement, licensing, and appointment renewals, background check renewals, and errors and omissions coverage renewals.

A licensing and appointments module 116 may also be integrated into the DMSS and configured to enable financial services institutions to manage the license and appointment credentials for distributors and to validate compliance with industry regulations. The licensing and appointment rules enforced by the DMS suite are applied to distributors managed by the system, whether they are employees of the financial services institution or employed by an external distributor. However, the licensing and appointment rules may be selectively enforced in the event that a user defines a set of rules defined a decision tree for performing selective enforcement.

Licensing and appointments module 116 may also provide several services comprising defining license/appointment types by company, state, and either product or product line, determining the license and appointment requirements for producers (e.g., distributors or sales representatives) based on their state of operation, the products the producer sells, the kind of compensation paid to such producers and their role, monitoring license and appointment information associated with individual producers on a calendar and schedule basis and determine when renewal application processing is required, managing

Ex. 1002 028/597

the license application process for renewals, updating licenses (e.g. for new products or states). In one embodiment of the invention, licensing and appointments module 116 includes the documentation and workflow for the application approval process providing services comprising managing the appointment application process for both renewals and new appointment requests, including the documentation and workflow for the application approval process, providing license and appointment checking as required (e.g. for sales compensation or processing new business), validating that licensing/appointment requirements are met and holding activity until requirements are met.

When selling agreements module 117 is integrated into the DMSS in accordance with one embodiment of the invention, the selling agreements module 117 enables a financial services institution to define and create individual business contracts with distributors. A selling agreement defines the scope and terms of the relationship between the parties involved, commission and bonus schedules, and documents describing the relationship. In one embodiment of the invention, each selling agreement defines a hierarchy of sales people that can sell products under that contract, it defines what products can be sold in that agreement, it defines what commission schedules can be used in that agreement, and it defines which sales people participate in which commission schedule. Selling agreements are built from pre-defined contract kit components customized during negotiations. For example, a selling agreement may be

formulated using contract kits comprised of components such as compensation components and document components. Each selling agreement is assembled by the system using rules (e.g., a component may be required, optional, or standard) defining the relationships between each of the components. Compensation components define the commission structure associated with a product to be sold and document components provide other information related to the agreement (e.g., contract terms etc...).

The distributor's performance is measured and commission is paid according to the terms of the agreement (e.g., defined in compensation components). In an embodiment of the invention, customizable contract kit components enable a financial services institution to define the content of contracts and the processes by which they are administered. The kits detail the rules and documentation required for the administration of the agreement. A financial services institution defines the events that may occur and provides a set of possible responses to each event using various contract kit components. Selling agreements module 117 may use contract kits to perform several tasks comprising: defining agreements that consist of contract components, defining the set of rules governing how contract kit components are combined into selling agreements for each distributor, managing the approval process for contract kit components and contract kits prior to their promotion to active use, activating contract kit components and contract kits for use, retiring contract kit components from active use, integrating with the commission engine to enable

compensation calculations based upon the parameters set in the selling agreement.

In an embodiment of the invention, DMSS comprises an integrated debt management module 118 which enables a financial services institution to manage distributor advances and repayments. The debt management module enables a user to define and manage the business rules and parameters for the approval and payment of advances (e.g., via an interface). A user may make adjustments to advance balances based on actual value received from commission and accelerate repayment schedules if commissions are insufficient. The debt management module enables a user to define the rules and parameters associated with advances. The debt management module enables a user to define the following: classes of distributors who qualify for advances, qualification criteria for advances (e.g. the distributor's length of service, sales history, and past earnings), ratio of advances to projected income, taking into account any outstanding advances, repayment schedule and interest rate to be paid, source of repayment income or the policy the advance is to be recouped from, whether the amount is a percentage or flat rate, accelerated repayment schedules. For example, if a distributor's income projections fall below repayments, a user may modify the repayment terms, a user may also perform other activities such as initiating advances and repayment schedules, and tracking performance of debts.

The DMSS may also comprise a payment module 119 that enables financial institutions to track and calculate payments to distributors. Payment module 119 (also referred to as a net pay module) determines a distributor's net pay by adjusting the party's total earned compensation (calculated by commission engine 125) according to a set of payment adjustment rules. The commission engine utilized in one embodiment of the invention is described in further detail in pending patent application serial number 09/081857, entitled "Method and Apparatus For Determining Commission", which in incorporated herein by reference. These rules can be used to capture repayment schedules for outstanding debt, and transfer payments to an alternate payee. In accordance with one embodiment of the invention, payment module 119 also allows splitting up net payments into individual disbursements, directing different parts of compensation to different accounts.

In one embodiment of the invention DMSS may also comprise a user manager application 140 which defines and restricts user access and usage of the DMS suite. The system may use role-based access control, where roles are given specific permissions to data and entities. Users of the DMS suite have several levels of usage and control in the application based on the pre-defined roles. A user may customize these roles through the application user manager 140.

In an embodiment of the invention, a workbench application 113 is provided to enable users to view and manage sales transactions and distributor performance data, and to run the DMS engine.

The DMSS comprises, in addition to modules and engines, a set of user interfaces 150. User interfaces comprise a browser-based system for managing the DMSS applications. This browser-based system may be implemented using any network enabling communication protocols and applications. For example, the browser-based user interface may include Java Server Pages, script based common gateway interface or any application capable of accessing the databases and producing intangible data that can be rendered by a client browser.

Information types:

In an embodiment of the invention, the DMSS comprises several types data stored in the databases and corresponding modules, and used in module-to-module, module-to-engine, and engine-to-engine communication. The system may represent such data in data objects. Compensation data and compensation rules data objects 132 store information for the agreements module of the DMSS. This data may include contract components such as quota levels, bonus rules, and commission-based rules for eligibility. Distributor data and producer data objects 133 store information about a financial services institution's distributors for the distributor administration 115 and the other modules of the DMSS. This data includes contact information, background checks, continuing education credits, and financial information.

Selling agreements data and selling agreement rules data objects 134 provides sharing data with the Agreements module 117 of the DMSS.

Information in this database includes rules for contracts between financial services institutions and distributors, data defining the terms of contracts, and commission and bonus schedules. License data and appointment data objects 135 are used by the license and appointments module 116 of the DMSS. This data includes license and appointment credentials and variations of license and appointment types (such as variations by state or product). The data is also used to validate that requirements for a license are met. Process rules data objects 136 contain information relating to the DMSS workflow service. This data includes agreement components and business rules and data. Report data objects 137 contain report data and agreement components and may share information with the report engine.

System Components Interactions

In an embodiment of the invention, modules perform their tasks and functions using the backbone 120. The backbone 120 communicates changes and updates to the rest of the applications. The Backbone also provides communication between the modules by sharing data and functions. The backbone 120 maintains data storage and retrieval, in addition to communicating changes and updates to the other modules. The backbone retrieves data from the database in response to requests from DMSS modules and engines and transmits that data to its requestor.

Ex. 1002 034/597

Figure 2 is flowchart showing the process of communicating between modules, the data processing engine, the DMSS backbone and the databases in an embodiment of the invention. In step 220 a request is received by the DMSS to perform a data processing task. This step involves starting the modules required to handle the data processing task. The module data processing task may require one or more services provided by specific data processing engines. The module determines, if a specific engine's services are needed in step 230 and may start the designated engine by issuing a request through the backbone in step 240. In one embodiment of the invention, the module calls directly to the engine and the engine loads data through the backbone. In either case, the engine may request the data necessary for processing the modules request in step 250 though the backbone. The backbone fetches the data from different sources of databases in step 260. The engine processes the modules request in step 270 and returns the processing result through the backbone to the module. The module completes the processing in step 280 and continues processing the data. The backbone updates the databases and other modules in the DMSS in step 290.

Figure 3 show a block diagram representing an example of interactions occurring within DMSS modules and engines in an embodiment of the invention. In this example, the selling agreements module 117 of the DMSS, acts through the workbench 113. The workbench 113 starts commission engine 125 by sending a request 310. In response, the engine obtains the appropriate agreements information from the databases via the backbone 120 for its calculations and

Ex. 1002 035/597

compensation functions. The commission engine gathers information about agreements from the database through the backbone. The commission engine identifies relevant data in the database and produces a set of objects for the selling agreements module. Once the engine has processed all the objects, it can generate payments based on the agreements. The resulting information is stored in the database for extraction by the DMSS applications.

Figure 5 provides an illustration of the process flow utilized in accordance with one or more embodiments of the invention. The figures shows that the system described above may be utilized to generate the selling agreement that defines a relationship between multiple parties (e.g., step 500). Once the selling agreement is generated the system may determine a commission amount associated with a sales transaction performed by one of the parties based on said selling agreement (e.g., step 502). However, before the system pays out the commission amount it may determine if the parties associated with the sales transaction conform to regulatory or business requirements (e.g., step 504). For example, the system may determine whether the parties are validly licensed or authorized to perform such sales transactions. If the second party is not validly licensed, the system may reject the sales transaction (e.g., step, 506). Once that determination is performed the system may distribute an appropriate payment (e.g., commission amount) to individuals associated with said sales transaction (e.g., step 508). In one embodiment of the invention, the distributed amount takes into account any deductions or credits (e.g., via the payment engine or debt

Ex. 1002 036/597

engine) that are to be applied to the commission amount. For example, the person responsible for the transaction (e.g., sales representative) may be paid some amount minus an amount owed.

Computer Execution Environment (Hardware)

An embodiment of the invention can be implemented as computer software in the form of computer readable code executed on a general purpose computer such as computer 400 illustrated in Figure 4, or in the form of byte code class files executable within a Java™ runtime environment running on such a computer, or in the form of byte codes running on a processor (or devices enabled to process byte codes) existing in a distributed environment (e.g., one or more processors on a network). A keyboard 410 and mouse 411 are coupled to a system bus 418. The keyboard and mouse are for introducing user input to the computer system and communicating that user input to processor 413. Other suitable input devices may be used in addition to, or in place of, the mouse 411 and keyboard 410. I/O (input/output) unit 419 coupled to system bus 418 represents such I/O elements as a printer, A/V (audio/video) I/O, etc.

Computer 400 includes a video memory 414, main memory 415 and mass storage 412, all coupled to system bus 418 along with keyboard 410, mouse 411 and processor 413. The mass storage 412 may include both fixed and removable media, such as magnetic, optical or magnetic optical storage systems or any other available mass storage technology. Bus 418 may contain, for example, thirty-two

Ex. 1002 037/597

address lines for addressing video memory 414 or main memory 415. The system bus 418 also includes, for example, a 64-bit data bus for transferring data between and among the components, such as processor 413, main memory 415, video memory 414 and mass storage 412. Alternatively, multiplex data/address lines may be used instead of separate data and address lines.

In one embodiment of the invention, the processor 413 is any suitable microprocessor or microcomputer for processing data. Main memory 415 is comprised of dynamic random access memory (DRAM). Video memory 414 is a dual-ported video random access memory. One port of the video memory 414 is coupled to video amplifier 416. The video amplifier 416 is used to drive the cathode ray tube (CRT) raster monitor 417. Video amplifier 416 is well known in the art and may be implemented by any suitable apparatus. This circuitry converts pixel data stored in video memory 414 to a raster signal suitable for use by monitor 417. Monitor 417 is a type of monitor suitable for displaying graphic images.

Computer 400 may also include a communication interface 420 coupled to bus 418. Communication interface 420 provides a two-way data communication coupling via a network link 421 to a local network 422. For example, if communication interface 420 is an integrated services digital network (ISDN) card or a modem, communication interface 420 provides a data communication connection to the corresponding type of telephone line, which comprises part of

network link 421. If communication interface 420 is a local area network (LAN) card, communication interface 420 provides a data communication connection via network link 421 to a compatible LAN. Wireless links are also possible. In any such implementation, communication interface 420 sends and receives electrical, electromagnetic or optical signals that carry digital data streams representing various types of information.

Network link 421 typically provides data communication through one or more networks to other data devices. For example, network link 421 may provide a connection through local network 422 to local server computer 423 or to data equipment operated by an Internet Service Provider (ISP) 424. ISP 424 in turn provides data communication services through the worldwide packet data communication network now commonly referred to as the "Internet" 425. Local network 422 and Internet 425 both use electrical, electromagnetic or optical signals that carry digital data streams. The signals through the various networks and the signals on network link 421 and through communication interface 420, which carry the digital data to and from computer 400, are exemplary forms of carrier waves transporting the information.

Computer 400 can send messages and receive data, including program code, through the network(s), network link 421, and communication interface 420. In the Internet example, remote server computer 426 might transmit a

requested code for an application program through Internet 425, ISP 424, local network 422 and communication interface 420.

Processor 413 may execute the received code as it is received, and/or stored in mass storage 412, or other non-volatile storage for later execution. In this manner, computer 400 may obtain application code in the form of a carrier wave.

Application code may be embodied in any form of computer program product. A computer program product comprises a medium configured to store or transport computer readable code, or in which computer readable code may be embedded. Some examples of computer program products are CD-ROM disks, ROM cards, floppy disks, magnetic tapes, computer hard drives, servers on a network, and carrier waves.

The computer systems programs, apparatus, and/or methods described above are for purposes of example only. An embodiment of the invention may be implemented in any type of computer system or programming or processing environment. Thus, a method and system for managing distributor information is described in conjunction with one or more specific embodiments. The invention is defined by the claims and their full scope of equivalents.

CLAIMS

What is claimed is:

1. A system for managing relationships between a first party and a second party comprising:

at least one processor;

memory coupled to said at least one processor;

said memory comprising a plurality of modules configured to manage distributor information;

said plurality of modules comprising a selling agreements module configured to generate a selling agreement;

said plurality of modules comprising a commission module configured to determine commission amounts associated with a sales transaction based on said selling agreement;

said plurality of modules comprising a licensing module configured to determine if a party associated with said sales transaction has a valid license;

said plurality of modules comprising a payment module for distributing payment associated with sales transaction to said party.

Ex. 1002 041/597

2. The system of claim 2 wherein said licensing module is further configured to determine if a party associated with said sales transaction comprises a valid appointment.

3. The system of claim 1 wherein said plurality of modules further comprises a distributor administration module configured to manage information associated with a plurality of distributors.

4. The system of claim 1 wherein said selling agreement comprises compensation components.

5. The system of claim 4 wherein said selling agreement comprises document components.

6. The system of claim 5 wherein said selling agreements module configured to generate said selling agreement utilizes a configuration engine to determine which of said compensation components and said document components to include.

7. The method of claim 6 wherein said commission module accesses a commission engine to determine said commission amounts.

8. The system of claim 1 wherein said selling agreement comprises a binding contract between an institution having at least one product and a distributor.

9. The system of claim 8 wherein said institution comprises financial institution.

10. The system of claim 8 wherein said product comprise financial product.

11. The system of claim 10 wherein said financial product comprises life insurance.

12. A system for managing relationships between a first party and a second party comprising:

a database source comprising a plurality of data objects representative of at least one distributing party, at least one selling agreement and at least one license or appointment associated with said at least one distributing party;

a distributor management engine configured to obtain at least one of said plurality of data objects from said database source and determine whether said at least one distributing party conforms with said at least one selling agreement and said at least one license or appointment is valid.

13. The system of claim 12 further comprising:

a backbone coupled to said distributor management engine, said backbone configured to transport said at least one of said plurality of data objects.

14. The system of claim 12 further comprising:

an interface for obtaining a plurality of business rules defining relationships between an institution and said at least one distributing party.

15. The system of claim 13 further comprising:

a commission engine configured to utilize said backbone to fetch said at least one selling agreement from said database source.

16. The system of claim 15 wherein said commission engine generates commission schemes utilized to model a set of selling agreement objects.

17. The system of claim 16 wherein said distributor management engine generates payments based on said selling agreement objects.

18. The system of claim 12 further comprising:

a workflow process engine configured to process workflow events.

19. The system of claim 18 wherein said workflow process events are determined by business rules defined by a user.

20. The system of claim 19 further comprising:

a commerce configuration engine configured to provide a configuration engine access to said business rules.

21. The system of claim 12 further comprising:

a report engine configured to generate a plurality of reports associated with said at least one distributing party.

22. The system of claim 21 wherein said report engine utilizes report templates to generate said plurality of reports.

23. The system of claim 12 further comprising:

a distributor administration module for managing said plurality of data objects.

24. The system of claim 12 further comprising:

a licensing and appointment module configured to enable an institution to manage said at least one license or appointments data object for at least one said distributor.

25. The system of claim 24 wherein said licensing and appointment module is configured to validate license or appointment compliance with a set of industry regulations by evaluating said at least one license or appointment data object.

26. The system of claim 12 further comprising:

a selling agreements module configured to enable said institution to define and create a business contract with said at least one distributing party.

27. The system of claim 26 wherein said selling agreements module manages a set of business rules governing how contract components are combined into said at least one selling agreement associated with each of said at least one distributing party.

28. The system of claim 27 further comprising:

a debt management module configured to enable said institution to manage distributor advances and repayments.

29. The system of claim 28 wherein said debt management module is utilized to define and manage a set of payment rules defining parameters for paying said at least one distributing party.

30. The system of claim 12 further comprising:

a net pay module enabling said institution to track and calculate payments to distributors.

31. The system of claim 12 wherein said institution comprises a financial services institution.

32. A system for managing relationships between a first party and a second party comprising:

an interface for obtaining a plurality of business rules defining relationships between an institution and at least one distributor;

a database source comprising a plurality of data objects representative of said at least one distributor, at least one selling agreement and at least one license or appointment associated with said at least one distributor;

a commission engine configured to determine a commission amount associated with said at least one distributor by evaluating said at least one selling agreement data object;

a backbone coupled to said distributor management engine, said backbone configured to transport said at least one of said plurality of data objects to a plurality of modules;

said plurality of modules comprising, a distributor administration module for managing said plurality of data objects;

said plurality of modules comprising, a licensing and appointment module configured to determine if said at least one license or appointment data object associated with said at least one distributor is in compliance with a set of industry regulations;

said plurality of modules comprising, a selling agreements module configured to enable said institution to define and create a selling agreement with said at least one distributor;

said plurality of modules comprising, a payment module configured to distribute said commission amount to said at least one distributor.

33. The system of claim 32 wherein said commission engine utilizes said backbone to fetch said at least one selling agreement from said database source.

34. The system of claim 32 further comprising:

a workflow process engine configured to process workflow events, said workflow process events determined by said business rules.

35. The system of claim 32 further comprising:

a commerce configuration engine configured to provide access to said business rules.

36. The system of claim 32 further comprising:

a report engine configured to generate a plurality of reports associated with said at least one distributor.

37. The system of claim 36 wherein said report engine utilizes report templates to generate said plurality of reports.

38. The system of claim 32 wherein said selling agreement comprises a contract between said institution and said at least one distributor.

39. The system of claim 38 wherein said selling agreements module manages a set of business rules governing how contract components are combined into said at least one selling agreement associated with each of said at least one distributors.

40. The system of claim 32 further comprising:

a debt management module configured to enable said institution to manage distributor advances and repayments.

41. The system of claim 28 wherein said debt management module is utilized to define and manage a set of payment rules defining parameters for paying said at least one distributor.

42. The system of claim 12 wherein said institution comprises a financial services institution.

43. A method for managing relationships between a first party and a second party comprising:

generating a selling agreement defining a relationship between a first party and a second party;

determining a commission amount associated with a sales transaction based on said selling agreement;

determining if said second party associated with said sales transaction has a valid license;

distributing said commission amount to individuals associated with said sales transaction.

44. The method of claim 43 further comprising:

determining if said second party associated with said sales transaction comprises a valid appointment.

45. The method of claim 43 wherein said selling agreement comprises compensation components.

Ex. 1002 050/597

46. The method of claim 45 wherein said selling agreement comprises document components.

47. The method of claim 43 wherein said generating said selling agreement further comprises:

obtain rules associated with said selling agreement;

determining which of said compensation components and said document components to include in said selling agreement based on said rules.

48. The method of claim 43 further comprising:

accessing a commission model to determine said commission amounts.

49. The method of claim 43 wherein said first party comprises an institution having at least one product to be sold by a second party.

50. The method of claim 49 wherein said second party comprises a distributor.

51. The method of claim 49 wherein said institution comprises a financial institution.

52. The method of claim 51 wherein said at least one product comprise financial product.

53. The method of claim 52 wherein said financial product comprises life insurance.

54. A computer program product comprising:

a computer usable medium comprising computer readable code for managing relationships between a first party and a second party comprising, said computer readable program code configured to:

generate a selling agreement defining a relationship between a first party and a second party;

determine a commission amount associated with a sales transaction based on said selling agreement;

determine if said second party associated with said sales transaction has a valid license;

distribute said commission amount to individuals associated with said sales transaction.

55. The computer program product of claim 54 further comprising computer readable program code configured to determine if said second party associated with said sales transaction comprises a valid appointment.

Ex. 1002 052/597

56. The computer program product of claim 54 wherein said selling agreement comprises compensation components.

57. The computer program product of claim 56 wherein said selling agreement comprises document components.

58. The computer program product of claim 54 wherein said computer readable program code configured to generate said selling agreement further comprises computer readable code configured to:

obtain rules associated with said selling agreement;

determining which of said compensation components and said document components to include in said selling agreement based on said rules.

59. The computer program product of claim 54 further comprising computer readable program code configured to access a commission model to determine said commission amounts.

60. The computer program product of claim 54 wherein said first party comprises an institution having at least one product to be sold by a second party.

61. The computer program product of claim 60 wherein said second party comprises a distributor.

62. The computer program product of claim 60 wherein said institution comprises a financial institution.

63. The computer program product of claim 60 wherein said at least one product comprises a financial product.

64. The computer program product of claim 63 wherein said financial product comprises life insurance.

ABSTRACT OF DISCLOSURE

An embodiment of the invention provides a system that enables financial services companies to manage and track information about a sales force. The system includes components for managing distributors information, for validating and tracking licenses and credentials, for creating customized contracts, and for maintaining compensation structures. The system allows for configuring compensations, providing financial services companies a toolkit for creating and modeling their complex commission schedules used to compensate their sales force. The system also provides modeling tools for agreements and contracts between a financial services company or provider and the distributors who sell products. The system has a multi-component architecture comprising multiple modules, multiple data processing engines, a backbone and multiple data sources. The processing modules carry out information processing using one or more data processing engines. The data processing provides the tools to fetch data from the databases and process it.

Figure 1

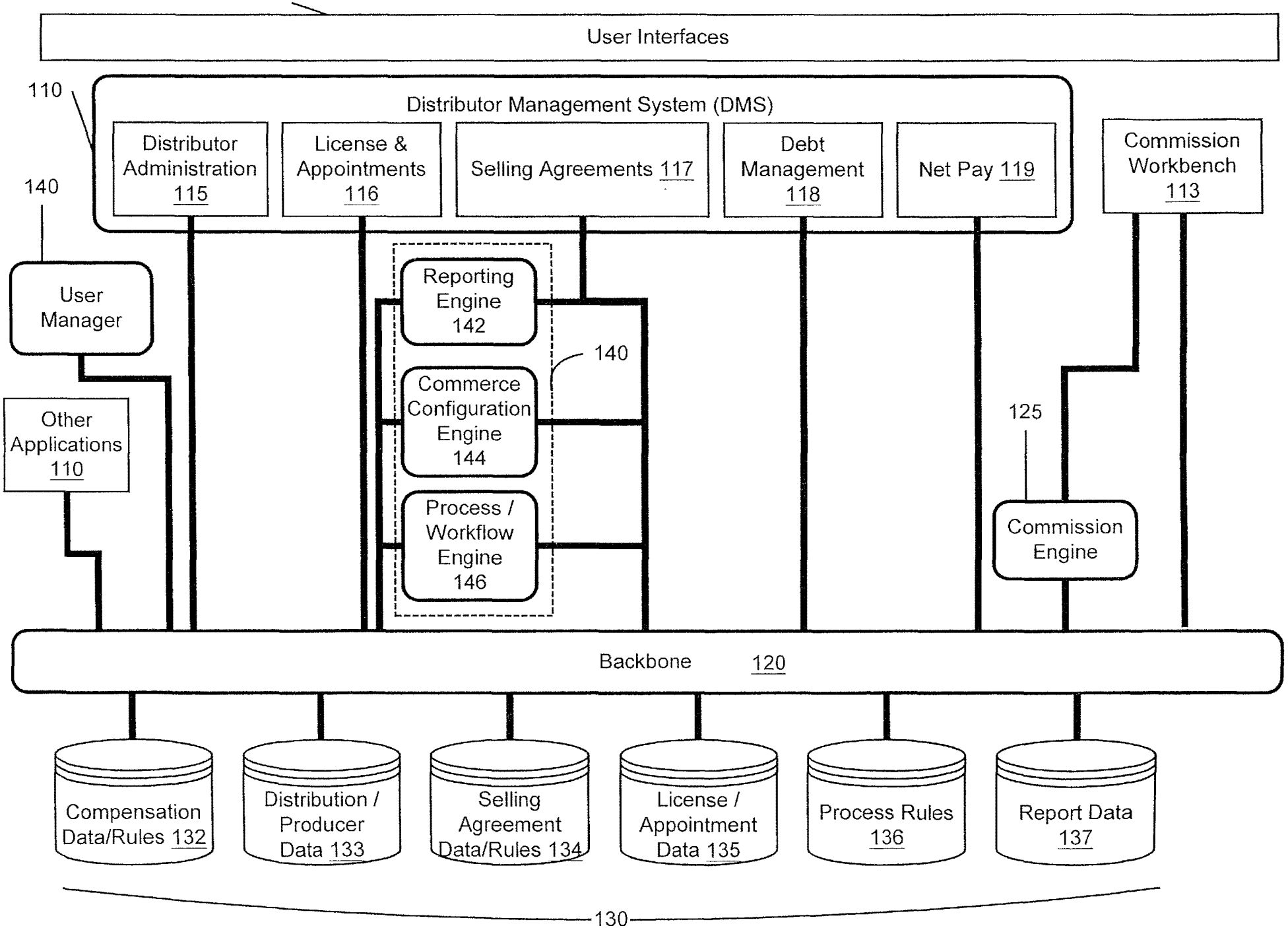
150
User Interfaces
110
Distributor Management System (DMS)
Distributor Administration 115
License & Appointments 116
Selling Agreements 117
Debt Management 118
Net Pay 119
Commission Workbench 113
140
User Manager
Other Applications 110
Reporting Engine 142
Commerce Configuration Engine 144
Process / Workflow Engine 146
140
125
Commission Engine
Backbone 120
Compensation Data/Rules 132
Distribution / Producer Data 133
Selling Agreement Data/Rules 134
License / Appointment Data 135
Process Rules 136
Report Data 137
130

Figure 2

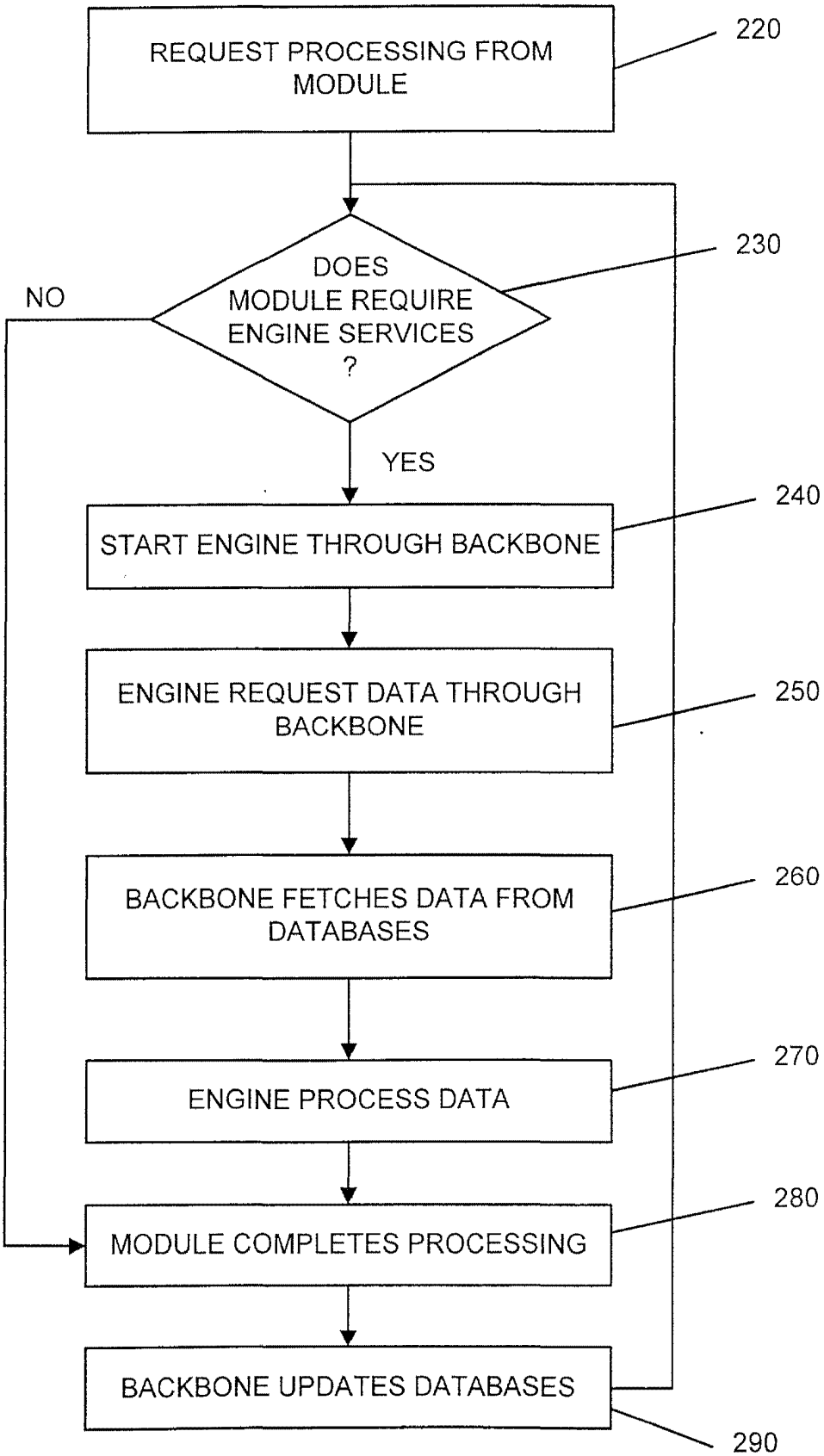

Ex. 1002 057/597

Figure 3

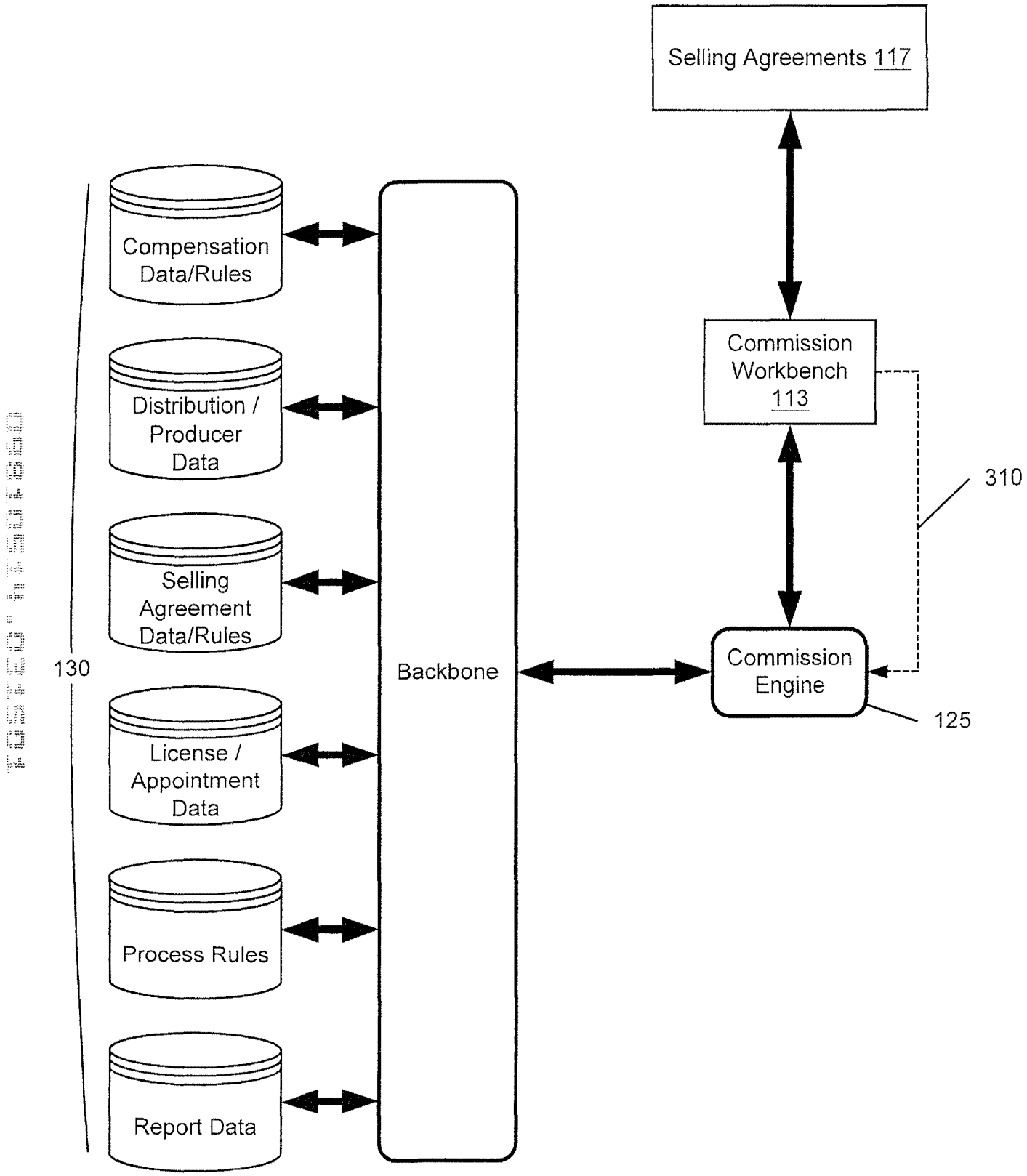

Selling Agreements 117
Commission Workbench 113
310
Commission Engine
125
Backbone
Compensation Data/Rules
Distribution / Producer Data
Selling Agreement Data/Rules
License / Appointment Data
Process Rules
Report Data
130

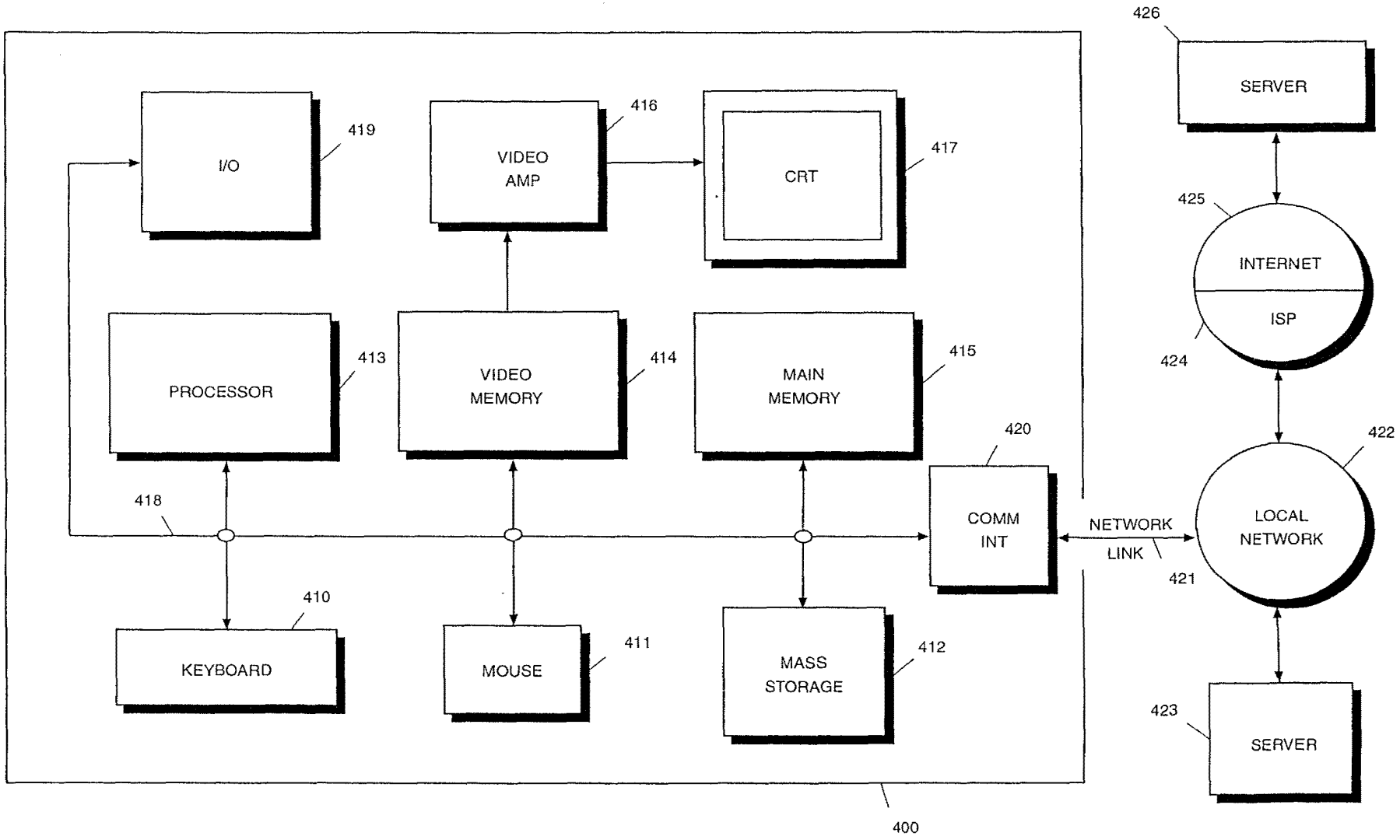

I/O
419
VIDEO AMP
416
CRT
417
PROCESSOR
413
VIDEO MEMORY
414
MAIN MEMORY
415
418
COMM INT
420
KEYBOARD
410
MOUSE
411
MASS STORAGE
412
400
NETWORK LINK
421
LOCAL NETWORK
422
SERVER
423
INTERNET
ISP
424
425
SERVER
426

FIGURE 4

03-19-01

A

jc839 U.S. PTO
03/15/01

Please type a plus sign (+) inside this box → ⊞

PTO/SB/05 (11-00)
Approved for use through 10/31/2002. OMB 0651-0032
U.S. Patent and Trademark Office; U.S. DEPARTMENT OF COMMERCE

Under the Paperwork Reduction Act of 1995, no persons are required to respond to a collection of information unless it displays a valid OMB control number

UTILITY PATENT APPLICATION TRANSMITTAL

(Only for new nonprovisional applications under 37 CFR 1.53(b))

Attorney Docket No.	85160.924
First Inventor	David CHAO
Title	Method and System for Managing Distributor Information
Express Mail Label No.	EL705171068US

jc872 U.S. PTO
09/810514
03/15/01

APPLICATION ELEMENTS

See MPEP chapter 600 concerning utility patent application contents.

1. ☐ Fee Transmittal Form (e.g., PTO/SB/17) *(Submit an original and a duplicate for fee processing)*
2. ☐ Applicant claims small entity status. See 37 CFR 1.27.
3. ☑ Specification [*Total Pages* 54] *(preferred arrangement set forth below)*
   - Descriptive title of the invention
   - Cross Reference to Related Applications
   - Statement Regarding Fed sponsored R & D
   - Reference to sequence listing, a table, or a computer program listing appendix
   - Background of the Invention
   - Brief Summary of the Invention
   - Brief Description of the Drawings *(if filed)*
   - Detailed Description
   - Claim(s)
   - Abstract of the Disclosure
4. ☑ Drawing(s) *(35 U.S.C. 113)* [*Total Sheets* 4]
5. Oath or Declaration [*Total Pages*]
   - a. ☐ Newly executed (original or copy)
   - b. ☐ Copy from a prior application (37 CFR 1.63 (d)) *(for continuation/divisional with Box 18 completed)*
     - i. ☐ DELETION OF INVENTOR(S) Signed statement attached deleting inventor(s) named in the prior application, see 37 CFR 1.63(d)(2) and 1.33(b).
6. ☐ Application Data Sheet. See 37 CFR 1.76

ADDRESS TO:

Assistant Commissioner for Patents
Box Patent Application
Washington, DC 20231

7. ☐ CD-ROM or CD-R in duplicate, large table or Computer Program *(Appendix)*
8. Nucleotide and/or Amino Acid Sequence Submission *(if applicable, all necessary)*
   - a. ☐ Computer Readable Form (CRF)
   - b. Specification Sequence Listing on:
     - i. ☐ CD-ROM or CD-R (2 copies); or
     - ii. ☐ paper
   - c. ☐ Statements verifying identity of above copies

ACCOMPANYING APPLICATION PARTS

9. ☐ Assignment Papers (cover sheet & document(s))
10. ☐ 37 CFR 3.73(b) Statement *(when there is an assignee)* ☐ Power of Attorney
11. ☐ English Translation Document *(if applicable)*
12. ☐ Information Disclosure Statement (IDS)/PTO-1449 ☐ Copies of IDS Citations
13. ☐ Preliminary Amendment
14. ☑ Return Receipt Postcard (MPEP 503) *(Should be specifically itemized)*
15. ☐ Certified Copy of Priority Document(s) *(if foreign priority is claimed)*
16. ☐ Request and Certification under 35 U.S.C. 122 (b)(2)(B)(i). Applicant must attach form PTO/SB/35 or its equivalent.
17. ☐ Other: .....

18. If a CONTINUING APPLICATION, *check appropriate box, and supply the requisite information below and in a preliminary amendment, or in an Application Data Sheet under 37 CFR 1.76:*

☐ Continuation ☐ Divisional ☐ Continuation-in-part (CIP) of prior application No.: ____/____

Prior application information: *Examiner* ____ *Group Art Unit:* ____

For CONTINUATION OR DIVISIONAL APPS only: The entire disclosure of the prior application, from which an oath or declaration is supplied under Box 5b, is considered a part of the disclosure of the accompanying continuation or divisional application and is hereby incorporated by reference. The incorporation can only be relied upon when a portion has been inadvertently omitted from the submitted application parts.

19. CORRESPONDENCE ADDRESS

☐ *Customer Number or Bar Code Label* (Insert Customer No. or Attach bar code label here) or ☐ *Correspondence address below*

Name	The Hecker Law Group				
Address	1925 Century Park East Suite #2300				
City	Los Angeles	*State*	California	*Zip Code*	90067
Country	USA	*Telephone*	(310)286-0377	*Fax*	(310)286-0488

Name (Print/Type)	Gary A. Hecker	*Registration No. (Attorney/Agent)*	31,023
Signature		*Date*	03-15-01

Burden Hour Statement: This form is estimated to take 0.2 hours to complete. Time will vary depending upon the needs of the individual case. Any comments on the amount of time you are required to complete this form should be sent to the Chief Information Officer, U.S. Patent and Trademark Office, Washington, DC 20231. DO NOT SEND FEES OR COMPLETED FORMS TO THIS ADDRESS. SEND TO: Assistant Commissioner for Patents, Box Patent Application, Washington, DC 20231.

UNITED STATES PATENT APPLICATION

FOR

METHOD AND SYSTEM FOR MANAGING DISTRIBUTOR INFORMATION

Docket # 85160.924

INVENTORS:

DAVID CHAO
BRIAN BLOUNT
CHARLES ERICKSON
SHARI GHARAVY
CHENG ZHOU
JOSHUA TOUB

PREPARED BY:

THE HECKER LAW GROUP
1925 Century Park East
Suite 2300
Los Angeles, CA 90067

(310) 286-0377

FIELD OF THE INVENTION

This invention relates to the field of computer technology. More specifically, the invention relates to a method and system for managing distributor information.

Portions of the disclosure of this patent document contain material that is subject to copyright protection. The copyright owner has no objection to the facsimile reproduction by anyone of the patent document or the patent disclosure as it appears in the Patent and Trademark Office file or records, but otherwise reserves all copyrights whatsoever.

BACKGROUND

Managing sales and distribution channels has become a difficult task in today's business environment where it is necessary to quickly and fairly administer incentives for salespeople and distribution channel partners while coping with regulatory issues. To keep revenues growing and keep up with customer demands, financial services providers have to move quickly even when regulation, competition and new sales distribution channels inhibit growth. Management is expected to provide new opportunities for improved revenues and margins, while providing customers with better, faster information and services.

The distribution channel model within the financial services industry is very complex. Products are sold across multiple distribution channels and the workforce is very fluid, with individual distributors working for multiple companies and engaging in multiple agreements with service providers. There are regulatory constraints on the sales force in that all distributors who sell products must be licensed and appointed, or authorized, to sell those products. Financial services companies must track all of this information about their sales force, maintain a history of all of this information, provide incentive based compensation to their sales force, and calculate their compensation based upon numerous variables. Consequently, any plan for distribution channel management must consider the number of channels, the number of distributors, compensation complexity, regulatory and licensing requirements and the number and types of products that will be sold.

Financial service companies are being driven by increased competition to consider the use of independent agents in place of captive sales staff. Firms may wish to enhance and reward cross distribution channel interactions. They must be able to enhance distributor reporting and communication and effectively manage independent brokers and captive sales staff. They must reduce the time required to market new products and implement new compensation plans and differentiate themselves based on services offered to customers. In addition, they

must be able to rapidly integrate new distribution channel acquisitions and grow distribution capabilities, while reducing administration costs.

Cost avoidance is essential as mergers and acquisitions have led to many disparate systems, some of which are antiquated. Firms must reduce implementation time for new products and compensation plans on these antiquated systems and reduce the potential for overpayment. The goal must be a reduction in the overall cost of administration. Accordingly, these companies must interact with the producers (of sales) using preferred methods and quickly model new and creative compensation plans, while consolidating compensation administration systems.

In order to provide sales representatives with an incentive to sell as much as possible, or to sell more of a desired product or products at certain prices, sales organizations create incentive plans where commissions are provided or offered to the sales representatives when specific sales goals or targets are achieved during particular period of time. In addition, an incentive plan may apportion credit to everyone on a sales representative's sales team, to the representative's manager, or someone other than the sales representative himself. Sales representatives typically receive compensation based on a salary, the hours worked, and/or on the goods or services sold. When basing compensation on transactions, specifically on the goods or services sold, sales representatives

receive a commission that can be based on profits, net sales, the number of products sold, or some other variable. Other primary compensation includes gross dealer concessions. Secondary compensation includes expense allowances, persistency bonuses and overrides that can be allocated among sales teams and accumulated over time if desired.

Sales compensation for direct and indirect channels can be one of the most effective levers for aligning sales performance with business goals. Unfortunately, designing and administering effective incentive programs is a difficult management challenge. The management of a business can spend a great deal of time and money in developing incentive plans. In the prior art, the creation and distribution of incentive plans is a slow process that is prone to error. It can take months to implement a new compensation plan, and dependencies on computer software can frustrate sales managers who want to make even simple changes. Moreover, a lack of measurement tools can make it impossible to develop a "closed loop", continuous improvement process. Businesses must be able to design, process, and communicate sophisticated incentive programs that drive revenue growth across all sales channels. Businesses need to streamline the administration of quotas, territories, and commissions, and also require tools to measure and improve the effectiveness of incentive programs. This would greatly simplify the management challenge of aligning tactical business performance with strategic objectives, making it

possible to react more quickly and effectively to changes in market and competitive conditions.

Quotas are a necessary component of most sales compensation plans, yet they are notoriously difficult to administer, especially when they involve multiple hierarchies. Not only is it easy to introduce problems like double counting and under- or over-payment, but also changes typically require long turnaround times while they are implemented by changes in computer software. The management of sales quotas is difficult and there is a need to be able to manage them easily and accurately, allowing business users to assign quotas by territory or position and across multiple hierarchies. Managers also require a capability to accurately track sales results and forecast future performance. Needed elements include the ability to tie quotas between positions and sales teams or positions and territories, make sales projections, a provision for quick and easy quota setting and editing, and a simple interface for use from the field.

Managing sales territories involves analyzing past results, assigning territories, and forecasting future sales performance. For most organizations, it is a difficult and time-consuming process with the result that it is commonly only undertaken once a year. Unfortunately, market conditions change continuously, making it practically impossible to keep sales territories aligned with business needs for more than a short period of time. A more automated process for

territory management is needed to allow large sales organizations to keep up with the market.

Another need of firms in financial services is an ability to manage sales producer payment accounts by defining multiple accounts per representative, setting up payment rules for each account and procedures for adjustments. Loan issuance against customer accounts must also be managed. Loan and repayment schedules, and appropriate records, must be maintained. As a part of this activity, it is necessary to track eligible compensation against parameters established for the loan and to be able to track collection of the loan and initiate charge-back and from the producer if appropriate.

In the area of distributor administration, firms also would like to manage a shared repository for all producer information, including personal information, professional information and preferences. There is a need to provide a view of the roles played by individuals with an organization, and active selling agreements and reporting relationships. Firms would like a centralized distributor repository in order to be able to view, report and compensate producer relationships individually and holistically. In addition, they must reduce errors or miscalculations leading to overpayment. At the same time, these firms must assist new agent distribution channels in learning how to sell

new types of products and create new distribution capabilities for existing products.

Credential management is a critical issue for many firms. They must track professional accreditation including licenses, appointments, National Association of Securities Dealers (NASD) registration and continuing education requirements for the maintenance of these professional accreditations to ensure that they are represented by appropriately credentialed representatives. This need is made more acute by constantly changing government rules and regulations, as well as by different regulations imposed by the different jurisdictions in which a firm operates. Firms must determine when renewal processing is required and manage new and renewal application processes to ensure regulatory compliance in every jurisdiction. A further problem is presented by representatives who may move from jurisdiction to jurisdiction in the course of their representation of a firm. Further, there is substantial turnover in representation resulting in a continuing need to ascertain the credentials of new representatives as well as to maintain contact with former representatives in the event that issues arise from their former representation.

In order to appropriately manage their representatives, firms must also be able to create customized contracts and selling agreements by combining reusable compensation components and personalizing agreement templates to fit

individual producers. A selling contract defines a hierarchy of sales people that can sell products under that contract and it defines what products can be sold under that agreement. The selling contract also specifies commission schedules and identifies which sales people participate under a particular commission schedule. As multiple versions of such agreements may come into use over time, a procedure is needed to allow multiple users to maintain agreements through versioning, or version control, and a method must be provided to manage the approval process for agreement components and templates.

Any distribution management channel solution, in order to be useful, must have a capability for error correction, including manually inputting and adjusting all transaction information, making retroactive adjustments and viewing and managing ledger items. Other features that are desirable include the ability to cancel and rerun transactions.

Many financial services firms would like to be able to communicate distribution channel management information over the Internet so that producers can view the state of their relationship with a firm, including profile information, licenses, appointments, product information, contract and compensation information. Firms would also like to be able to perform modeling and "what if" analysis and have the ability to capture historical data to make strategic decisions about the effectiveness of future plans. A set of Web-

based incentive management products that can be deployed to practically any sales or distribution channel would be useful. Such tools could greatly simplify the burden of designing, forecasting, launching, measuring, and refining incentives programs.

Computer software is necessary to implement the solution to these problems and fulfill the perceived needs just described. Such software commonly utilizes multiple related functions and data structures. To encapsulate these related functions and data structures, the software often utilizes a standard object oriented programming (OOP) language approach.

In conclusion, there is a need for a solution, implemented on a computer in an object oriented programming environment, that manages the contracts between the manufacturers of a product, which may include financial services, and the distributors of their product in an industry where there is multiple channel selling, a fluid workforce, and regulatory constraints. This solution should track information, such as contact points, payment methods, and the organizational hierarchies, on all parties in the system. It must manage regulatory information and ensure that distributors are licensed and appointed to sell the products manufactured, or distributed, by the provider. In addition, the solution must allow for compensation configuration and provide financial services companies with a toolkit for creating and modeling their complex

commission schedules used to compensate their sales forces. This should include a provision for charge-back of commissions if appropriate. Also, the solution must model contracts between the financial services company, or provider, and the distributors who sell the products. The solution must calculate compensation for all distributors and should allow for access through the Internet.

Docket Alarm

SUMMARY OF THE INVENTION

The invention provides a method and system for managing contracts between manufactures of a product and the distributors of their product in an industry comprising multiple channel selling, a fluid workforce, and regulatory constraints. An embodiment of the invention provides a system that enables financial services companies to track information about their sales force, maintain a history of all of the information, provide incentive based compensation to their sales force, and calculate their compensation based upon numerous variables. The system referred to hereinafter as Distributor Management System Suite (DMSS) comprises a suite of applications that provide tracking information, such as contact points, payment methods, and organizational hierarchies on all parties in the system, managing regulatory information and ensuring that distributors are licensed and appointed to sell the products manufactured by the provider. The DMSS provides financial services institutions with the means to maintain distributor records, contracts, and commissions. The DMSS includes components for managing information related to distributors, validating and tracking licenses, creating customized contracts, and maintaining compensation structures. The information stored in the DMSS database includes contract components and rules, distributor financial information, bonus schedules, and license and appointment data.

Ex. 1002 072/597

In an embodiment of the invention, the DMSS allows for configuring compensations, providing financial services companies a toolkit for creating and modeling their complex commission schedules used to compensate their sales force. The DMSS provides modeling capabilities for agreements and contracts between a financial services company or provider and the distributors who sell products. In an embodiment of the invention, the DMSS calculates compensations for all distributors, processes payment and manages dept.

In an embodiment of the invention, the DMSS comprises several components comprising management modules, a backbone, one or more data processing engines, databases, and storage management components. The backbone allows for data exchange between components of the DMSS comprising module-to-engine and engine-to-database data exchange.

In an embodiment of the invention, the DMSS comprises data processing engines. These system components are designed to draw information from the DMSS databases, process the information, and store the result in a database for further use by the DMSS modules and engines.

In an embodiment of the invention, the DMSS is composed of several modules comprising a distributor administration module, a license and appointment module, a selling agreements module, a debt management module, and a payment module. These modules interact with the backbone and engines

to maintain relationships between financial services institutions and their distributors.

Attorney Docket No. 85160.924

DESCRIPTION OF THE DRAWINGS

Figure 1 shows a block diagram representing an embodiment of a system that utilizes the Distributor Management System Suite (DMSS).

Figure 2 comprises a flowchart showing the process of communicating between modules, the data processing engine, the DMSS backbone and the databases in an embodiment of the invention.

Figure 3 show a block diagram representing an example of interactions occurring within DMSS modules and engines in an embodiment of the invention.

Figure 4 shows a hardware environment for executing one or more aspects of the invention.

Ex. 1002 075/597

DETAILED DESCRIPTION

The invention provides a method and system for managing distributor information. In the following description, numerous specific details are set forth in order to provide a more thorough understanding of the invention. It will be apparent, however, to one skilled in the art, that the invention may be practiced without these specific details. In other instances, well-known features have not been described in detail in order to avoid unnecessarily obscuring the invention.

System Overview:

An embodiment of the invention comprises an extensible method for managing relationships between institutions (e.g., suppliers/ manufacturers) of a product or service and the distributors of their product. Aspects of the invention are targeted at industries where there is multiple channel selling, a fluid workforce, and regulatory constraints upon products sales. For example, systems embodying the invention provide a way to manage the agreements that financial services companies have with the distributors who sell their products. Thus, organizations such as life insurances companies may utilize embodiments of the invention to manage the sale and distribution of life insurance plans in a way that coincides with the regulatory constraints of government organizations.

Ex. 1002 076/597

Such companies can utilize embodiments of the invention to track information about the company's sales force, maintain a transaction history of the information associated with multiple products, provide incentive based compensation to the company's sales force, and calculate sales force compensation based upon numerous variables. For example, the system referred to hereinafter as Distributor Management System Suite (DMSS) comprises a suite of applications that provide tracking information, such as contact points, payment methods, and organizational hierarchies on all parties in the system, managing regulatory information and ensuring that distributors are licensed and appointed to sell the products manufactured by the provider.

In one embodiment of the invention, DMSS comprises a suite of multiple engines and modules each configured to provide functionality that helps manage the flow of information between distributors and suppliers. Generally, DMSS provides users with a mechanism for managing information related to distributors, validating and tracking licenses, creating customized contracts, and maintaining compensation structures. To perform such functions the system configured in accordance with one embodiment of the invention stores information such as contract components and rules, distributor financial information, bonus schedules, and license and appointment data. The engines and modules of DMSS may, for example, be configured to perform at least the following functions:

1) Provide financial services institutions with the means to maintain organization hierarchies associated with parties on the system (e.g., distributor records), track information such as contracts, and payment methods (e.g. how a distributor is paid).

2) Manage regulatory information and ensures that distributors are licensed and appointed to sell the products manufactured by the provider.

3) Perform compensation configuration. It provides financial services companies a toolkit for creating and modeling their complex commission schedules used to compensate their sales force. For example, the system may calculate compensation for all distributors by building on top of a commission engine and using the engine, the commission models, and the agreement models to calculate the compensation for all of its sales force.

4) Models agreements or contracts between the financial services company or provider and the distributors who sell the products. These agreements are termed 'Selling Agreements'. A selling agreement defines a hierarchy of sales people that can sell products under that contract, it

defines what products can be sold in that agreement, it defines what commission schedules can be used in that agreement, and it defines which sales people participate in which commission schedule. The DMSS may utilize the terms defined in selling agreements to calculate compensations for all distributors.

5) Managing information related to distributors, validating and tracking licenses, creating customized contracts, and maintaining compensation structures. The information stored in the DMSS database comprises information such as contract components and rules, distributor financial information, bonus schedules, and license and appointment data.

6) Manages payment and debt to distributors / sales representatives (e.g., net-pay and debt management).

In accordance with one embodiment of the invention DMSS is built on top of a commission engine configured to model and calculate commission for the sales force. A commission engine takes two inputs, a commission model and a set of transactions, and generates ledger items (that correspond to payments) as output. Each transaction represents a physical sales transaction, such as distributor selling a life insurance policy. The commission model represents two

critical pieces of data: the sales team hierarchy and the commission schedules. The sales team hierarchy comprises a hierarchy of all sales people that will be responsible for a transaction. The commission schedules define formula for translating transactions into ledger items. Commission schedules may be modeled through quota, bonus, and plan objects. The commission model utilized in one or more embodiments of the invention is described in further detail in pending patent application serial number 09/081857, entitled "Method and Apparatus For Determining Commission", which in incorporated herein by reference.

DMSS complements the commission engine in that it provides a mechanism for modeling selling agreements with commission models. In accordance with one embodiment of the invention, at least one commission model exists for each selling agreement in DMSS. Agreement hierarchies are modeled within the sales team hierarchy. The agreement commission schedules are stored in accordance with one embodiment of the invention in the commission model's quota, bonus, and plan objects.

The commission schedules used in an agreement are often the same or similar across agreements. Therefore, the agreements are put together from contract kits. A contract kit contains a set of commission schedules (also referred to as compensation components) that can be used within an agreement. Each compensation component and contract kit is versioned, and the compensation

Ex. 1002 080/597

component contains the commission schedule information needed to generate a complete commission schedule in the commission model. Each agreement is then created from one contract kit, and when the agreement is created a user can selected which components from the kit to include in the agreement. When a new version of a component or kit is created, a user can select to cascade the new version to all the agreements that use it, or to leave the agreement using the old version.

DMS provides additional functionality by allowing dependencies between models through linked hierarchies and pooling agreements. It is often common for one party to receive credit or rollup from somebody's work in a different agreement. This is accomplished through linked hierarchies. A distributor (Ted) in one agreement (AG1) make be linked to another distributor (Fred) in another agreement (AG2). This allows transactions for Fred and all of his descendants to also be credited to Ted.

It is also common for multiple parties to want to share work across agreements. For example, one may wish to use one quota to calculate qualification on a quota level, and another quota to calculate payout. In this example, one would want several parties performance to contribute to the qualification quota, even parties in different agreements. Pooling agreements provide this functionality, by pooling work from different agreement participants from potentially different agreements into one quota. An extensible

object model in accordance with one embodiment of the invention provides a framework for representing such agreements.

System Components:

Figure 1 shows a block diagram representing an embodiment of a system that utilizes the Distributor Management System Suite (DMSS) 105. As shown in Figure 1, the DMSS comprises management modules 110, a backbone 120 allowing data exchange between applications and databases, and between applications, a commission engine 125, a number of additional data processing engines 140, and data storage and storage management components 130. The DMSS is also configured to allow for the addition of more applications and plugins 110 to provide additional services.

In an embodiment of the invention, the DMS comprises several modules and applications. In this example, the system is used by financial organizations to manage sales agreements, distributor credentials, and sales compensation. However, the reader should note that the system embodying the invention is also applicable outside of the financial services industry and that the term financial organization is utilized for illustrative purpose only. The invention is not limited solely to the financial services industry, but may be applied to other industries. For example, the system may be utilized in any business environment having a need to determine if individuals associated with a sale are appropriately licensed, compensated. The invention may also be applied to

Ex. 1002 082/597

other business situations were companies must operate pursuant to the terms of an agreement.

DMSS comprises a DMS Database which may exchange data with modules and engines via backbone 120. In accordance with one embodiment of the invention, backbone 120 comprises an information infrastructure used to integrate applications 110, engines 140 and 125, and databases 130. Backbone 120 facilitates communication between data resources and modules, and integration of different computing equipment, including local networks, web interfaces, and back-office systems. Thus, backbone 120 provides a mechanism for maintaining data storage and retrieval, in addition to communicating changes and updates to the other modules. Backbone 120 is configured to retrieve data from the database in response to the needs of DMSS modules and engines and transmit that data to its requestor. Backbone 120 provides an extensible framework suitable for building and integrating applications customized for the needs of individual clients. Backbone 120 receives information from the DMSS modules and acts on it, storing the resulting object or sending it back to the module. As modules perform their tasks and functions, the backbone communicates changes and updates to the rest of the applications. Backbone 120 also provides communication between the modules by sharing data and functions. The DMSS and other applications 110, engines 140, and databases 130 may execute bi-directional requests and responses across backbone 120. Backbone 120 is configured to retrieve data from the database in response to the needs of DMSS

Ex. 1002 083/597

modules and engines and transmit that data to its requestor. Backbone 120 eliminates some of the need for developing custom code, and allows developers to integrate new applications without knowing all the other applications in the system.

Engines 140 and 125 may be launched by the DMSS modules via the backbone and draw information from the DMSS databases. The engines process the information, and store the resulting object in a database or the backbone for further use by the DMSS modules and engines. A commission engine 125, configured in accordance with one embodiment of the invention, utilizes backbone 120 to gather information about agreements from the database. Commission engine 125 may, for example, identify relevant data in the database and produce a set of objects. Once the engine has processed all the objects, commission engine 125 can generate payments based on the agreements.

Workflow process engine 146, operating in accordance with one embodiment of the invention, starts and responds to workflow events received from the DMSS modules through backbone 120. Workflow process engine 146 completes the desired workflow event and sends that information back through backbone 120. In an embodiment of the invention workflow engine 146 enables users to create and run one or more business processes. The processes may be created in a formatted data input (e.g. XML or Java) and become objects (business rules) in the backbone. The workflow engine 146 enables the flow of

Ex. 1002 084/597

information in the DMSS and provides users with a customizable mechanism for creating business processes.

The DMSS may comprise a commerce configuration engine 144 that allows users to define and enforce the set of rules governing how contract kit components (e.g., document components and compensation components) are combined into agreements for each distributor. The internal processes utilized by configuration engine 144 are described in further detail in United States Patent Number 5,825,651, entitled "Method and Apparatus For Maintaining and Configuring System", which in incorporated herein by reference. The commerce configuration engine 144 utilizes the contract kit for creating agreements between a distributor and a financial services company.

A reporting engine 142 may be added to the DMSS and configured to generate reports and store such reports in the database. Each component of an agreement has a corresponding document, generated from report templates, which describes that component. The DMSS may also have additional modules comprising a distributor administration module 115, a license and appointment module 116, a selling agreements module 117, a debt management module 118, and a payment module to which is may be referred to also as Net Pay module 119. These modules interact with backbone 120 and engines to maintain relationships between financial services institutions and their distributors.

Ex. 1002 085/597

In one embodiment of the invention, distributor administration module 115 enables a financial services institution to record and track a broad set of information associated with the institution's distributors. The distributor information may be stored in a central database and used by all other modules of the DMS suite. Distributor information may comprise personal contact information (e.g. address, telephone, facsimile, email etc.), including information about multiple contact points, information from background checks (e.g. education, previous relationships with financial services institutions, personal credentials etc.), financial information (e.g. bank address/account information and payment, advance, repayment history etc.), license and appointment information (e.g. state and product eligibility), including current and historical license and appointment data, information about errors and omissions coverage.

Distributor information may also comprise any other type of information associated with the distributor and/or the sales of product on behalf of the institution. Distributor administration module 115 may also provide services for creating and managing distributor database information, setting up organizational entities, such as sales teams, placing individual distributors in the teams, modifying the distributor information, and creating and managing a repository for data about selling agreements established between the financial services institutions and distributors. Also, distributor administration module 115 may provide services for defining and managing relationships between different organizations (e.g. such as the financial services institution and a

distributor or between regional directors and sales offices), identifying and managing calendar-based events associated with distributors such as selling agreement, licensing, and appointment renewals, background check renewals, and errors and omissions coverage renewals.

A licensing and appointments module 116 may also be integrated into the DMSS and configured to enable financial services institutions to manage the license and appointment credentials for distributors and to validate compliance with industry regulations. The licensing and appointment rules enforced by the DMS suite are applied to distributors managed by the system, whether they are employees of the financial services institution or employed by an external distributor. However, the licensing and appointment rules may be selectively enforced in the event that a user defines a set of rules defined a decision tree for performing selective enforcement.

Licensing and appointments module 116 may also provide several services comprising defining license/appointment types by company, state, and either product or product line, determining the license and appointment requirements for producers (e.g., distributors or sales representatives) based on their state of operation, the products the producer sells, the kind of compensation paid to such producers and their role, monitoring license and appointment information associated with individual producers on a calendar and schedule basis and determine when renewal application processing is required, managing

the license application process for renewals, updating licenses (e.g. for new products or states). In one embodiment of the invention, licensing and appointments module 116 includes the documentation and workflow for the application approval process providing services comprising managing the appointment application process for both renewals and new appointment requests, including the documentation and workflow for the application approval process, providing license and appointment checking as required (e.g. for sales compensation or processing new business), validating that licensing/appointment requirements are met and holding activity until requirements are met.

When selling agreements module 117 is integrated into the DMSS in accordance with one embodiment of the invention, the selling agreements module 117 enables a financial services institution to define and create individual business contracts with distributors. A selling agreement defines the scope and terms of the relationship between the parties involved, commission and bonus schedules, and documents describing the relationship. In one embodiment of the invention, each selling agreement defines a hierarchy of sales people that can sell products under that contract, it defines what products can be sold in that agreement, it defines what commission schedules can be used in that agreement, and it defines which sales people participate in which commission schedule. Selling agreements are built from pre-defined contract kit components customized during negotiations. For example, a selling agreement may be

formulated using contract kits comprised of components such as compensation components and document components. Each selling agreement is assembled by the system using rules (e.g., a component may be required, optional, or standard) defining the relationships between each of the components. Compensation components define the commission structure associated with a product to be sold and document components provide other information related to the agreement (e.g., contract terms etc...).

The distributor's performance is measured and commission is paid according to the terms of the agreement (e.g., defined in compensation components). In an embodiment of the invention, customizable contract kit components enable a financial services institution to define the content of contracts and the processes by which they are administered. The kits detail the rules and documentation required for the administration of the agreement. A financial services institution defines the events that may occur and provides a set of possible responses to each event using various contract kit components. Selling agreements module 117 may use contract kits to perform several tasks comprising: defining agreements that consist of contract components, defining the set of rules governing how contract kit components are combined into selling agreements for each distributor, managing the approval process for contract kit components and contract kits prior to their promotion to active use, activating contract kit components and contract kits for use, retiring contract kit components from active use, integrating with the commission engine to enable

compensation calculations based upon the parameters set in the selling agreement.

In an embodiment of the invention, DMSS comprises an integrated debt management module 118 which enables a financial services institution to manage distributor advances and repayments. The debt management module enables a user to define and manage the business rules and parameters for the approval and payment of advances (e.g., via an interface). A user may make adjustments to advance balances based on actual value received from commission and accelerate repayment schedules if commissions are insufficient. The debt management module enables a user to define the rules and parameters associated with advances. The debt management module enables a user to define the following: classes of distributors who qualify for advances, qualification criteria for advances (e.g. the distributor's length of service, sales history, and past earnings), ratio of advances to projected income, taking into account any outstanding advances, repayment schedule and interest rate to be paid, source of repayment income or the policy the advance is to be recouped from, whether the amount is a percentage or flat rate, accelerated repayment schedules. For example, if a distributor's income projections fall below repayments, a user may modify the repayment terms, a user may also perform other activities such as initiating advances and repayment schedules, and tracking performance of debts.

The DMSS may also comprise a payment module 119 that enables financial institutions to track and calculate payments to distributors. Payment module 119 (also referred to as a net pay module) determines a distributor's net pay by adjusting the party's total earned compensation (calculated by commission engine 125) according to a set of payment adjustment rules. The commission engine utilized in one embodiment of the invention is described in further detail in pending patent application serial number 09/081857, entitled "Method and Apparatus For Determining Commission", which in incorporated herein by reference. These rules can be used to capture repayment schedules for outstanding debt, and transfer payments to an alternate payee. In accordance with one embodiment of the invention, payment module 119 also allows splitting up net payments into individual disbursements, directing different parts of compensation to different accounts.

In one embodiment of the invention DMSS may also comprise a user manager application 140 which defines and restricts user access and usage of the DMS suite. The system may use role-based access control, where roles are given specific permissions to data and entities. Users of the DMS suite have several levels of usage and control in the application based on the pre-defined roles. A user may customize these roles through the application user manager 140. In an embodiment of the invention, a workbench application 113 is provided to enable users to view and manage sales transactions and distributor performance data, and to run the DMS engine.

The DMSS comprises, in addition to modules and engines, a set of user interfaces 150. User interfaces comprise a browser-based system for managing the DMSS applications. This browser-based system may be implemented using any network enabling communication protocols and applications. For example, the browser-based user interface may include Java Server Pages, script based common gateway interface or any application capable of accessing the databases and producing intangible data that can be rendered by a client browser.

Information types:

In an embodiment of the invention, the DMSS comprises several types data stored in the databases and corresponding modules, and used in module-to-module, module-to-engine, and engine-to-engine communication. The system may represent such data in data objects. Compensation data and compensation rules data objects 132 store information for the agreements module of the DMSS. This data may include contract components such as quota levels, bonus rules, and commission-based rules for eligibility. Distributor data and producer data objects 133 store information about a financial services institution's distributors for the distributor administration 115 and the other modules of the DMSS. This data includes contact information, background checks, continuing education credits, and financial information.

Selling agreements data and selling agreement rules data objects 134 provides sharing data with the Agreements module 117 of the DMSS.

Information in this database includes rules for contracts between financial services institutions and distributors, data defining the terms of contracts, and commission and bonus schedules. License data and appointment data objects 135 are used by the license and appointments module 116 of the DMSS. This data includes license and appointment credentials and variations of license and appointment types (such as variations by state or product). The data is also used to validate that requirements for a license are met. Process rules data objects 136 contain information relating to the DMSS workflow service. This data includes agreement components and business rules and data. Report data objects 137 contain report data and agreement components and may share information with the report engine.

System Components Interactions

In an embodiment of the invention, modules perform their tasks and functions using the backbone 120. The backbone 120 communicates changes and updates to the rest of the applications. The Backbone also provides communication between the modules by sharing data and functions. The backbone 120 maintains data storage and retrieval, in addition to communicating changes and updates to the other modules. The backbone retrieves data from the database in response to requests from DMSS modules and engines and transmits that data to its requestor.

Figure 2 is flowchart showing the process of communicating between modules, the data processing engine, the DMSS backbone and the databases in an embodiment of the invention. In step 220 a request is received by the DMSS to perform a data processing task. This step involves starting the modules required to handle the data processing task. The module data processing task may require one or more services provided by specific data processing engines. The module determines, if a specific engine's services are needed in step 230 and may start the designated engine by issuing a request through the backbone in step 240. In one embodiment of the invention, the module calls directly to the engine and the engine loads data through the backbone. In either case, the engine may request the data necessary for processing the modules request in step 250 though the backbone. The backbone fetches the data from different sources of databases in step 260. The engine processes the modules request in step 270 and returns the processing result through the backbone to the module. The module completes the processing in step 280 and continues processing the data. The backbone updates the databases and other modules in the DMSS in step 290.

Figure 3 show a block diagram representing an example of interactions occurring within DMSS modules and engines in an embodiment of the invention. In this example, the selling agreements module 117 of the DMSS, acts through the workbench 113. The workbench 113 starts commission engine 125 by sending a request 310. In response, the engine obtains the appropriate agreements information from the databases via the backbone 120 for its calculations and

Ex. 1002 094/597

compensation functions. The commission engine gathers information about agreements from the database through the backbone. The commission engine identifies relevant data in the database and produces a set of objects for the selling agreements module. Once the engine has processed all the objects, it can generate payments based on the agreements. The resulting information is stored in the database for extraction by the DMSS applications.

Figure 5 provides an illustration of the process flow utilized in accordance with one or more embodiments of the invention. The figures shows that the system described above may be utilized to generate the selling agreement that defines a relationship between multiple parties (e.g., step 500). Once the selling agreement is generated the system may determine a commission amount associated with a sales transaction performed by one of the parties based on said selling agreement (e.g., step 502). However, before the system pays out the commission amount it may determine if the parties associated with the sales transaction conform to regulatory or business requirements (e.g., step 504). For example, the system may determine whether the parties are validly licensed or authorized to perform such sales transactions. If the second party is not validly licensed, the system may reject the sales transaction (e.g., step, 506). Once that determination is performed the system may distribute an appropriate payment (e.g., commission amount) to individuals associated with said sales transaction (e.g., step 508). In one embodiment of the invention, the distributed amount takes into account any deductions or credits (e.g., via the payment engine or debt

engine) that are to be applied to the commission amount. For example, the person responsible for the transaction (e.g., sales representative) may be paid some amount minus an amount owed.

Computer Execution Environment (Hardware)

An embodiment of the invention can be implemented as computer software in the form of computer readable code executed on a general purpose computer such as computer 400 illustrated in Figure 4, or in the form of byte code class files executable within a Java™ runtime environment running on such a computer, or in the form of byte codes running on a processor (or devices enabled to process byte codes) existing in a distributed environment (e.g., one or more processors on a network). A keyboard 410 and mouse 411 are coupled to a system bus 418. The keyboard and mouse are for introducing user input to the computer system and communicating that user input to processor 413. Other suitable input devices may be used in addition to, or in place of, the mouse 411 and keyboard 410. I/O (input/output) unit 419 coupled to system bus 418 represents such I/O elements as a printer, A/V (audio/video) I/O, etc.

Computer 400 includes a video memory 414, main memory 415 and mass storage 412, all coupled to system bus 418 along with keyboard 410, mouse 411 and processor 413. The mass storage 412 may include both fixed and removable media, such as magnetic, optical or magnetic optical storage systems or any other available mass storage technology. Bus 418 may contain, for example, thirty-two

address lines for addressing video memory 414 or main memory 415. The system bus 418 also includes, for example, a 64-bit data bus for transferring data between and among the components, such as processor 413, main memory 415, video memory 414 and mass storage 412. Alternatively, multiplex data/address lines may be used instead of separate data and address lines.

In one embodiment of the invention, the processor 413 is any suitable microprocessor or microcomputer for processing data. Main memory 415 is comprised of dynamic random access memory (DRAM). Video memory 414 is a dual-ported video random access memory. One port of the video memory 414 is coupled to video amplifier 416. The video amplifier 416 is used to drive the cathode ray tube (CRT) raster monitor 417. Video amplifier 416 is well known in the art and may be implemented by any suitable apparatus. This circuitry converts pixel data stored in video memory 414 to a raster signal suitable for use by monitor 417. Monitor 417 is a type of monitor suitable for displaying graphic images.

Computer 400 may also include a communication interface 420 coupled to bus 418. Communication interface 420 provides a two-way data communication coupling via a network link 421 to a local network 422. For example, if communication interface 420 is an integrated services digital network (ISDN) card or a modem, communication interface 420 provides a data communication connection to the corresponding type of telephone line, which comprises part of

network link 421. If communication interface 420 is a local area network (LAN) card, communication interface 420 provides a data communication connection via network link 421 to a compatible LAN. Wireless links are also possible. In any such implementation, communication interface 420 sends and receives electrical, electromagnetic or optical signals that carry digital data streams representing various types of information.

Network link 421 typically provides data communication through one or more networks to other data devices. For example, network link 421 may provide a connection through local network 422 to local server computer 423 or to data equipment operated by an Internet Service Provider (ISP) 424. ISP 424 in turn provides data communication services through the worldwide packet data communication network now commonly referred to as the "Internet" 425. Local network 422 and Internet 425 both use electrical, electromagnetic or optical signals that carry digital data streams. The signals through the various networks and the signals on network link 421 and through communication interface 420, which carry the digital data to and from computer 400, are exemplary forms of carrier waves transporting the information.

Computer 400 can send messages and receive data, including program code, through the network(s), network link 421, and communication interface 420. In the Internet example, remote server computer 426 might transmit a

requested code for an application program through Internet 425, ISP 424, local network 422 and communication interface 420.

Processor 413 may execute the received code as it is received, and/or stored in mass storage 412, or other non-volatile storage for later execution. In this manner, computer 400 may obtain application code in the form of a carrier wave.

Application code may be embodied in any form of computer program product. A computer program product comprises a medium configured to store or transport computer readable code, or in which computer readable code may be embedded. Some examples of computer program products are CD-ROM disks, ROM cards, floppy disks, magnetic tapes, computer hard drives, servers on a network, and carrier waves.

The computer systems programs, apparatus, and/or methods described above are for purposes of example only. An embodiment of the invention may be implemented in any type of computer system or programming or processing environment. Thus, a method and system for managing distributor information is described in conjunction with one or more specific embodiments. The invention is defined by the claims and their full scope of equivalents.

CLAIMS

What is claimed is:

1. A system for managing relationships between a first party and a second party comprising:

at least one processor;

memory coupled to said at least one processor;

said memory comprising a plurality of modules configured to manage distributor information;

said plurality of modules comprising a selling agreements module configured to generate a selling agreement;

said plurality of modules comprising a commission module configured to determine commission amounts associated with a sales transaction based on said selling agreement;

said plurality of modules comprising a licensing module configured to determine if a party associated with said sales transaction has a valid license;

said plurality of modules comprising a payment module for distributing payment associated with sales transaction to said party.

Ex. 1002 100/597

2. The system of claim 2 wherein said licensing module is further configured to determine if a party associated with said sales transaction comprises a valid appointment.

3. The system of claim 1 wherein said plurality of modules further comprises a distributor administration module configured to manage information associated with a plurality of distributors.

4. The system of claim 1 wherein said selling agreement comprises compensation components.

5. The system of claim 4 wherein said selling agreement comprises document components.

6. The system of claim 5 wherein said selling agreements module configured to generate said selling agreement utilizes a configuration engine to determine which of said compensation components and said document components to include.

7. The method of claim 6 wherein said commission module accesses a commission engine to determine said commission amounts.

8. The system of claim 1 wherein said selling agreement comprises a binding contract between an institution having at least one product and a distributor.

9. The system of claim 8 wherein said institution comprises financial institution.

10. The system of claim 8 wherein said product comprise financial product.

11. The system of claim 10 wherein said financial product comprises life insurance.

12. A system for managing relationships between a first party and a second party comprising:

a database source comprising a plurality of data objects representative of at least one distributing party, at least one selling agreement and at least one license or appointment associated with said at least one distributing party;

a distributor management engine configured to obtain at least one of said plurality of data objects from said database source and determine whether said at least one distributing party conforms with said at least one selling agreement and said at least one license or appointment is valid.

13. The system of claim 12 further comprising:

a backbone coupled to said distributor management engine, said backbone configured to transport said at least one of said plurality of data objects.

14. The system of claim 12 further comprising:

an interface for obtaining a plurality of business rules defining relationships between an institution and said at least one distributing party.

15. The system of claim 13 further comprising:

a commission engine configured to utilize said backbone to fetch said at least one selling agreement from said database source.

16. The system of claim 15 wherein said commission engine generates commission schemes utilized to model a set of selling agreement objects.

17. The system of claim 16 wherein said distributor management engine generates payments based on said selling agreement objects.

18. The system of claim 12 further comprising:

a workflow process engine configured to process workflow events.

19. The system of claim 18 wherein said workflow process events are determined by business rules defined by a user.

20. The system of claim 19 further comprising:

a commerce configuration engine configured to provide a configuration engine access to said business rules.

21. The system of claim 12 further comprising:

a report engine configured to generate a plurality of reports associated with said at least one distributing party.

22. The system of claim 21 wherein said report engine utilizes report templates to generate said plurality of reports.

23. The system of claim 12 further comprising:

a distributor administration module for managing said plurality of data objects.

24. The system of claim 12 further comprising:

a licensing and appointment module configured to enable an institution to manage said at least one license or appointments data object for at least one said distributor.

25. The system of claim 24 wherein said licensing and appointment module is configured to validate license or appointment compliance with a set of industry regulations by evaluating said at least one license or appointment data object.

26. The system of claim 12 further comprising:

a selling agreements module configured to enable said institution to define and create a business contract with said at least one distributing party.

27. The system of claim 26 wherein said selling agreements module manages a set of business rules governing how contract components are combined into said at least one selling agreement associated with each of said at least one distributing party.

28. The system of claim 27 further comprising:

a debt management module configured to enable said institution to manage distributor advances and repayments.

29. The system of claim 28 wherein said debt management module is utilized to define and manage a set of payment rules defining parameters for paying said at least one distributing party.

30. The system of claim 12 further comprising:

a net pay module enabling said institution to track and calculate payments to distributors.

31. The system of claim 12 wherein said institution comprises a financial services institution.

32. A system for managing relationships between a first party and a second party comprising:

an interface for obtaining a plurality of business rules defining relationships between an institution and at least one distributor;

a database source comprising a plurality of data objects representative of said at least one distributor, at least one selling agreement and at least one license or appointment associated with said at least one distributor;

a commission engine configured to determine a commission amount associated with said at least one distributor by evaluating said at least one selling agreement data object;

a backbone coupled to said distributor management engine, said backbone configured to transport said at least one of said plurality of data objects to a plurality of modules;

said plurality of modules comprising, a distributor administration module for managing said plurality of data objects;

said plurality of modules comprising, a licensing and appointment module configured to determine if said at least one license or appointment data object associated with said at least one distributor is in compliance with a set of industry regulations;

said plurality of modules comprising, a selling agreements module configured to enable said institution to define and create a selling agreement with said at least one distributor;

said plurality of modules comprising, a payment module configured to distribute said commission amount to said at least one distributor.

33. The system of claim 32 wherein said commission engine utilizes said backbone to fetch said at least one selling agreement from said database source.

34. The system of claim 32 further comprising:

a workflow process engine configured to process workflow events, said workflow process events determined by said business rules.

35. The system of claim 32 further comprising:

a commerce configuration engine configured to provide access to said business rules.

36. The system of claim 32 further comprising:

a report engine configured to generate a plurality of reports associated with said at least one distributor.

37. The system of claim 36 wherein said report engine utilizes report templates to generate said plurality of reports.

38. The system of claim 32 wherein said selling agreement comprises a contract between said institution and said at least one distributor.

39. The system of claim 38 wherein said selling agreements module manages a set of business rules governing how contract components are combined into said at least one selling agreement associated with each of said at least one distributors.

40. The system of claim 32 further comprising:

a debt management module configured to enable said institution to manage distributor advances and repayments.

41. The system of claim 28 wherein said debt management module is utilized to define and manage a set of payment rules defining parameters for paying said at least one distributor.

42. The system of claim 12 wherein said institution comprises a financial services institution.

43. A method for managing relationships between a first party and a second party comprising:

generating a selling agreement defining a relationship between a first party and a second party;

determining a commission amount associated with a sales transaction based on said selling agreement;

determining if said second party associated with said sales transaction has a valid license;

distributing said commission amount to individuals associated with said sales transaction.

44. The method of claim 43 further comprising:

determining if said second party associated with said sales transaction comprises a valid appointment.

45. The method of claim 43 wherein said selling agreement comprises compensation components.

46. The method of claim 45 wherein said selling agreement comprises document components.

47. The method of claim 43 wherein said generating said selling agreement further comprises:

obtain rules associated with said selling agreement;

determining which of said compensation components and said document components to include in said selling agreement based on said rules.

48. The method of claim 43 further comprising:

accessing a commission model to determine said commission amounts.

49. The method of claim 43 wherein said first party comprises an institution having at least one product to be sold by a second party.

50. The method of claim 49 wherein said second party comprises a distributor.

51. The method of claim 49 wherein said institution comprises a financial institution.

52. The method of claim 51 wherein said at least one product comprise financial product.

53. The method of claim 52 wherein said financial product comprises life insurance.

54. A computer program product comprising:

a computer usable medium comprising computer readable code for managing relationships between a first party and a second party comprising, said computer readable program code configured to:

generate a selling agreement defining a relationship between a first party and a second party;

determine a commission amount associated with a sales transaction based on said selling agreement;

determine if said second party associated with said sales transaction has a valid license;

distribute said commission amount to individuals associated with said sales transaction.

55. The computer program product of claim 54 further comprising computer readable program code configured to determine if said second party associated with said sales transaction comprises a valid appointment.

56. The computer program product of claim 54 wherein said selling agreement comprises compensation components.

57. The computer program product of claim 56 wherein said selling agreement comprises document components.

58. The computer program product of claim 54 wherein said computer readable program code configured to generate said selling agreement further comprises computer readable code configured to:

obtain rules associated with said selling agreement;

determining which of said compensation components and said document components to include in said selling agreement based on said rules.

59. The computer program product of claim 54 further comprising computer readable program code configured to access a commission model to determine said commission amounts.

60. The computer program product of claim 54 wherein said first party comprises an institution having at least one product to be sold by a second party.

61. The computer program product of claim 60 wherein said second party comprises a distributor.

62. The computer program product of claim 60 wherein said institution comprises a financial institution.

63. The computer program product of claim 60 wherein said at least one product comprises a financial product.

64. The computer program product of claim 63 wherein said financial product comprises life insurance.

Ex. 1002 113/597

ABSTRACT OF DISCLOSURE

An embodiment of the invention provides a system that enables financial services companies to manage and track information about a sales force. The system includes components for managing distributors information, for validating and tracking licenses and credentials, for creating customized contracts, and for maintaining compensation structures. The system allows for configuring compensations, providing financial services companies a toolkit for creating and modeling their complex commission schedules used to compensate their sales force. The system also provides modeling tools for agreements and contracts between a financial services company or provider and the distributors who sell products. The system has a multi-component architecture comprising multiple modules, multiple data processing engines, a backbone and multiple data sources. The processing modules carry out information processing using one or more data processing engines. The data processing provides the tools to fetch data from the databases and process it.

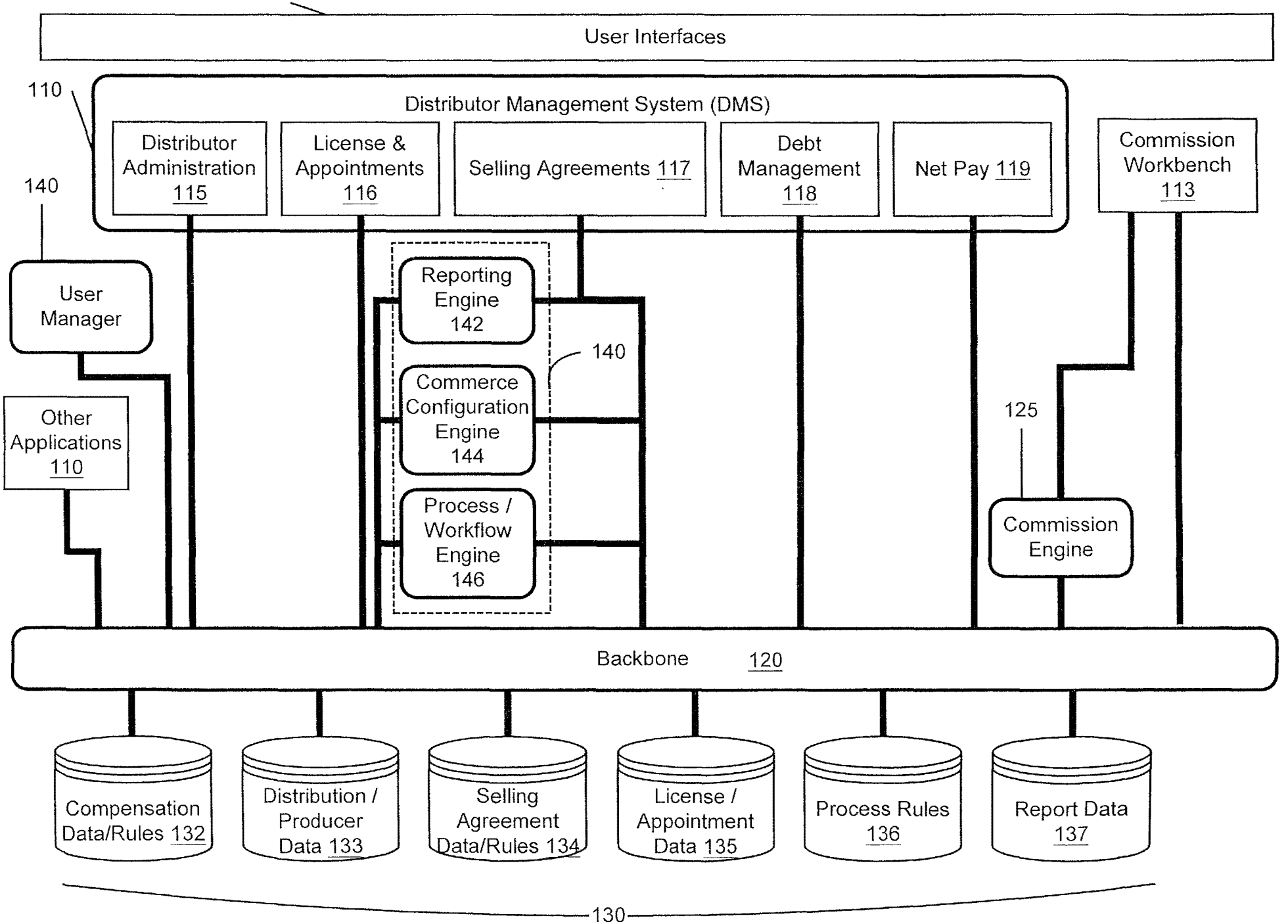
150
User Interfaces
110
Distributor Management System (DMS)
Distributor Administration 115
License & Appointments 116
Selling Agreements 117
Debt Management 118
Net Pay 119
Commission Workbench 113
140
User Manager
Reporting Engine 142
140
Commerce Configuration Engine 144
Process / Workflow Engine 146
Other Applications 110
125
Commission Engine
Backbone 120
Compensation Data/Rules 132
Distribution / Producer Data 133
Selling Agreement Data/Rules 134
License / Appointment Data 135
Process Rules 136
Report Data 137
130

Figure 1

Figure 2

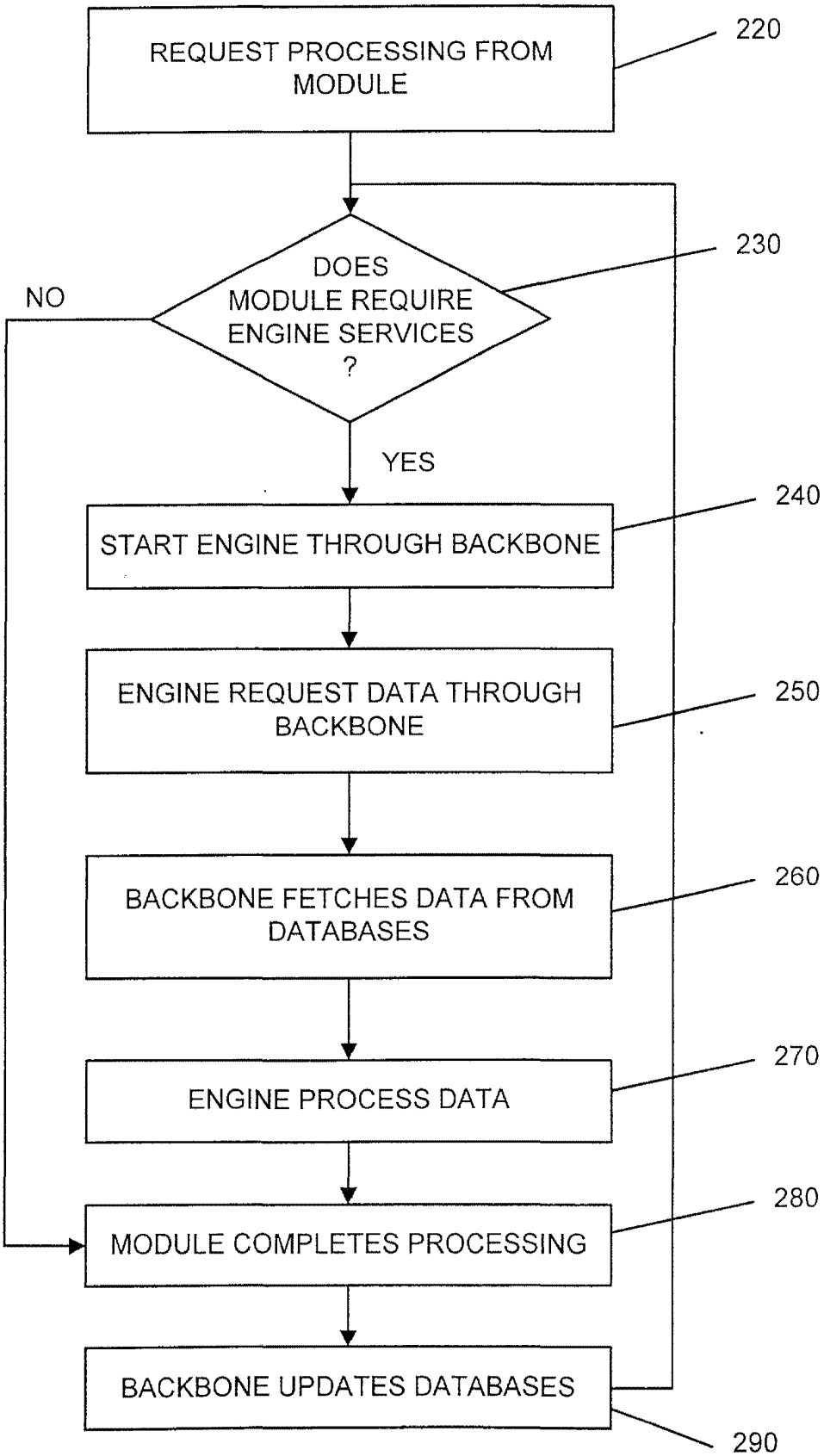

Petitioner - Ex. 1002 116/597

Figure 3

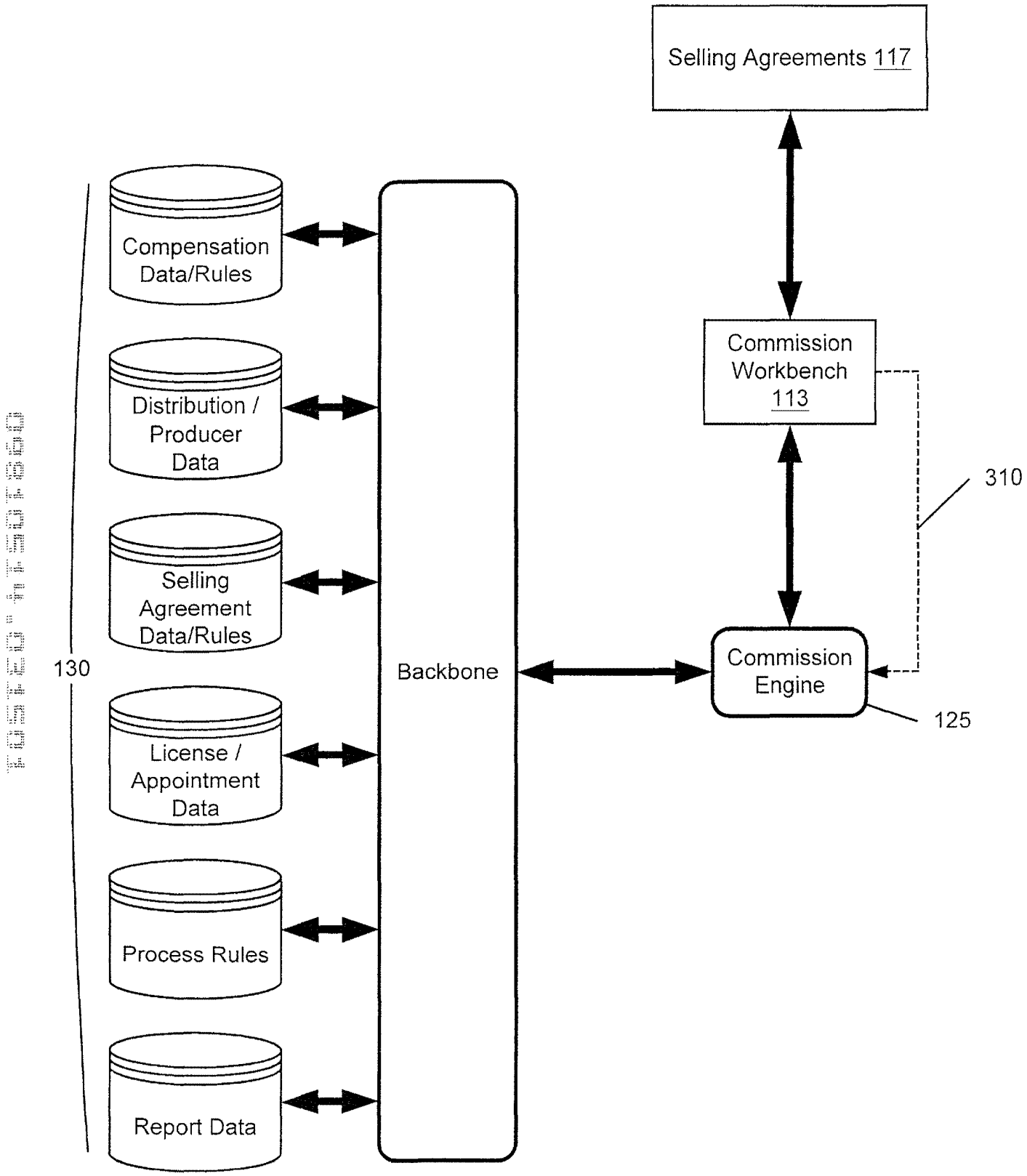

Exhibit 1002 - Page 117 of 597

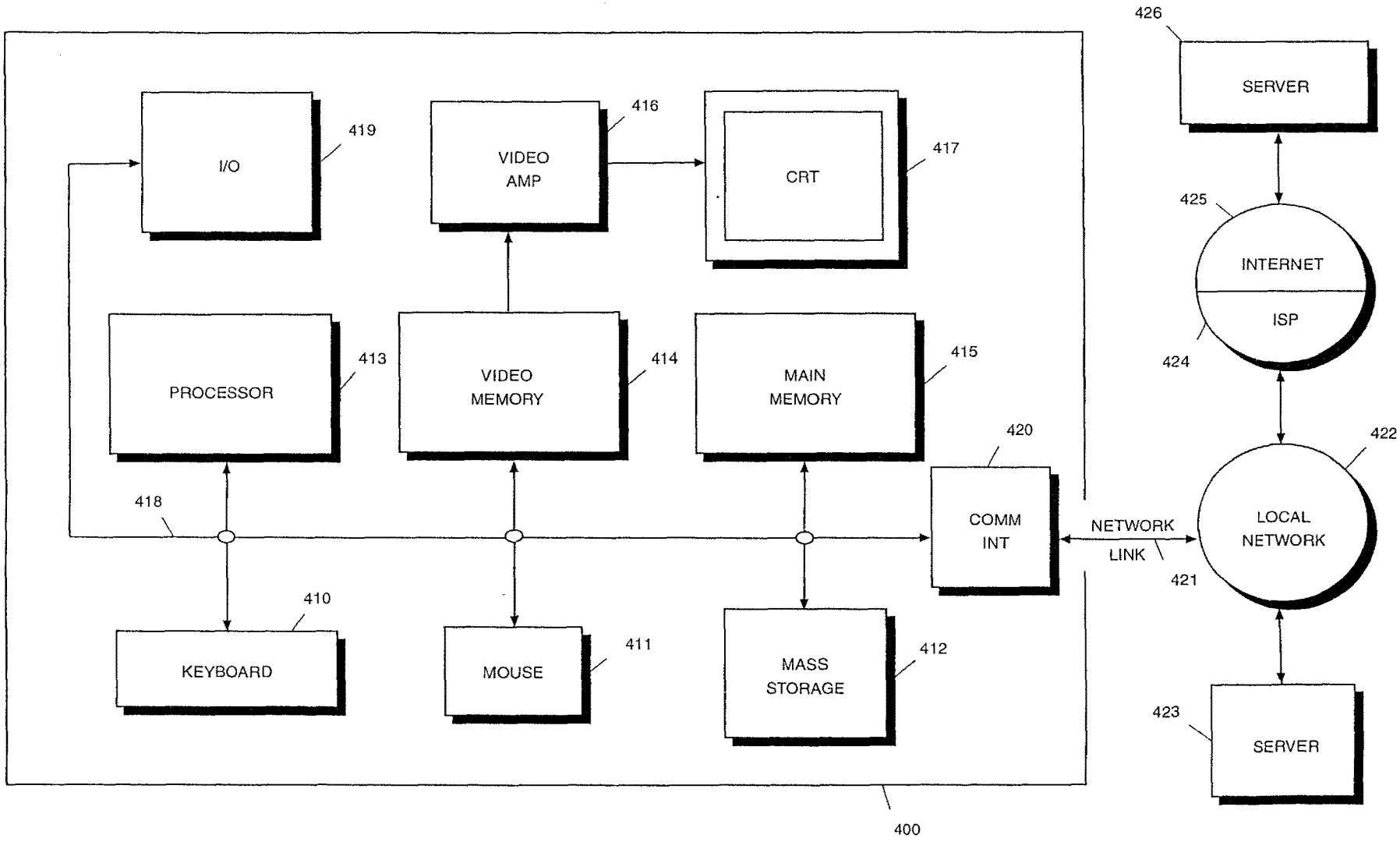

I/O
419
VIDEO AMP
416
CRT
417
PROCESSOR
413
VIDEO MEMORY
414
MAIN MEMORY
415
418
COMM INT
420
KEYBOARD
410
MOUSE
411
MASS STORAGE
412
400
NETWORK LINK
421
LOCAL NETWORK
422
SERVER
423
INTERNET
ISP
424
425
SERVER
426

FIGURE 4

BEST AVAILABLE COPY

PATENT APPLICATION FEE DETERMINATION RECORD
Effective October 1, 2000

Application or Docket Number

CLAIMS AS FILED - PART I

	(Column 1)	(Column 2)
TOTAL CLAIMS	64	
FOR	NUMBER FILED	NUMBER EXTRA
TOTAL CHARGEABLE CLAIMS	64 minus 20=	* 44
INDEPENDENT CLAIMS	5 minus 3 =	* 2
MULTIPLE DEPENDENT CLAIM PRESENT		☐

* If the difference in column 1 is less than zero, enter "0" in column 2

SMALL ENTITY TYPE ☐		OR	OTHER THAN SMALL ENTITY	
RATE	FEE		RATE	FEE
BASIC FEE	355.00	OR	BASIC FEE	710.00
X$ 9=		OR	X$18=	792.00
X40=		OR	X80=	160.00
+135=		OR	+270=	
TOTAL		OR	TOTAL	1662.00

CLAIMS AS AMENDED - PART II

AMENDMENT A

	(Column 1)		(Column 2)	(Column 3)
	CLAIMS REMAINING AFTER AMENDMENT		HIGHEST NUMBER PREVIOUSLY PAID FOR	PRESENT EXTRA
Total	*	Minus	**	=
Independent	*	Minus	***	=
FIRST PRESENTATION OF MULTIPLE DEPENDENT CLAIM				☐

SMALL ENTITY		OR	OTHER THAN SMALL ENTITY	
RATE	ADDITIONAL FEE		RATE	ADDITIONAL FEE
X$ 9=		OR	X$18=	
X40=		OR	X80=	
+135=		OR	+270=	
TOTAL ADDIT. FEE		OR	TOTAL ADDIT. FEE	

AMENDMENT B

	(Column 1)		(Column 2)	(Column 3)
	CLAIMS REMAINING AFTER AMENDMENT		HIGHEST NUMBER PREVIOUSLY PAID FOR	PRESENT EXTRA
Total	*	Minus	**	=
Independent	*	Minus	***	=
FIRST PRESENTATION OF MULTIPLE DEPENDENT CLAIM				☐

RATE	ADDITIONAL FEE		RATE	ADDITIONAL FEE
X$ 9=		OR	X$18=	
X40=		OR	X80=	
+135=		OR	+270=	
TOTAL ADDIT. FEE		OR	TOTAL ADDIT. FEE	

AMENDMENT C

	(Column 1)		(Column 2)	(Column 3)
	CLAIMS REMAINING AFTER AMENDMENT		HIGHEST NUMBER PREVIOUSLY PAID FOR	PRESENT EXTRA
Total	*	Minus	**	=
Independent	*	Minus	***	=
FIRST PRESENTATION OF MULTIPLE DEPENDENT CLAIM				☐

RATE	ADDITIONAL FEE		RATE	ADDITIONAL FEE
X$ 9=		OR	X$18=	
X40=		OR	X80=	
+135=		OR	+270=	
TOTAL ADDIT. FEE		OR	TOTAL ADDIT. FEE	

* If the entry in column 1 is less than the entry in column 2, write "0" in column 3.
** If the "Highest Number Previously Paid For" IN THIS SPACE is less than 20, enter "20."
***If the "Highest Number Previously Paid For" IN THIS SPACE is less than 3, enter "3."
The "Highest Number Previously Paid For" (Total or Independent) is the highest number found in the appropriate box in column 1.

UNITED STATES PATENT AND TRADEMARK OFFICE

COMMISSIONER FOR PATENTS
UNITED STATES PATENT AND TRADEMARK OFFICE
WASHINGTON, D.C. 20231
www.uspto.gov

APPLICATION NUMBER	FILING/RECEIPT DATE	FIRST NAMED APPLICANT	ATTORNEY DOCKET NUMBER
09/810,514	03/15/2001	David Chao	85160.924

CONFIRMATION NO. 6193

FORMALITIES LETTER

OC000000005996675

The Hecker Law Group
1925 Century Park East, Suite # 2300
Los Angeles, CA 90067

Date Mailed: 04/23/2001

NOTICE TO FILE MISSING PARTS OF NONPROVISIONAL APPLICATION

FILED UNDER 37 CFR 1.53(b)

Filing Date Granted

An application number and filing date have been accorded to this application. The item(s) indicated below, however, are missing. Applicant is given **TWO MONTHS** from the date of this Notice within which to file all required items and pay any fees required below to avoid abandonment. Extensions of time may be obtained by filing a petition accompanied by the extension fee under the provisions of 37 CFR 1.136(a).

- The statutory basic filing fee is missing.
  Applicant must submit $ **710** *to complete the basic filing fee and/or file a small entity statement claiming such status (37 CFR 1.27).*
- Total additional claim fee(s) for this application is $952.
  - **$792** for **44** total claims over 20.
  - **$160** for **2** independent claims over 3 .
- The oath or declaration is missing.
  A properly signed oath or declaration in compliance with 37 CFR 1.63, identifying the application by the above Application Number and Filing Date, is required.
- To avoid abandonment, a late filing fee or oath or declaration surcharge as set forth in 37 CFR 1.16(e) of $130 for a non-small entity, must be submitted with the missing items identified in this letter.
- **The balance due by applicant is $ 1792.**

A copy of this notice MUST be returned with the reply.

H. T

Customer Service Center
Initial Patent Examination Division (703) 308-1202
PART 3 - OFFICE COPY

H-A

0300

UNITED STATES DEPARTMENT OF COMMERCE
Patent and Trademark Office

ASSISTANT SECRETARY AND COMMISSIONER
OF PATENTS AND TRADEMARKS
Washington, D.C. 20231

CHANGE OF ADDRESS/POWER OF ATTORNEY

FILE LOCATION 03C0 SERIAL NUMBER 09810514 PATENT NUMBER

THE CORRESPONDENCE ADDRESS HAS BEEN CHANGED TO CUSTOMER # 22804

THE PRACTITIONERS OF RECORD HAVE BEEN CHANGED TO CUSTOMER # 22804

THE FEE ADDRESS HAS BEEN CHANGED TO CUSTOMER # 22804.

ON 04/24/01 THE ADDRESS OF RECORD FOR CUSTOMER NUMBER 22804 IS:

THE HECKER LAW GROUP
1925 CENTURY PARK EAST
SUITE 2300
LOS ANGELES CA 90067

AND THE PRACTITIONERS OF RECORD FOR CUSTOMER NUMBER 22804 ARE:

31023 45677 45907 47475

RECEIVED
MAY 17 2001
OIPE/JCWS

PTO INSTRUCTIONS: PLEASE TAKE THE FOLLOWING ACTION WHEN THE CORRESPONDENCE ADDRESS HAS BEEN CHANGED TO CUSTOMER NUMBER: RECORD, ON THE NEXT AVAILABLE CONTENTS LINE OF THE FILE JACKET, 'ADDRESS CHANGE TO CUSTOMER NUMBER'. LINE THROUGH THE OLD ADDRESS ON THE FILE JACKET LABEL AND ENTER ONLY THE 'CUSTOMER NUMBER' AS THE NEW ADDRESS. FILE THIS LETTER IN THE FILE JACKET. WHEN ABOVE CHANGES ARE ONLY TO FEE ADDRESS AND/OR PRACTITIONERS OF RECORD, FILE LETTER IN THE FILE JACKET.
THIS FILE IS ASSIGNED TO GAU 0000.

OIPE
JUN 04 2001
PATENT & TRADEMARK OFFICE

Sector 1
#13

Please type a plus sign (+) inside this box → [+]

PTO/SB/21 (08-00)
Approved for use through 10/31/2002. OMB 0651-0031
U.S. Patent and Trademark Office: U.S. DEPARTMENT OF COMMERCE
Under the Paperwork Reduction Act of 1995, no persons are required to respond to a collection of information unless it displays a valid OMB control number.

TRANSMITTAL FORM

(to be used for all correspondence after initial filing)

Application Number	09/810,514
Filing Date	March 15, 2001
First Named Inventor	David Chao
Group Art Unit	2173
Examiner Name	Unassigned
Total Number of Pages in This Submission: 8	Attorney Docket Number: 85160.924/T00071

ENCLOSURES *(check all that apply)*

- [x] Fee Transmittal Form
  - [x] Fee Attached
- [ ] Amendment / Reply
  - [ ] After Final
  - [ ] Affidavits/declaration(s)
- [ ] Extension of Time Request
- [ ] Express Abandonment Request
- [ ] Information Disclosure Statement
- [ ] Certified Copy of Priority Document(s)
- [x] Response to Missing Parts/ Incomplete Application
  - [ ] Response to Missing Parts under 37 CFR 1.52 or 1.53
- [ ] Assignment Papers *(for an Application)*
- [ ] Drawing(s)
- [ ] Licensing-related Papers
- [ ] Petition
- [ ] Petition to Convert to a Provisional Application
- [ ] Power of Attorney, Revocation Change of Correspondence Address
- [ ] Terminal Disclaimer
- [ ] Request for Refund
- [ ] CD, Number of CD(s) _____
- [ ] After Allowance Communication to Group
- [ ] Appeal Communication to Board of Appeals and Interferences
- [ ] Appeal Communication to Group *(Appeal Notice, Brief, Reply Brief)*
- [ ] Proprietary Information
- [ ] Status Letter
- [x] Other Enclosure(s) *(please identify below)*:
  - -Signed Declaration/POA
  - -Return Receipt postcard
  - -Check for 1,792.00
  - -Copy of missing parts notice

Remarks

SIGNATURE OF APPLICANT, ATTORNEY, OR AGENT

Firm or Individual name	The Hecker Law Group By: Gary A. Hecker
Signature	
Date	May 29, 2001

CERTIFICATE OF MAILING

I hereby certify that this correspondence is being deposited with the United States Postal Service with sufficient postage as first class mail in an envelope addressed to: Commissioner for Patents, Washington, DC 20231 on this date: 05/29/2001

Typed or printed name	Deanna E. Blizzard		
Signature	DBlizzard	Date	May 29, 2001

Burden Hour Statement: This form is estimated to take 0.2 hours to complete. Time will vary depending upon the needs of the individual case. Any comments on the amount of time you are required to complete this form should be sent to the Chief Information Officer, U.S. Patent and Trademark Office, Washington, DC 20231. DO NOT SEND FEES OR COMPLETED FORMS TO THIS ADDRESS. SEND TO: Assistant Commissioner for Patents, Washington, DC 20231.

OIPE
JUN 04 2001
PATENT & TRADEMARK OFFICE

PTO/SB/17 (11-00)
Approved for use through 10/31/2002. OMB 0651-0032
U.S. Patent and Trademark Office; U.S. DEPARTMENT OF COMMERCE
Under the Paperwork Reduction Act of 1995, no persons are required to respond to a collection of information unless it displays a valid OMB control number.

FEE TRANSMITTAL for FY 2001

Patent fees are subject to annual revision.

TOTAL AMOUNT OF PAYMENT ($) 1792.00

Complete if Known	
Application Number	09/810,514
Filing Date	March 15, 2001
First Named Inventor	David CHAO
Examiner Name	Unassigned
Group Art Unit	2173
Attorney Docket No.	85160.924/T00071

METHOD OF PAYMENT

1. ☐ The Commissioner is hereby authorized to charge indicated fees and credit any overpayments to:
   Deposit Account Number:
   Deposit Account Name:
   ☐ Charge Any Additional Fee Required Under 37 CFR 1.16 and 1.17
   ☐ Applicant claims small entity status. See 37 CFR 1.27

2. ☑ **Payment Enclosed:**
   ☑ Check ☐ Credit card ☐ Money Order ☐ Other

FEE CALCULATION

1. BASIC FILING FEE

Large Entity Fee Code	Large Entity Fee ($)	Small Entity Fee Code	Small Entity Fee ($)	Fee Description	Fee Paid
101	710	201	355	Utility filing fee	710.00
106	320	206	160	Design filing fee	
107	490	207	245	Plant filing fee	
108	710	208	355	Reissue filing fee	
114	150	214	75	Provisional filing fee	

SUBTOTAL (1) ($) 710.00

2. EXTRA CLAIM FEES

		Extra Claims		Fee from below	Fee Paid
Total Claims	64	-20** =	44	X 18.00	= 792.00
Independent Claims	5	- 3** =	4	X 80.00	= 160.00
Multiple Dependent					=

Large Entity Fee Code	Large Entity Fee ($)	Small Entity Fee Code	Small Entity Fee ($)	Fee Description
103	18	203	9	Claims in excess of 20
102	80	202	40	Independent claims in excess of 3
104	270	204	135	Multiple dependent claim, if not paid
109	80	209	40	** Reissue independent claims over original patent
110	18	210	9	** Reissue claims in excess of 20 and over original patent

SUBTOTAL (2) ($) 952.00

**or number previously paid, if greater; For Reissues, see above

FEE CALCULATION (continued)

3. ADDITIONAL FEES

Large Entity Fee Code	Large Entity Fee ($)	Small Entity Fee Code	Small Entity Fee ($)	Fee Description	Fee Paid
105	130	205	65	Surcharge - late filing fee or oath	130.00
127	50	227	25	Surcharge - late provisional filing fee or cover sheet	
139	130	139	130	Non-English specification	
147	2,520	147	2,520	For filing a request for *ex parte* reexamination	
112	920*	112	920*	Requesting publication of SIR prior to Examiner action	
113	1,840*	113	1,840*	Requesting publication of SIR after Examiner action	
115	110	215	55	Extension for reply within first month	
116	390	216	195	Extension for reply within second month	
117	890	217	445	Extension for reply within third month	
118	1,390	218	695	Extension for reply within fourth month	
128	1,890	228	945	Extension for reply within fifth month	
119	310	219	155	Notice of Appeal	
120	310	220	155	Filing a brief in support of an appeal	
121	270	221	135	Request for oral hearing	
138	1,510	138	1,510	Petition to institute a public use proceeding	
140	110	240	55	Petition to revive - unavoidable	
141	1,240	241	620	Petition to revive - unintentional	
142	1,240	242	620	Utility issue fee (or reissue)	
143	440	243	220	Design issue fee	
144	600	244	300	Plant issue fee	
122	130	122	130	Petitions to the Commissioner	
123	50	123	50	Processing fee under 37 CFR 1.17(q)	
126	180	126	180	Submission of Information Disclosure Stmt	
581	40	581	40	Recording each patent assignment per property (times number of properties)	
146	710	246	355	Filing a submission after final rejection (37 CFR § 1.129(a))	
149	710	249	355	For each additional invention to be examined (37 CFR § 1.129(b))	
179	710	279	355	Request for Continued Examination (RCE)	
169	900	169	900	Request for expedited examination of a design application	

Other fee (specify) _____

*Reduced by Basic Filing Fee Paid

SUBTOTAL (3) ($) 130.00

SUBMITTED BY				Complete *(if applicable)*	
Name (Print/Type)	Gary A. Hecker	*Registration No. (Attorney/Agent)*	31,023	*Telephone*	(310)286-0377
Signature				*Date*	May 29, 2001

WARNING: Information on this form may become public. Credit card information should not be included on this form. Provide credit card information and authorization on PTO-2038.

Burden Hour Statement: This form is estimated to take 0.2 hours to complete. Time will vary depending upon the needs of the individual case. Any comments on the amount of time you are required to complete this form should be sent to the Chief Information Officer, U.S. Patent and Trademark Office, Washington, DC 20231. DO NOT SEND FEES OR COMPLETED FORMS TO THIS ADDRESS. SEND TO: Assistant Commissioner for Patents, Washington, DC 20231.

#4

OIPE JC171 JUN 04 2001 PATENT & TRADEMARK OFFICE

UNITED STATES PATENT AND TRADEMARK OFFICE

COMMISSIONER FOR PATENTS
UNITED STATES PATENT AND TRADEMARK OFFICE
WASHINGTON, D.C. 20231
www.uspto.gov

APPLICATION NUMBER	FILING/RECEIPT DATE	FIRST NAMED APPLICANT	ATTORNEY DOCKET NUMBER
09/810,514	03/15/2001	David Chao	85160.924

CONFIRMATION NO. 6193

FORMALITIES LETTER

OC000000005996675

The Hecker Law Group
1925 Century Park East, Suite # 2300
Los Angeles, CA 90067

Date Mailed: 04/23/2001

NOTICE TO FILE MISSING PARTS OF NONPROVISIONAL APPLICATION

FILED UNDER 37 CFR 1.53(b)

Filing Date Granted

An application number and filing date have been accorded to this application. The item(s) indicated below, however, are missing. Applicant is given **TWO MONTHS** from the date of this Notice within which to file all required items and pay any fees required below to avoid abandonment. Extensions of time may be obtained by filing a petition accompanied by the extension fee under the provisions of 37 CFR 1.136(a).

- The statutory basic filing fee is missing.
  Applicant must submit $ **710** *to complete the basic filing fee and/or file a small entity statement claiming such status (37 CFR 1.27).*
- Total additional claim fee(s) for this application is $952.
  - **$792** for **44** total claims over 20.
  - **$160** for **2** independent claims over 3 .
- The oath or declaration is missing.
  A properly signed oath or declaration in compliance with 37 CFR 1.63, identifying the application by the above Application Number and Filing Date, is required.
- To avoid abandonment, a late filing fee or oath or declaration surcharge as set forth in 37 CFR 1.16(e) of $130 for a non-small entity, must be submitted with the missing items identified in this letter.
- **The balance due by applicant is $ 1792.**

A copy of this notice MUST be returned with the reply.

H-T

Customer Service Center
Initial Patent Examination Division (703) 308-1202
PART 2 - COPY TO BE RETURNED WITH RESPONSE

06/05/2001 JADDO1 00000026 09810514
01 FC:101 710.00 OP
02 FC:102 160.00 OP
03 FC:103 792.00 OP
04 FC:105 130.00 OP

JUN 0 4 2001
PATENT & TRADEMARK OFFICE

Our Ref.: 85160.924

DECLARATION AND POWER OF ATTORNEY FOR PATENT APPLICATION

As below named inventors, We hereby declare that:

Our residence, post office addresses and citizenship are as stated below, next to our names,

We believe we are the original, first and joint inventors of the subject matter which is claimed and for which a patent is sought on the invention entitled

METHOD AND SYSTEM FOR MANAGING DISTRIBUTOR INFORMATION

the specification of which

_____ is attached hereto.
XXX was filed on March 15, 2001 as
Application Serial No.: 09/810,514
and was amended on _____
(if applicable)

We hereby state that we have reviewed and understand the contents of the above-identified specification, including the claims, as amended by any amendment referred to above. We do not know and do not believe that the same was ever known or used in the United States of America before our invention thereof, or patented or described in any printed publication in any country before our invention thereof or more than one year prior to this application, that the same was not in public use or on sale in the United States of America more than one year prior to this application, and that the invention has not been patented or made the subject of an inventor's certificate issued before the date of this application in any country foreign to the United States of America on an application filed by us or our legal representatives or assigns more than twelve months prior to this application.

We acknowledge the duty to disclose information which is material to the examination of this application in accordance with Title 37, Code of Federal Regulations, §1.56(a).

We hereby claim foreign priority benefits under Title 35, United States Code, §119, of any foreign application(s) for patent or inventor's certificate listed below and have also identified below any foreign application for patent or inventor's certificate having a filing date before that of the application on which priority is claimed:

Prior Foreign Application(s)			Priority Claimed	
(Number)	(Country)	(Day/Month/Year Filed)	Yes	No
(Number)	(Country)	(Day/Month/Year Filed)	Yes	No
(Number)	(Country)	(Day/Month/Year Filed)	Yes	No

We hereby claim the benefit under Title 35, United States Code, §120 of any United States application(s) listed below and, insofar as the subject matter of each of the claims of this application is not disclosed in the prior United States application in the manner provided by the first paragraph of Title 35, United States Code, §112, We acknowledge the duty to disclose material information as defined in Title 37, Code of Federal Regulations, §1.56(a) which occurred between the filing date of the prior application and the national or PCT international filing date of this application:

(Application Serial No.)	(Filing Date)	(Status -- patented, pending, abandoned)
(Application Serial No.)	(Filing Date)	(Status -- patented, pending, abandoned)

We hereby appoint THE HECKER LAW GROUP, a firm including: Gary A. Hecker, Reg. No. 31,023; Angelo Gaz, Reg. No. 45,907; Obi Iloputaife, Reg. No. 45677, with offices located at 1925 Century Park East, Suite 2300, Los Angeles, California 90067, telephone (310) 286-0377, as our attorneys with full power of substitution and revocation, to prosecute this application and to transact all business in the Patent and Trademark Office connected herewith.

We hereby declare that all statements made herein of our own knowledge are true and that all statements made on information and belief are believed to be true; and further that these statements were made with the knowledge that willful false statements and the like so made are punishable by fine or imprisonment, or both, under §1001 of Title 18 of the United States Code and that such willful false statements may jeopardize the validity of the application or any patent issued thereon.

Full Name of first Inventor: DAVID CHAO

Inventor's Signature _____ Date 3/29/01

Residence Austin, TX (City, State) Citizenship USA (Country)

Post Office Address 6605 Rain Creek Pkwy
Austin, TX ~~7859~~ 78759

Full Name of second Inventor: BRIAN BLOUNT

Inventor's Signature _____ Date 5/15/01

Residence Austin, TX (City, State) Citizenship USA (Country)

Post Office Address 1506 B Pease Rd
Austin TX 78703

Full Name of Third Inventor: CHARLES ERICKSON

Inventor's Signature _____ Date 4-19-2001

Residence Cedar Park, TX (City, State) Citizenship USA (Country)

Post Office Address 1509 Spiderlily View

Full Name of Third Inventor: SHARI GHARAVY

Inventor's Signature _____ Date 3/30/2001

Residence Austin, TX (City, State) Citizenship CANADA (Country)

Post Office Address 11266 Taylor Draper Ln #1723
Austin, TX 78759

Full Name of Third Inventor: CHENG ZHOU

Inventor's Signature _____ Date 4/22/2001

Residence Austin, TX (City, State) Citizenship USA (Country)

Post Office Address 2809 Grimes Ranch Rd.
Austin, TX 78732

Full Name of Third Inventor: JOSHUA TOUB

Inventor's Signature _____ Date 4/19/2001

Residence AUSTIN, TX (City, State) Citizenship USA (Country)

Post Office Address 11932 Dorsett Rd
AUSTIN, TX 78727

CERTIFICATE OF MAILING
This is to certify that this correspondence is being deposited with the United States Postal Service with sufficient postage as First Class Mail in an Envelope addressed to: Assistant Commissioner for Patents, Washington, D.C. 20231 on:
May 29, 2001
D R Gazzard 5-29-01
Signature Date

OIPE JC175
AUG 23 2001
PATENT & TRADEMARK OFFICE

2173
#4
BD
11-27-01

Please type a plus sign (+) inside this box → [+]

PTO/SB/21 (08-00)
Approved for use through 10/31/2002. OMB 0651-0031
U.S. Patent and Trademark Office: U.S. DEPARTMENT OF COMMERCE
Under the Paperwork Reduction Act of 1995, no persons are required to respond to a collection of information unless it displays a valid OMB control number.

TRANSMITTAL FORM

(to be used for all correspondence after initial filing)

Application Number	09/810,514
Filing Date	03/15/2001
First Named Inventor	CHAO et al.
Group Art Unit	2173
Examiner Name	
Total Number of Pages in This Submission: 13	Attorney Docket Number: 85160.924/T00[illegible]

RECEIVED
AUG 27 2001
Technology Center 2100

ENCLOSURES *(check all that apply)*

- [ ] Fee Transmittal Form
  - [ ] Fee Attached
- [ ] Amendment / Reply
  - [ ] After Final
  - [ ] Affidavits/declaration(s)
- [ ] Extension of Time Request
- [ ] Express Abandonment Request
- [x] Information Disclosure Statement
- [ ] Certified Copy of Priority Document(s)
- [ ] Response to Missing Parts/ Incomplete Application
  - [ ] Response to Missing Parts under 37 CFR 1.52 or 1.53
- [ ] Assignment Papers *(for an Application)*
- [ ] Drawing(s)
- [ ] Licensing-related Papers
- [ ] Petition
- [ ] Petition to Convert to a Provisional Application
- [ ] Power of Attorney, Revocation Change of Correspondence Address
- [ ] Terminal Disclaimer
- [ ] Request for Refund
- [ ] CD, Number of CD(s) _____
- [ ] After Allowance Communication to Group
- [ ] Appeal Communication to Board of Appeals and Interferences
- [ ] Appeal Communication to Group *(Appeal Notice, Brief, Reply Brief)*
- [ ] Proprietary Information
- [ ] Status Letter
- [x] Other Enclosure(s) *(please identify below)*:

Form PTO/SB/08; Copy of cited references; Return postcard

Remarks

SIGNATURE OF APPLICANT, ATTORNEY, OR AGENT

Firm or Individual name	Gary A. Hecker, Esq. THE HECKER LAW GROUP
Signature	
Date	Aug. 21, 2001

CERTIFICATE OF MAILING

I hereby certify that this correspondence is being deposited with the United States Postal Service with sufficient postage as first class mail in an envelope addressed to: Commissioner for Patents, Washington, DC 20231 on this date: Aug. 21, 2001

Typed or printed name	Nancy V. McElrath		
Signature	Nancy V. McElrath	Date	8-21-01

Burden Hour Statement: This form is estimated to take 0.2 hours to complete. Time will vary depending upon the needs of the individual case. Any comments on the amount of time you are required to complete this form should be sent to the Chief Information Officer, U.S. Patent and Trademark Office, Washington, DC 20231. DO NOT SEND FEES OR COMPLETED FORMS TO THIS ADDRESS. SEND TO: Assistant Commissioner for Patents, Washington, DC 20231.

OIPE JC17
AUG 23 2001
PATENT & TRADEMARK OFFICE

85160.924/T00071

IN THE UNITED STATES PATENT AND TRADEMARK OFFICE

In re the Application of	)	
	)	
CHAO et al.	)	
	)	
Serial No: 09/810,514	)	Examiner: Unassigned
	)	
Filed: March 15, 2001	)	
	)	Art Unit: 2173
For: METHOD AND SYSTEM FOR MANAGING DISTRIBUTOR INFORMATION	)	

RECEIVED
AUG 27 2001
Technology Center 2100

INFORMATION DISCLOSURE STATEMENT

Assistant Commissioner for Patents
Box IDS
Washington, D.C. 20231

Sir:

Pursuant to 37 C.F.R. § 1.56 and § 1.98, Applicant hereby submits the following art in connection with the above-referenced patent application for "METHOD AND SYSTEM FOR MANAGING DISTRIBUTOR INFORMATION."

U.S. Patent No.	Inventor(s)	Issue Date
5,369,732	Lynch et al.	11-29-1994
5,515,524	Lynch et al.	05-07-1996
5,708,798	Lynch et al.	01-13-1998
5,825,651	Gupta et al.	10-20-1998

5,878,400	Carter, III	03-02-1999
6,002,854	Lynch et al.	12-14-1999
6,157,922	Vaughan	12-05-2000

U.S. Appl. No.	Inventor(s)	Filing Date
08/780,600	Shah et al.	01-08-1997
08/931,878	Gupta	09-17-1997
09/081,857	Koppelman et al.	05-19-1998
09/163,752	Waugh et al.	09-30-1998
09/165,656	Gupta	10-03-1998
09/253,427	Carter, III	02-19-1999
09/413,963	Lynch et al.	03-10-1997
09/730,481	Vaughan	12-04-2000
09/809,991	Chao et al.	03-15-2001
09/810,012	Chao et al.	03-15-2001
09/810,515	Zhou et al.	03-15-2001
09/810,519	Zhou et al.	03-15-2001
09/896,140	Gharavy	06-29-2001
09/896,144	Gharavy	06-29-2001

RECEIVED

AUG 2 7 2001

Technology Center 2100

Publications:

1. NORMAN WALSH, XSL The Extensible Style Language [online]. Web Techniques, January 1999 [retrieved on 2001-02-11]. Retrieved from the Internet: <URL: http://www.webtechniques.com/archives/1990/01/walsh/>.

2. SELENA SOL, What is a Markup Language [online]. Web Developer's Virtual Library, March 8, 1999 [retrieved on 2001-04-17]. Retrieved from the Internet: <URL: http://wdvl.internet.com/Authoring/Languages/XML/Tutorials/Intro/what_is_markup_language>.

3. SELENA SOL, What is XML [online]. Web Developer's Virtual Library, March 8, 1999 [retrieved on 2001-02-11]. Retrieved from the Internet: <URL: http://wdvl.internet.com/Authoring/Languages/XML/Tutorials/Intro/what_is_xml.html>.

4. SELENA SOL, The Well-Formed Document [online]. Web Developer's Virtual Library, March 29, 1999 [retrieved on 2001-02-11]. Retrieved from the Internet: <URL: http://wdvl.internet.com/Authoring/Languages/XML/Tutorials/Intro/well_formed_doc.html>.

5. SELENA SOL, Introducing the Valid XML Document and the DTD [online]. Web Developer's Virtual Library, May 3, 1999 [retrieved on

2001-02-11]. Retrieved from the Internet: <URL: http://wdvl.internet.com/Authoring/Languages/XML/Tutorials/Intro/dtd_intro.html>.

6. XSLT, Xpath and XSL Formatting Objects [online]. Web Developer's Virtual Library [retrieved on 2001-02-11]. Retrieved from the Internet: <URL: http://wdvl.internet.com/Authoring/Languages/XSL/>.

7. ADAM RIFKIN, A Look at XML [online], [retrieved on 2001-02-11]. Retrieved from the Internet: <URL: http://www.webdeveloper.com/xml/xml_a_look_at_xml.html>.

8. A Flexible Commission System to Improve Your Agency Relationships, CSC: Financial Services – S3+ Contracts and Commissions [online], [retrieved on 2001-08-15]. Retrieved from the Internet: <URL: http://www.csc-fs.com/MARKETS/detail/pc_s3contracts.asp>.

9. PolicyLink Commission System, CSC: Financial Services [online], [retrieved on 2001-08-15]. Retrieved from the Internet: <URL: http://www.csc-fs.com/MARKETS/detail/la_policylinkcomm.asp>.

10. Pictorial, Inc. – Insurance and Financial Services Training [online], Dec. 2, 2000 [retrieved on 2001-08-16]. Retrieved from the Internet: <URL: http://www.pictorial.com/>.

11. What is AppointPAK? [online], [retrieved on 2001-08-16]. Retrieved from the Internet: <URL: http://www.bisys-licensing.com/apptpak/whatis.htm>.

12. AppointPAK Features & Benefits [online], [retrieved on 2001-08-16]. Retrieved from the Internet: <URL: http://www.bisys-licensing.com/apptpak/features.htm#buried>.

13. What is e-PAL? [online], [retrieved on 2001-08-16]. Retrieved from the Internet: <URL: http://www.bisys-licensing.com/palvt/whatis.html>.

14. e-PAL Features & Benefits [online], [retrieved on 2001-08-16]. Retrieved from the Internet: <URL: http://www.bisys-licensing.com/palvt/features.html#source>.

15. Nine e-PAL Services, Features and Benefits [online], [retrieved on 2001-08-16]. Retrieved from the Internet: <URL: http://www.bisys-licensing.com/palvt/serv.html#adjust>.

16. HRMS Enterprise Applications, Human Resources Management, PeopleSoft, Inc. [online], [retrieved on 2001-08-16]. Retrieved from the Internet: <URL: http://www.peoplesoft.com/en/us/products/applications/hrm/HRMS/hrmsea/index.html>.

17. HRMS Collaborative Applications, Human Resources Management, PeopleSoft, Inc. [online], [retrieved on 2001-08-16]. Retrieved from

the Internet: <URL: http://www.peoplesoft.com/en/us/products/applications/hrm/HRMS/hrmsca/index.html>.

18. Financial Planning Made Easy, American Express, Financial Services [online], [retrieved on 2001-08-16]. Retrieved from the Internet: <URL: http://finance.americanexpress.com/sif/cda/page/0,1641,4588,00.asp>.

19. Advice and Planning, American Express, Financial Services [online], [retrieved on 2001-08-16]. Retrieved from the Internet: <URL: http://finance.americanexpress.com/sif/cda/page/0,1641,7569,00.asp>.

20. Why ContractMaker, And How Does It Work?, Legal Contracts, Digital Contracts, Inc., [online], [retrieved on 2001-08-08]. Retrieved from the Internet: <URL: http://www.digicontracts.com/info/whyhow.html>.

21. Frequently Asked Questions, Digital Contracts, Inc., [online], [retrieved on 2001-08-16]. Retrieved from the Internet: <URL: http://www.digicontracts.com/kits/faqs.html>.

Applicant requests that these references be included with the references cited in this patent application and that they be printed in any patent that may issue from this patent application.

Pursuant to 37 C.F.R. § 1.97(b)(3), no fee is required. A copy of each of the references is enclosed pursuant to 37 C.F.R. § 1.98(a).

The Commissioner is hereby authorized to charge any fees associated with this communication or credit any overpayment to The Hecker Law Group, Deposit Account No. 08-1520.

Respectfully submitted,

THE HECKER LAW GROUP

Date: Aug. 21, 2001

Gary A. Hecker
Reg. No. 31,023

THE HECKER LAW GROUP
1925 Century Park East
Suite 2300
Los Angeles, CA 90067
(310) 286-0377

CERTIFICATE OF MAILING

This is to certify that this correspondence is being deposited with the United States Postal Service with sufficient postage as FIRST CLASS MAIL in an envelope addressed to: Box IDS, Commissioner for Patents, Washington, D.C. 20231 on Aug. 21, 2001.

Nancy V. McElrath 8-21-01

Signature *Date*

OIPE JC176 AUG 23 2001 PATENT & TRADEMARK OFFICE

Please type a plus sign (+) inside the box → [+]

PTO/SB/08 (10-96)
Approved for use through 10/31/99. OMB 0651-0031
Patent and Trademark Office: U.S. DEPARTMENT OF COMMERCE
Under the Paperwork Reduction Act of 1995, no persons are required to respond to a collection of information unless it contains a valid OMB control number.

Substitute for form 1449A/PTO

INFORMATION DISCLOSURE STATEMENT BY APPLICANT

(Use as many sheets if necessary)

Sheet 1 of 5

Complete if Known	
Application Number	09/810,514
Filing Date	03/15/2001
First Named Inventor	CHAO et al.
Group Art Unit	2173
Examiner Name	
Attorney Docket Number	85160.924/T00071

U.S. PATENT DOCUMENTS

Examiner Initials	Cite No.[1]	U.S. Patent Document Number	Kind Code[2] (If Known)	Name Of Patentee Or Applicant Of Cited Document	Date of Publication of Cited Document MM-DD-YYYY	Pages, Columns, Lines, Where Relevant Passages Or Relevant Figures Appear
		5,369,732		Lynch et al.	11-29-1194	
		5,515,524		Lynch et al.	05-07-1996	
		5,708,798		Lynch et al.	01-13-1998	
		5,825,651		Gupta et al.	10-20-1998	
		5,878,400		Carter, III	03-02-1999	
		6,002,854		Lynch et al.	12-14-1999	
		6,157,922		Vaughan	12-05-2000	
		08/780,600		Shah et al.		
		08/931,878		Gupta		
		09/081,857		Koppelman et al.		
		09/163,752		Waugh et al.		
		09/165,656		Gupta		
		09/253,427		Carter, III		
		09/413,963		Lynch et al.		
		09/730,481		Vaughan		
		09/809,991		Chao et al.		
		09/810,012		Chao et al.		
		09/810,515		Zhou et al.		

FOREIGN PATENT DOCUMENTS

Examiner Initials	Cite No.[1]	Foreign Patent Document Office[3]	Number	Kind Code[4] (If Known)	Name Of Patentee Or Applicant Of Cited Document	Date of Publication of Cited Document MM-DD-YYYY	Pages, Columns, Lines, Where Relevant Passages Or Relevant Figures Appear	T[5]

OTHER PRIOR ART – NON PATENT LITERATURE DOCUMENTS

Examiner Initials	Cite No.[1]	Include name of the author (in CAPITAL LETTERS), title of the article (when appropriate), title of the item (book, magazine, journal, serial, symposium, catalog, etc.), date, page(s), volume-issue number(s), publisher, city and/or country where published.	T[5]

Examiner Signature		Date Considered	

[1] EXAMINER: Initial if citation considered, whether or not citation is in conformance with MPEP § 609; Draw line through citation if not in conformance and not considered. Include copy of this form with next communication to the applicant.

Please type a plus sign (+) inside this box → [+]

PTO/SB/08 (10-96)
Approved for use through 10/31/99. OMB 0651-0031
Patent and Trademark Office: U.S. DEPARTMENT OF COMMERCE
Under the Paperwork Reduction Act of 1995, no persons are required to respond to a collection of information unless it contains a valid OMB control number.

OIPE JC16 AUG 23 2001 PATENT & TRADEMARK OFFICE

Substitute for form 1449A/PTO

INFORMATION DISCLOSURE STATEMENT BY APPLICANT

(Use as many sheets if necessary)

Sheet	2	of	5

Complete if Known	
Application Number	09/810,514
Filing Date	03/15/2001
First Named Inventor	CHAO et al.
Group Art Unit	2173
Examiner Name	
Attorney Docket Number	85160.924/T00071

U.S. PATENT DOCUMENTS

Examiner Initials	Cite No.[1]	U.S. Patent Document Number	Kind Code[2] (If Known)	Name Of Patentee Or Applicant Of Cited Document	Date of Publication of Cited Document MM-DD-YYYY	Pages, Columns, Lines, Where Relevant Passages Or Relevant Figures Appear
		09/810,519		Zhou et al.		
		09/896,140		Gharavy		
		09/896,144		Gharavy		

FOREIGN PATENT DOCUMENTS

Examiner Initials	Cite No.[1]	Foreign Patent Document Office[3]	Number	Kind Code[4] (If Known)	Name Of Patentee Or Applicant Of Cited Document	Date of Publication of Cited Document MM-DD-YYYY	Pages, Columns, Lines, Where Relevant Passages Or Relevant Figures Appear	T[5]

OTHER PRIOR ART - NON PATENT LITERATURE DOCUMENTS

Examiner Initials	Cite No.[1]	Include name of the author (in CAPITAL LETTERS), title of the article (when appropriate), title of the item (book, magazine, journal, serial, symposium, catalog, etc.), date, page(s), volume-issue number(s), publisher, city and/or country where published.	T[2]
		NORMAN WALSH, XSL The Extensible Style Language [online]. Web Techniques, January 1999 [retrieved on 2001-02-11]. Retrieved from the Internet: <URL: http://www.webtechniques.com/archives/1990/01/walsh/>	
		SELENA SOL, What is a Markup Language [online]. Web Developer's Virtual Library, March 8, 1999 [retrieved on 2001-04-17]. Retrieved from the Internet: <URL: http://wdvl.internet.com/Authoring/Languages/XML/Tutorials/Intro/what_is_markup_language>	
		SELENA SOL, What is XML [online]. Web Developer's Virtual Library, March 8, 1999 [retrieved on 2001-02-11]. Retrieved from the Internet: <URL: http://wdvl.internet.com/Authoring/Languages/XML/Tutorials/Intro/what_is_xml.html>	
		SELENA SOL, The Well-Formed Document [online]. Web Developer's Virtual Library, March 29, 1999 [retrieved on 2001-02-11]. Retrieved from the Internet: <URL: http://wdvl.internet.com/Authoring/Languages/XML/Tutorials/Intro/well_formed_doc.html>	

Examiner Signature		Date Considered	

[1]EXAMINER: Initial if citation considered, whether or not citation is in conformance with MPEP § 609; Draw line through citation if not in conformance and not considered. Include copy of this form with next communication to the applicant.

Please type a plus sign (+) inside this box → [+]

PTO/SB/08 (10-96)
Approved for use through 10/31/99. OMB 0651-0031
Patent and Trademark Office: U.S. DEPARTMENT OF COMMERCE
Under the Paperwork Reduction Act of 1995, no persons are required to respond to a collection of information unless it contains a valid OMB control number.

OIPE
AUG 23 2001
PATENT & TRADEMARK OFFICE
JC175

Substitute for form 1449A/PTO

INFORMATION DISCLOSURE STATEMENT BY APPLICANT

(Use as many sheets if necessary)

Sheet 3 of 5

Complete if Known	
Application Number	09/810,514
Filing Date	03/15/2001
First Named Inventor	CHAO et al.
Group Art Unit	2173
Examiner Name	
Attorney Docket Number	85160.924/T00071

U.S. PATENT DOCUMENTS

Examiner Initials	Cite No.[1]	U.S. Patent Document: Number	Kind Code[2] (If Known)	Name Of Patentee Or Applicant Of Cited Document	Date of Publication of Cited Document MM-DD-YYYY	Pages, Columns, Lines, Where Relevant Passages Or Relevant Figures Appear

FOREIGN PATENT DOCUMENTS

Examiner Initials	Cite No.[1]	Foreign Patent Document: Office[3]	Number	Kind Code[4] (If Known)	Name Of Patentee Or Applicant Of Cited Document	Date of Publication of Cited Document MM-DD-YYYY	Pages, Columns, Lines, Where Relevant Passages Or Relevant Figures Appear	T[5]

OTHER PRIOR ART – NON PATENT LITERATURE DOCUMENTS

Examiner Initials	Cite No.[1]	Include name of the author (in CAPITAL LETTERS), title of the article (when appropriate), title of the item (book, magazine, journal, serial, symposium, catalog, etc.), date, page(s), volume-issue number(s), publisher, city and/or country where published.	T[2]
		SELENA SOL, Introducing the Valid XML Document and the DTD [online]. Web Developer's Virtual Library, May 3, 1999 [retrieved on 2001-02-11]. Retrieved from the Internet: <URL: http://wdvl.internet.com/Authoring/Languages/XML/Tutorials/Intro/dtd_intro.html>	
		XSLT, Xpath and XSL Formatting Objects [online]. Web Developer's Virtual Library [retrieved on 2001-02-11]. Retrieved from the Internet: <URL: http://wdvl.internet.com/Authoring/Languages/XSL/>	
		ADAM RIFKIN, A Look at XML [online], [retrieved on 2001-02-11]. Retrieved from the Internet: <URL: http://www.webdeveloper.com/xml/xml_a_look_at_xml.html>	
		A Flexible Commission System to Improve Your Agency Relationships, CSC: Financial Services – S3+ Contracts and Commissions [online], [retrieved on 2001-08-15]. Retrieved from the Internet: <URL: http://www.csc-fs.com/MARKETS/detail/pc_s3contracts.asp>	
		PolicyLink Commission System, CSC: Financial Services [online], [retrieved on 2001-08-15]. Retrieved from the Internet: <URL: http://www.csc-fs.com/MARKETS/detail/la_policylinkcomm.asp>	
		Pictorial, Inc. – Insurance and Financial Services Training [online], Dec. 2, 2000 [retrieved on 2001-08-16]. Retrieved from the Internet: <URL: http://www.pictorial.com/>	

Examiner Signature		Date Considered	

[1]EXAMINER: Initial if citation considered, whether or not citation is in conformance with MPEP § 609; Draw line through citation if not in conformance and not considered. Include copy of this form with next communication to the applicant.

Please type a plus sign (+) inside this box → [+]

PTO/SB/08 (10-96)

Approved for use through 10/31/99. OMB 0651-0031
Patent and Trademark Office: U.S. DEPARTMENT OF COMMERCE
Under the Paperwork Reduction Act of 1995, no persons are required to respond to a collection of information unless it contains a valid OMB control number.

OIPE JC14
AUG 23 2001
PATENT & TRADEMARK OFFICE

Substitute for form 1449A/PTO

INFORMATION DISCLOSURE STATEMENT BY APPLICANT

(Use as many sheets if necessary)

Sheet 4 of 5

Complete if Known	
Application Number	09/810,514
Filing Date	03/15/2001
First Named Inventor	CHAO et al.
Group Art Unit	2173
Examiner Name	
Attorney Docket Number	85160.924/T00071

U.S. PATENT DOCUMENTS

Examiner Initials	Cite No.[1]	U.S. Patent Document Number	Kind Code[2] (If Known)	Name Of Patentee Or Applicant Of Cited Document	Date of Publication of Cited Document MM-DD-YYYY	Pages, Columns, Lines, Where Relevant Passages Or Relevant Figures Appear

FOREIGN PATENT DOCUMENTS

Examiner Initials	Cite No.[1]	Foreign Patent Document Office[3]	Number	Kind Code[4] (If Known)	Name Of Patentee Or Applicant Of Cited Document	Date of Publication of Cited Document MM-DD-YYYY	Pages, Columns, Lines, Where Relevant Passages Or Relevant Figures Appear	T[5]

OTHER PRIOR ART – NON PATENT LITERATURE DOCUMENTS

Examiner Initials	Cite No.[1]	Include name of the author (in CAPITAL LETTERS), title of the article (when appropriate), title of the item (book, magazine, journal, serial, symposium, catalog, etc.), date, page(s), volume-issue number(s), publisher, city and/or country where published.	T[2]
		What is AppointPAK? [online], [retrieved on 2001-08-16]. Retrieved from the Internet: <URL: http://www.bisys-licensing.com/apptpak/whatis.htm>	
		AppointPAK Features & Benefits [online], [retrieved on 2001-08-16]. Retrieved from the Internet: <URL: http://www.bisys-licensing.com/apptpak/features.htm#buried>	
		What is e-PAL? [online], [retrieved on 2001-08-16]. Retrieved from the Internet: <URL: http://www.bisys-licensing.com/palvt/whatis.html>	
		e-PAL Features & Benefits [online], [retrieved on 2001-08-16]. Retrieved from the Internet: <URL: http://www.bisys-licensing.com/palvt/features.htm#source>	
		Nine e-PAL Services, Features and Benefits [online], [retrieved on 2001-08-16]. Retrieved from the Internet: <URL: http://www.bisys-licensing.com/palvt/serv.html#adjust>	
		HRMS Enterprise Applications, Human Resources Management, PeopleSoft, Inc. [online], [retrieved on 2001-08-16]. Retrieved from the Internet: <URL: http://www.peoplesoft.com/en/us/products/applications/hrm/HRMS/hrmsea/index.html>	
		HRMS Collaborative Applications, Human Resources Management, PeopleSoft, Inc. [online], [retrieved on 2001-08-16]. Retrieved from the Internet: <URL: http://www.peoplesoft.com/en/us/products/applications/hrm/HRMS/hrmsca/index.html>	

Examiner Signature		Date Considered	

[1]EXAMINER: Initial if citation considered, whether or not citation is in conformance with MPEP § 609; Draw line through citation if not in conformance and not considered. Include copy of this form with next communication to the applicant.

Please type a plus sign (+) inside this box → [+]

PTO/SB/08 (10-96)
Approved for use through 10/31/99. OMB 0651-0031
Patent and Trademark Office: U.S. DEPARTMENT OF COMMERCE
Under the Paperwork Reduction Act of 1995, no persons are required to respond to a collection of information unless it contains a valid OMB control number.

OIPE JC176 AUG 23 2001 PATENT & TRADEMARK OFFICE

RECEIVED AUG 27 2001 Technology Center 2100

Substitute for form 1449A/PTO

INFORMATION DISCLOSURE STATEMENT BY APPLICANT

(Use as many sheets if necessary)

Sheet 5 of 5

Complete if Known	
Application Number	09/810,514
Filing Date	03/15/2001
First Named Inventor	CHAO et al.
Group Art Unit	2173
Examiner Name	
Attorney Docket Number	85160.924/T00071

U.S. PATENT DOCUMENTS

Examiner Initials	Cite No.[1]	U.S. Patent Document Number	Kind Code[2] (If Known)	Name Of Patentee Or Applicant Of Cited Document	Date of Publication of Cited Document MM-DD-YYYY	Pages, Columns, Lines, Where Relevant Passages Or Relevant Figures Appear

FOREIGN PATENT DOCUMENTS

Examiner Initials	Cite No.[1]	Foreign Patent Document Office[3]	Number	Kind Code[4] (If Known)	Name Of Patentee Or Applicant Of Cited Document	Date of Publication of Cited Document MM-DD-YYYY	Pages, Columns, Lines, Where Relevant Passages Or Relevant Figures Appear	T[5]

OTHER PRIOR ART – NON PATENT LITERATURE DOCUMENTS

Examiner Initials	Cite No.[1]	Include name of the author (in CAPITAL LETTERS), title of the article (when appropriate), title of the item (book, magazine, journal, serial, symposium, catalog, etc.), date, page(s), volume-issue number(s), publisher, city and/or country where published.	T[2]
		Financial Planning Made Easy, American Express, Financial Services [online], [retrieved on 2001-08-16]. Retrieved from the Internet: <URL: http://finance.americanexpress.com/sif/cda/page/0,1641,4588,00.asp>	
		Advice and Planning, American Express, Financial Services [online], [retrieved on 2001-08-16]. Retrieved from the Internet: <URL: http://finance.americanexpress.com/sif/cda/page/0,1641,7569,00.asp>	
		Why ContractMaker, And How Does It Work?, Legal Contracts, Digital Contracts, Inc., [online], [retrieved on 2001-08-08]. Retrieved from the Internet: <URL: http://www.digicontracts.com/info/whyhow.html>	
		Frequently Asked Questions, Digital Contracts, Inc., [online], [retrieved on 2001-08-16]. Retrieved from the Internet: <URL: http://www.digicontracts.com/kits/faqs.html>	

Examiner Signature		Date Considered	

[1]EXAMINER: Initial if citation considered, whether or not citation is in conformance with MPEP § 609; Draw line through citation if not in conformance and not considered. Include copy of this form with next communication to the applicant.

JUN 25 2002
PATENT & TRADEMARK OFFICE

2173

IN THE UNITED STATES PATENT AND TRADEMARK OFFICE

Applicant(s):	David Chao et el.		
Assignee:	Trilogy Development Group		
Title:	METHOD AND SYSTEM FOR MANAGING DISTRIBUTOR INFORMATION		
Serial No.:	09/810,514	Filing Date:	March 15, 2001
Examiner:	Unknown	Group Art Unit:	2173

RECEIVED
JUL 0 1 2002
Technology Center 2100

COMMISSIONER FOR PATENTS
Washington, D.C. 20231

POWER OF ATTORNEY BY ASSIGNEE OF ENTIRE INTEREST

Sir:

The above-identified assignee hereby revokes all powers of attorney previously given and appoints hereby the following attorney(s) and/or agent(s) to prosecute the above-identified application and to transact all business in the United States Patent and Trademark Office in connection therewith: Stephen A. Terrile (32,946), Gary W. Hamilton (31,834). Robert W. Holland (40,020), Michael R. Cannati (34,791); and Kent B. Chambers (38,893).

Please address all correspondence and telephone calls regarding this application to:

Kent B. Chambers
HAMILTON & TERRILE, LLP
P.O. Box 203518
Austin, Texas 78720
Telephone: (512) 338-9100
Facsimile: (512) 345-7225

ASSIGNEE CERTIFICATION UNDER 37 CFR 3.73(b)

The undersigned representative of the above-identified assignee certifies that the above-identified assignee is the assignee of the entire right, title and interest in the above-identified

T0071
SER. NO 09/810,514

Ex. 1002 144/597

patent application by virtue of a chain of title from the inventor(s) of the above-identified patent application to the above-identified assignee as shown below:

1. From: David Chao, Brian Blount, Charles Erickson, Shari Gharavy, Cheng Zhou, Joshua Toub To: Trilogy Development Group. The document was recorded in the Patent and Trademark Office at Reel 011858, Frame 0098, or for which a copy thereof is attached.

The undersigned (whose title is supplied below) is empowered to sign this certificate on behalf of the above-identified assignee.

Trilogy Development Group, Inc. (Assignee)

By: _____

Name: Lance A. Jones

Title: Vice-President & General Counsel

Date: 5/29/02

OIPE JC87 JUN 25 2002 PATENT & TRADEMARK OFFICE

IN THE UNITED STATES PATENT AND TRADEMARK OFFICE

Applicant(s):	David Chao et el.		
Assignee:	Trilogy Development Group		
Title:	METHOD AND SYSTEM FOR MANAGING DISTRIBUTOR INFORMATION		
Serial No.:	09/810,514	Filing Date:	March 15, 2001
Examiner:	Unknown	Group Art Unit:	2173

NOTICE OF CHANGE OF ADDRESS

RECEIVED
JUL 0 1 2002
Technology Center 2100

COMMISSIONER FOR PATENTS
Washington, D. C. 20231

Sir:

Please direct all correspondence in the above-identified patent to the undersigned at this address:

c/o HAMILTON & TERRILE, LLP
P.O. Box 203518
Austin, Texas 78720
Telephone: (512) 338-9100
Facsimile: (512) 345-7225

Respectfully submitted,

Kent B. Chambers
Attorney for Applicant(s)
Reg. No. 38,839

T00071

Coa
11-0-03
D.E.

PTO/SB/122 (09-03)
Approved for use through 11/30/2005. OMB 0651-0035
U.S. Patent and Trademark Office; U.S. DEPARTMENT OF COMMERCE
Under the Paperwork Reduction Act of 1995, no persons are required to respond to a collection of information unless it displays a valid OMB control number.

CHANGE OF CORRESPONDENCE ADDRESS
Application

Address to:
Commissioner for Patents
P.O. Box 1450
Alexandria, VA 22313-1450.

Application Number	09/810,514
Filing Date	03/15/2001
First Named Inventor	David Chao
Art Unit	2173
Examiner Name	Unknown
Attorney Docket Number	T00071

Please change the Correspondence Address for the above-identified patent application to:

☑ Customer Number : 33438

OR

☐ Firm or Individual Name					
Address					
Address					
City		State		Zip	
Country					
Telephone		Fax			

This form cannot be used to change the data associated with a Customer Number. To change the data associated with an existing Customer Number use "Request for Customer Number Data Change" (PTO/SB/124).

I am the:

☐ Applicant/Inventor

☐ Assignee of record of the entire interest.
Statement under 37 CFR 3.73(b) is enclosed. (Form PTO/SB/96).

☑ Attorney or Agent of record. Registration Number 38,839

☐ Registered practitioner named in the application transmittal letter in an application without an executed oath or declaration. See 37 CFR 1.33(a)(1). Registration Number_____.

Typed or Printed Name	Kent B. Chambers
Signature	
Date 11-3-03	Telephone 512-338-9100

NOTE: Signatures of all the inventors or assignees of record of the entire interest or their representative(s) are required. Submit multiple forms if more than one signature is required, see below*.

☐ *Total of _____ forms are submitted.

This collection of information is required by 37 CFR 1.33. The information is required to obtain or retain a benefit by the public which is to file (and by the USPTO to process) an application. Confidentiality is governed by 35 U.S.C. 122 and 37 CFR 1.14. This collection is estimated to take 3 minutes to complete, including gathering, preparing, and submitting the completed application form to the USPTO. Time will vary depending upon the individual case. Any comments on the amount of time you require to complete this form and/or suggestions for reducing this burden, should be sent to the Chief Information Officer, U.S. Patent and Trademark Office, U.S. Department of Commerce, P.O. Box 1450, Alexandria, VA 22313-1450. DO NOT SEND FEES OR COMPLETED FORMS TO THIS ADDRESS. **SEND TO: Commissioner for Patents, P.O. Box 1450, Alexandria, VA 22313-1450.**

If you need assistance in completing the form, call 1-800-PTO-9199 and select option 2.

RECEIVED
CENTRAL FAX CENTER
NOV 0 3 2003

OFFICIAL

UNITED STATES PATENT AND TRADEMARK OFFICE

UNITED STATES DEPARTMENT OF COMMERCE
United States Patent and Trademark Office
Address: COMMISSIONER FOR PATENTS
P.O. Box 1450
Alexandria, Virginia 22313-1450
www.uspto.gov

APPLICATION NO.	FILING DATE	FIRST NAMED INVENTOR	ATTORNEY DOCKET NO.	CONFIRMATION NO.
09/810,514	03/15/2001	David Chao	85160.924/T00071	6193

33438 7590 06/23/2004

HAMILTON & TERRILE, LLP
P.O. BOX 203518
AUSTIN, TX 78720

EXAMINER	
RUDY, ANDREW J	

ART UNIT	PAPER NUMBER
3627	

DATE MAILED: 06/23/2004

Please find below and/or attached an Office communication concerning this application or proceeding.

Office Action Summary	Application No.	Applicant(s)	
	09/810,514	CHAO ET AL.	
	Examiner	Art Unit	
	Andrew Joseph Rudy	3627	

-- The MAILING DATE of this communication appears on the cover sheet with the correspondence address --

Period for Reply

A SHORTENED STATUTORY PERIOD FOR REPLY IS SET TO EXPIRE 1 MONTH(S) FROM THE MAILING DATE OF THIS COMMUNICATION.

- Extensions of time may be available under the provisions of 37 CFR 1.136(a). In no event, however, may a reply be timely filed after SIX (6) MONTHS from the mailing date of this communication.
- If the period for reply specified above is less than thirty (30) days, a reply within the statutory minimum of thirty (30) days will be considered timely.
- If NO period for reply is specified above, the maximum statutory period will apply and will expire SIX (6) MONTHS from the mailing date of this communication.
- Failure to reply within the set or extended period for reply will, by statute, cause the application to become ABANDONED (35 U.S.C. § 133). Any reply received by the Office later than three months after the mailing date of this communication, even if timely filed, may reduce any earned patent term adjustment. See 37 CFR 1.704(b).

Status

1)☐ Responsive to communication(s) filed on _____.

2a)☐ This action is **FINAL**. 2b)☐ This action is non-final.

3)☐ Since this application is in condition for allowance except for formal matters, prosecution as to the merits is closed in accordance with the practice under *Ex parte Quayle*, 1935 C.D. 11, 453 O.G. 213.

Disposition of Claims

4)☒ Claim(s) 1-64 is/are pending in the application.

4a) Of the above claim(s) _____ is/are withdrawn from consideration.

5)☐ Claim(s) _____ is/are allowed.

6)☐ Claim(s) _____ is/are rejected.

7)☐ Claim(s) _____ is/are objected to.

8)☒ Claim(s) 1-64 are subject to restriction and/or election requirement.

Application Papers

9)☐ The specification is objected to by the Examiner.

10)☐ The drawing(s) filed on _____ is/are: a)☐ accepted or b)☐ objected to by the Examiner.

Applicant may not request that any objection to the drawing(s) be held in abeyance. See 37 CFR 1.85(a).

Replacement drawing sheet(s) including the correction is required if the drawing(s) is objected to. See 37 CFR 1.121(d).

11)☐ The oath or declaration is objected to by the Examiner. Note the attached Office Action or form PTO-152.

Priority under 35 U.S.C. § 119

12)☐ Acknowledgment is made of a claim for foreign priority under 35 U.S.C. § 119(a)-(d) or (f).

a)☐ All b)☐ Some * c)☐ None of:

1.☐ Certified copies of the priority documents have been received.

2.☐ Certified copies of the priority documents have been received in Application No. _____.

3.☐ Copies of the certified copies of the priority documents have been received in this National Stage application from the International Bureau (PCT Rule 17.2(a)).

* See the attached detailed Office action for a list of the certified copies not received.

Attachment(s)

1) ☐ Notice of References Cited (PTO-892)
2) ☐ Notice of Draftsperson's Patent Drawing Review (PTO-948)
3) ☐ Information Disclosure Statement(s) (PTO-1449 or PTO/SB/08) Paper No(s)/Mail Date _____.
4) ☐ Interview Summary (PTO-413) Paper No(s)/Mail Date. _____ .
5) ☐ Notice of Informal Patent Application (PTO-152)
6) ☐ Other: _____.

Election/Restrictions

1. Restriction to one of the following inventions is required under 35 U.S.C. 121:

I. Claims 1-42, drawn to a system for managing relationships, classified in class 711, subclass 1.

II. Claims 43-53, drawn to a method for managing relationships, classified in class 705, subclass 26.

III. Claims 54-64, drawn to a computer readable medium, classified in class 717, subclass 174.

The inventions are distinct, each from the other because of the following reasons:

2. Inventions Group II and Group I are related as process and apparatus for its practice. The inventions are distinct if it can be shown that either: (1) the process as claimed can be practiced by another materially different apparatus or by hand, or (2) the apparatus as claimed can be used to practice another and materially different process. (MPEP § 806.05(e)). In this case the process can be practiced by hand.

3. Inventions Group II and III are related as combination and subcombination. Inventions in this relationship are distinct if it can be shown that (1) the combination as claimed does not require the particulars of the subcombination as claimed for patentability, and (2) that the subcombination has utility by itself or in other combinations (MPEP § 806.05(c)). In the instant case, the combination as claimed does not require the particulars of the subcombination as claimed because no computer is recited. The subcombination has separate utility such as a management tool in a supply chain arrangement.

4. Because these inventions are distinct for the reasons given above and have acquired a separate status in the art as shown by their different classification, restriction for examination purposes as indicated is proper.

5. Because these inventions are distinct for the reasons given above and the search required for Group I is not required for Groups II or III, restriction for examination purposes as indicated is proper.

6. A telephone call was made to Mr. Kent Chambers on June 11, 2004 to request an oral election to the above restriction requirement, but did not result in an election being made.

Applicant is advised that the reply to this requirement to be complete must include an election of the invention to be examined even though the requirement be traversed (37 CFR 1.143).

7. Applicant is reminded that upon the cancellation of claims to a non-elected invention, the inventorship must be amended in compliance with 37 CFR 1.48(b) if one or more of the currently named inventors is no longer an inventor of at least one claim remaining in the application. Any amendment of inventorship must be accompanied by a request under 37 CFR 1.48(b) and by the fee required under 37 CFR 1.17(i).

8. Any inquiry concerning this communication or earlier communications from the examiner should be directed to Andrew Joseph Rudy whose telephone number is 703-308-7808. The examiner can normally be reached on Tuesday thru Friday, 7:30 a.m until 6 p.m..

If attempts to reach the examiner by telephone are unsuccessful, the examiner's supervisor, Mr. Robert Olszewski can be reached on (703) 308-5183. The fax phone number for the organization where this application or proceeding is assigned is 703-872-9306.

Information regarding the status of an application may be obtained from the Patent Application Information Retrieval (PAIR) system. Status information for published applications may be obtained from either Private PAIR or Public PAIR. Status information for unpublished applications is available through Private PAIR only. For more information about the PAIR system, see http://pair-direct.uspto.gov. Should you have questions on access to the Private PAIR system, contact the Electronic Business Center (EBC) at 866-217-9197 (toll-free).

Andrew Joseph Rudy
June 16, 2004

Index of Claims

Application No.	Applicant(s)
09/810,514	CHAO ET AL.
Examiner	**Art Unit**
Andrew Joseph Rudy	3627

√	Rejected	–	(Through numeral) Cancelled	N	Non-Elected	A	Appeal
=	Allowed	÷	Restricted	I	Interference	O	Objected

Claim		Date
Final	Original	6/16/04
	1	1-20
	2	
	3	
	4	
	5	
	6	
	7	
	8	
	9	
	10	
	11	
	12	
	13	
	14	
	15	
	16	
	17	
	18	
	19	
	20	
	21	
	22	
	23	
	24	
	25	
	26	
	27	
	28	
	29	
	30	
	31	
	32	
	33	
	34	
	35	
	36	
	37	
	38	
	39	
	40	
	41	
	42	
	43	
	44	
	45	
	46	
	47	
	48	
	49	
	50	1-20

Claim		Date
Final	Original	6/16/04
	51	1-20
	52	
	53	
	54	
	55	
	56	
	57	
	58	
	59	
	60	
	61	
	62	
	63	
	64	21-64
	65	
	66	
	67	
	68	
	69	
	70	
	71	
	72	
	73	
	74	
	75	
	76	
	77	
	78	
	79	
	80	
	81	
	82	
	83	
	84	
	85	
	86	
	87	
	88	
	89	
	90	
	91	
	92	
	93	
	94	
	95	
	96	
	97	
	98	
	99	
	100	

Claim		Date
Final	Original	
	101	
	102	
	103	
	104	
	105	
	106	
	107	
	108	
	109	
	110	
	111	
	112	
	113	
	114	
	115	
	116	
	117	
	118	
	119	
	120	
	121	
	122	
	123	
	124	
	125	
	126	
	127	
	128	
	129	
	130	
	131	
	132	
	133	
	134	
	135	
	136	
	137	
	138	
	139	
	140	
	141	
	142	
	143	
	144	
	145	
	146	
	147	
	148	
	149	
	150	

CIPE
OCT 26 2004
PATENT & TRADEMARK OFFICE

IN THE UNITED STATES PATENT AND TRADEMARK OFFICE

Applicants:	David Chao, Brian Blount, Charles Erickson, Shari Gharavy, Cheng Zhou, Joshua Toub		
Assignee:	Trilogy Development Group, Inc.		
Title:	METHOD AND SYSTEM FOR MANAGING DISTRIBUTOR INFORMATION		
Serial No.:	09/810,514	Filing Date:	March 15, 2001
Examiner:	Andrew J. Rudy	Group Art Unit:	1792
Docket No.:	T00071	Customer No.:	33438

Austin, Texas
October 22, 2004

COMMISSIONER FOR PATENTS
PO Box 1450
Alexandria, VA 22313-1450

RESPONSE TO RESTRICTION REQUIREMENT

Dear Sir:

This paper is responsive to the Office Action dated June 23, 2004 having a shortened statutory period expiring July 23, 2004. This paper is accompanied by a Petition for Extension of Time giving Applicants until October 25, 2004 (October 23, 2004 being a Sunday) to respond.

A preliminary amendment accompanies this Response.

Applicants elect Group I, claims 1-42 with traverse.

The Examiner has required restriction to one of the following inventions under 35 U.S.C. § 121:

I. Claims 1-42, drawn to a browser method, classified in class 711, subclass 1.

II. Claims 43-53, drawn to a browser device, classified in class 705, subclass 26.

III. Claims 54-64, drawn to a storage medium, classified in class 717, subclass 174.

Ex. 1002 154/597

Groups I and II

The Examiner states:

> Inventions of Group II and Group I are related as process and apparatus for its practice. The inventions are distinct if it can be shown that either: (1) the process as claimed can be practiced by another materially different apparatus or by hand, or (2) the apparatus as claimed can be used to practice another an materially different process. (MPEP § 806.05(e)). In this case the process can be practiced by hand.
>
> -Office Action, para. 2 -

The concurrently filed preliminary amendment accompanying this Response amends claim 43 to recite:

> 43. A method for using a data processing system for managing relationships between a first party and a second party comprising:
>
> generating a selling agreement using resources of the data processing system to define ~~defining~~ a relationship between a first party and a second party;
>
> determining a commission amount associated with a sales transaction based on said selling agreement using resources of the data processing system;
>
> determining if said second party associated with said sales transaction has a valid license using resources of the data processing system; and
>
> distributing said commission amount to individuals associated with said sales transaction using resources of the data processing system.

In light of the amendment to claim 43, Applicants respectfully request withdrawal of the restriction requirement between Groups I and II.

Groups II and III

The Examiner also states:

> Inventions Group II and III are related as combination and subcombination. Inventions in this relationships are distinct if it can be shown that (1) the combination as claimed does not require the particulars of the subcombination as claimed for patentability, and (2) that the subcombination has utility by itself or in other combinations (MPEP § 806.05(c)). In the instant case, the combination as claimed does not require the particulars of the subcombination as claimed because no computer is recited. The subcombination has separate utility such as a management tool in a supply chain arrangement.

Ex. 1002 155/597

-Office Action, para. 3 -

In light of the amendment to claim 43, Applicants respectfully request withdrawal of the restriction requirement between Groups I and II because a data processing system is recited in now recited in claim 43. Accordingly, two-distinctiveness under MPEP § 806.05(c) is not present.

Groups I & II and III

The Examiner also states:

> Because these inventions are distinct for the reasons given above and the search required for Group I is not required for Groups II or III, restriction for examination purposes as indicated is proper.
>
> -Office Action, para. 5 -

Applicants respectfully submit that Applicants have established grounds for withdrawing the restriction between Groups I and II and between Groups II and III. Applicants are uncertain as to the specific basis for restricting Group I from Groups II and III other than that 'a different search is required.' Applicants respectfully request that the Examiner recite the specific grounds, if any, for restricting Group I from Groups II and III or withdraw the restriction.

Applicants respectfully submit that the classification of the invention of Group I in class 711, subclass 1 appears to be incorrect and classification of Group III in class 717, subclass 174 also appears to be incorrect. Thus, Applicants respectfully submit that the Examiner has not established the need for a separate search between Group I and Groups II or III.

The definition of class 711, subclass 1 is:

ADDRESSING COMBINED WITH SPECIFIC MEMORY CONFIGURATION OR SYSTEM:

This subclass is indented under the class definition. Subject matter comprising means or steps for determining one or more values (i.e., address data) that specify one or more locations in a storage medium wherein the means or steps are claimed in combination with a particular configuration or system for storing data.

(1) Note. Classification herein requires significant address manipulating (i.e., more than nominal recitation of an addressing technique). Significant address manipulating is

exemplified by address data processing functions such as combining, translating, mapping, and other techniques associated with forming or modifying address data.

(2) Note. Means or steps for determining a value that specifies a memory location (i.e., address data) must include more than nominal recitation of processing functions and memory components for classification herein.

(3) Note. This subclass and those indented below provide for combinations of data processing, particular memory systems, and significant address data manipulating. Generalized addressing in a digital data processing system is classified elsewhere in this class. See the SEARCH THIS CLASS, SUBCLASS notes below.

(4) Note. This subclass and those indented below may include means (e.g., processor, controller, etc.) or steps for control of a memory of a digital data processing system in combination with memory accessing (e.g., reading, writing). Memory accessing and control for specific memory compositions, hierarchical memory configurations, and shared memory, however, is classified elsewhere. See the SEARCH THIS CLASS, SUBCLASS notes below.

(5) Note. Means or steps for accessing and controlling plural memory configurations (e.g., data farms, "library" systems) that include significant data processing are classified herein. Control systems for delivering storage media (e.g., delivery of robotics or automated tapes or cartridges, selection and delivery of platters), however, are properly classified elsewhere under automated control or another appropriate subclass in the respective device, robotics, and generic control classes. In instances involving significant data processing and significant details of media delivery systems, classification herein is proper.

The definition of class 717, subclass 174 is:

SOFTWARE INSTALLATION:

This subclass is indented under the class definition. Subject matter including means or steps for setting up and preparing an operating system, application program, or other executable program for operation on a computer program.

(1) Note. Subject matter under this definition may include preparation of installation packages including program files to be installed and other files such as batch files or scripts necessary to implement the installation of the program files on a target computer. Code generation and development of programs using software development tools are classified elsewhere in this class. See the SEE OR SEARCH THIS CLASS, SUBCLASS notes below.
(2) Note. The subject matter for this subclass is limited to installation of different versions of executable programs and operating systems. As evidenced by the many notes which follow, the generic concept version management is classified in different classes under various titles, such as document version management, file and database maintenance, and managing source code. Therefore, a concept

search for version management, per se, should include consideration of these related topics in the other classes. See the SEE OR SEARCH CLASS notes below.
(3) Note. Installation under this definition may include checking for compatibility between specific versions of application programs and operating systems already installed or to be installed on a target system. Means and steps for making systems compatible with one another, per se, are classified in different classes under topics such as emulation, peripheral configuring, peripheral adapting, network computer configuring, and digital data processing system initialization and configuration, per se (e.g., initializing, setup, configuration, and resetting). A concept search on the topic of compatibility should consider these related areas in the other classes. See the SEE OR SEARCH CLASS notes below.
(4) Note. For the purpose of this definition, installation is defined as a one-time loading event which occurs only when a new version of an operating system or application program is updated and released.

(5) Note. For the purpose of this definition, the installation of software includes the local and remote loading or copying of an operating system, application program, or other executable program onto a target storage medium such as a hard disk, tape drive, or memory device; and version management includes keeping track of the installed version of an operating system, application program, or other executable program.
(6) Note. This subclass is directed to the processes for installing software. Medium for delivering software, per se, such as punched cards, paper or magnetic tapes, magnetic and optical disks, pluggable modules, cartridges and cards, networks, and memories are classified in the appropriate device class. When claimed in combination with installation they are classified here.
(7) Note. This subclass accepts generic installation of software locally or over a network. However, purchasing software over a network divorced from installation is classified elsewhere. See the SEE OR SEARCH CLASS notes below.

(8) Note. The identification of the specific hardware and/or software resources required by a particular version of operating system or application program being installed is also properly classified here. However, recovering from faults in digital data processing systems, locating faults, or detecting faults in digital data processing systems to ensure reliability and availability is classified elsewhere. See the SEE OR SEARCH CLASS notes below.

(9) Note. Subject matter under this definition may include compression and decompression of files to be installed on a target system. Compression and decompression of data, per se, is classified elsewhere.

CONCLUSION

In light of the foregoing remarks, Applicants respectfully request withdrawal of all restrictions in the present application and examination in a single application of Groups I, II, and III.

Nonetheless, should any issues remain that might be subject to resolution through a telephonic interview, the examiner is requested to telephone the undersigned.

I hereby certify that this correspondence is being deposited with the United States Postal Service as First Class Mail in an envelope addressed to: Mail Stop Amendment, COMMISSIONER FOR PATENTS, P.O. Box 1450, Alexandria, VA 22313-1450, on October 22, 2004.

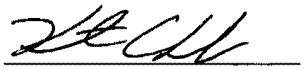

Attorney for Applicant(s)

10-22-2004

Date of Signature

Respectfully submitted,

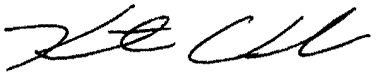

Kent B. Chambers
Attorney for Applicant(s)
Reg. No. 38,839

OIPE
OCT 26 2004
JC24
PATENT & TRADEMARK OFFICE

1792

IN THE UNITED STATES PATENT AND TRADEMARK OFFICE

Applicants:	David Chao, Brian Blount, Charles Erickson, Shari Gharavy, Cheng Zhou, Joshua Toub		
Assignee:	Trilogy Development Group, Inc.		
Title:	METHOD AND SYSTEM FOR MANAGING DISTRIBUTOR INFORMATION		
Serial No.:	09/810,514	Filing Date:	March 15, 2001
Examiner:	Andrew J. Rudy	Group Art Unit:	1792
Docket No.:	T00071	Customer No.:	33438

Austin, Texas
October 22, 2004

COMMISSIONER FOR PATENTS
PO Box 1450
Alexandria, VA 22313-1450

PRELIMINARY AMENDMENT

Dear Sir:

The following Amendments and Remarks are submitted for entry into U.S. Patent Application, Serial No. 09/810,514, filed on March 15, 2001.

Ex. 1002-160/597

AMENDMENTS TO THE CLAIMS

1. (Original) A system for managing relationships between a first party and a second party comprising:

at least one processor;

memory coupled to said at least one processor;

said memory comprising a plurality of modules configured to manage distributor information;

said plurality of modules comprising a selling agreements module configured to generate a selling agreement;

said plurality of modules comprising a commission module configured to determine commission amounts associated with a sales transaction based on said selling agreement;

said plurality of modules comprising a licensing module configured to determine if a party associated with said sales transaction has a valid license;

said plurality of modules comprising a payment module for distributing payment associated with sales transaction to said party .

2. (Original) The system of claim 2 wherein said licensing module is further configured to determine if a party associated with said sales transaction comprises a valid appointment.

3. (Original) The system of claim 1 wherein said plurality of modules further comprises a distributor administration module configured to manage information associated with a plurality of distributors.

4. (Original) The system of claim 1 wherein said selling agreement comprises compensation components.

5. (Original) The system of claim 4 wherein said selling agreement comprises document components.

Ex. 1002 161/597

6. (Original) The system of claim 5 wherein said selling agreements module configured to generate said selling agreement utilizes a configuration engine to determine which of said compensation components and said document components to include.

7. (Original) The method of claim 6 wherein said commission module accesses a commission engine to determine said commission amounts.

8. (Original) The system of claim 1 wherein said selling agreement comprises a binding contract between an institution having at least one product and a distributor.

9. (Original) The system of claim 8 wherein said institution comprises financial institution.

10. (Original) The system of claim 8 wherein said product comprise financial product.

11. (Original) The system of claim 10 wherein said financial product comprises life insurance.

12. (Original) A system for managing relationships between a first party and a second party comprising:

a database source comprising a plurality of data objects representative of at least one distributing party, at least one selling agreement and at least one license or appointment associated with said at least one distributing party;

a distributor management engine configured to obtain at least one of said plurality of data objects from said database source and determine whether said at least one distributing party conforms with said at least one selling agreement and said at least one license or appointment is valid.

Ex. 1002-162/597

13. (Original) The system of claim 12 further comprising:

a backbone coupled to said distributor management engine, said backbone configured to transport said at least one of said plurality of data objects.

14. (Original) The system of claim 12 further comprising:

an interface for obtaining a plurality of business rules defining relationships between an institution and said at least one distributing party.

15. (Original) The system of claim 13 further comprising:

a commission engine configured to utilize said backbone to fetch said at least one selling agreement from said database source.

16. (Original) The system of claim 15 wherein said commission engine generates commission schemes utilized to model a set of selling agreement objects.

17. (Original) The system of claim 16 wherein said distributor management engine generates payments based on said selling agreement objects.

18. (Original) The system of claim 12 further comprising:

a workflow process engine configured to process workflow events.

19. (Original) The system of claim 18 wherein said workflow process events are determined by business rules defined by a user.

20. (Original) The system of claim 19 further comprising:

a commerce configuration engine configured to provide a configuration engine access to said business rules.

21. (Original) The system of claim 12 further comprising:

a report engine configured to generate a plurality of reports associated with said at least one distributing party.

Ex. 1002 163/597

22. (Original) The system of claim 21 wherein said report engine utilizes report templates to generate said plurality of reports.

23. (Original) The system of claim 12 further comprising:
a distributor administration module for managing said plurality of data objects.

24. (Original) The system of claim 12 further comprising:
a licensing and appointment module configured to enable an institution to manage said at least one license or appointments data object for at least one said distributor.

25. (Original) The system of claim 24 wherein said licensing and appointment module is configured to validate license or appointment compliance with a set of industry regulations by evaluating said at least one license or appointment data object.

26. (Original) The system of claim 12 further comprising:
a selling agreements module configured to enable said institution to define and create a business contract with said at least one distributing party.

27. (Original) The system of claim 26 wherein said selling agreements module manages a set of business rules governing how contract components are combined into said at least one selling agreement associated with each of said at least one distributing party.

28. (Original) The system of claim 27 further comprising:
a debt management module configured to enable said institution to manage distributor advances and repayments.

29. (Original) The system of claim 28 wherein said debt management module is utilized to define and manage a set of payment rules defining parameters for paying said at least one distributing party.

30. (Original) The system of claim 12 further comprising:

a net pay module enabling said institution to track and calculate payments to distributors.

31. (Original) The system of claim 12 wherein said institution comprises a financial services institution.

32. (Original) A system for managing relationships between a first party and a second party comprising:

an interface for obtaining a plurality of business rules defining relationships between an institution and at least one distributor;

a database source comprising a plurality of data objects representative of said at least one distributor, at least one selling agreement and at least one license or appointment associated with said at least one distributor;

a commission engine configured to determine a commission amount associated with said at least one distributor by evaluating said at least one selling agreement data object;

a backbone coupled to said distributor management engine, said backbone configured to transport said at least one of said plurality of data objects to a plurality of modules;

said plurality of modules comprising, a distributor administration module for managing said plurality of data objects;

said plurality of modules comprising, a licensing and appointment module configured to determine if said at least one license or appointment data object associated with said at least one distributor is in compliance with a set of industry regulations;

said plurality of modules comprising, a selling agreements module configured to enable said institution to define and create a selling agreement with said at least one distributor;

said plurality of modules comprising, a payment module configured to distribute said commission amount to said at least one distributor.

33. (Original) The system of claim 32 wherein said commission engine utilizes said backbone to fetch said at least one selling agreement from said database source.

34. (Original) The system of claim 32 further comprising:

a workflow process engine configured to process workflow events, said workflow process events determined by said business rules.

35. (Original) The system of claim 32 further comprising:

a commerce configuration engine configured to provide access to said business rules.

36. (Original) The system of claim 32 further comprising:

a report engine configured to generate a plurality of reports associated with said at least one distributor.

37. (Original) The system of claim 36 wherein said report engine utilizes report templates to generate said plurality of reports.

38. (Original) The system of claim 32 wherein said selling agreement comprises a contract between said institution and said at least one distributor.

39. (Original) The system of claim 38 wherein said selling agreements module manages a set of business rules governing how contract components are combined into said at least one selling agreement associated with each of said at least one distributors.

40. (Original) The system of claim 32 further comprising:

a debt management module configured to enable said institution to manage distributor advances and repayments.

41. (Original) The system of claim 28 wherein said debt management module is utilized to define and manage a set of payment rules defining parameters for paying said at least one distributor.

42. (Original) The system of claim 12 wherein said institution comprises a financial services institution.

43. (Currently Amended) A method for using a data processing system for managing relationships between a first party and a second party comprising:

generating a selling agreement ~~defining~~ using resources of the data processing system to define a relationship between a first party and a second party;

determining a commission amount associated with a sales transaction based on said selling agreement using resources of the data processing system;

determining if said second party associated with said sales transaction has a valid license using resources of the data processing system;

distributing said commission amount to individuals associated with said sales transaction using resources of the data processing system.

44. (Original) The method of claim 43 further comprising:

determining if said second party associated with said sales transaction comprises a valid appointment.

45. (Original) The method of claim 43 wherein said selling agreement comprises compensation components.

46. (Original) The method of claim 45 wherein said selling agreement comprises document components.

47. (Original) The method of claim 43 wherein said generating said selling agreement further comprises:

obtain rules associated with said selling agreement;

determining which of said compensation components and said document components to include in said selling agreement based on said rules.

Ex. ~~1002~~ 167/597

48. (Original) The method of claim 43 further comprising:

accessing a commission model to determine said commission amounts.

49. (Original) The method of claim 43 wherein said first party comprises an institution having at least one product to be sold by a second party.

50. (Original) The method of claim 49 wherein said second party comprises a distributor.

51. (Original) The method of claim 49 wherein said institution comprises a financial institution.

52. (Original) The method of claim 51 wherein said at least one product comprise financial product.

53. (Original) The method of claim 52 wherein said financial product comprises life insurance.

54. (Original) A computer program product comprising:

a computer usable medium comprising computer readable code for managing relationships between a first party and a second party comprising, said computer readable program code configured to:

generate a selling agreement defining a relationship between a first party and a second party;

determine a commission amount associated with a sales transaction based on said selling agreement;

determine if said second party associated with said sales transaction has a valid license;

distribute said commission amount to individuals associated with said sales transaction.

Ex. 1002 168/597

55. (Original) The computer program product of claim 54 further comprising computer readable program code configured to determine if said second party associated with said sales transaction comprises a valid appointment.

56. (Original) The computer program product of claim 54 wherein said selling agreement comprises compensation components.

57. (Original) The computer program product of claim 56 wherein said selling agreement comprises document components.

58. (Original) The computer program product of claim 54 wherein said computer readable program code configured to generate said selling agreement further comprises computer readable code configured to:

obtain rules associated with said selling agreement;

determining which of said compensation components and said document components to include in said selling agreement based on said rules.

59. (Original) The computer program product of claim 54 further comprising computer readable program code configured to access a commission model to determine said commission amounts.

60. (Original) The computer program product of claim 54 wherein said first party comprises an institution having at least one product to be sold by a second party.

61. (Original) The computer program product of claim 60 wherein said second party comprises a distributor.

62. (Original) The computer program product of claim 60 wherein said institution comprises a financial institution.

63. (Original) The computer program product of claim 60 wherein said at least one product comprises a financial product.

64. (Original) The computer program product of claim 63 wherein said financial product comprises life insurance.

Ex. 1002 170/597

REMARKS

Claims 1-64 are pending. Claim 43 has been amended.

In view of the amendments and remarks set forth herein, the application is believed to be in condition for allowance and a notice to that effect is solicited. Nonetheless, should any issues remain that might be subject to resolution through a telephonic interview, the examiner is requested to telephone the undersigned.

I hereby certify that this correspondence is being deposited with the United States Postal Service as First Class Mail in an envelope addressed to: Commissioner for Patents, Washington, D.C. 20231, on October 22, 2004.

Attorney for Applicant(s) — Date of Signature: 10-22-2004

Respectfully submitted,

Kent B. Chambers
Attorney for Applicant(s)
Reg. No. 38,839

Ex. 1002 171/597

OIPE JC24
OCT 26 2004
PATENT & TRADEMARK OFFICE

IN THE UNITED STATES PATENT AND TRADEMARK OFFICE

Applicants:	David Chao, Brian Blount, Charles Erickson, Shari Gharavy, Cheng Zhou, Joshua Toub		
Assignee:	Trilogy Development Group, Inc.		
Title:	METHOD AND SYSTEM FOR MANAGING DISTRIBUTOR INFORMATION		
Serial No.:	09/810,514	Filing Date:	March 15, 2001
Examiner:	Andrew J. Rudy	Group Art Unit:	1792
Docket No.:	T00071	Customer No.:	33438

Austin, Texas
October 22, 2004

Mail Stop Amendment
Commissioner for Patents
P.O. Box 1450
Alexandria, VA 22313-1450

PETITION FOR EXTENSION OF TIME

Dear Sir:

Applicant respectfully petitions for a three (3) month extension of time within which to respond to the April 23, 2004, outstanding Office Action, such extension allowing the undersigned until October 25, 2004 (October 23, 2004 being a Sunday) to respond.

Enclosed is a check for $980.00 to cover the fee for the requested extension. Please deduct any additional fee which may be necessary or credit any overpayment to Deposit Account No. 502264.

I hereby certify that this correspondence is being deposited with the United States Postal Service as First Class Mail in an envelope addressed to: Mail Stop Amendment, COMMISSIONER FOR PATENTS, P.O. Box 1450, Alexandria, VA 22313-1450, on October 22, 2004.

Attorney for Applicant(s) — 10-22-2004 Date of Signature

Respectfully submitted,

Kent B. Chambers
Attorney for Applicant(s)
Reg. No. 38,839

10/27/2004 CNGUYEN 00000010 09810514
01 FC:1253 980.00 OP

OIPE JC151 NOV 2 2 2004 PATENT & TRADEMARK OFFICE

1792

IN THE UNITED STATES PATENT AND TRADEMARK OFFICE

Applicants:	David Chao, Brian Blount, Charles Erickson, Shari Gharavy, Cheng Zhou, Joshua Toub
Assignee:	Trilogy Development Group, Inc.
Title:	METHOD AND SYSTEM FOR MANAGING DISTRIBUTOR INFORMATION

Serial No.:	09/810,514	Filing Date:	March 15, 2001
Examiner:	Andrew J. Rudy	Group Art Unit:	1792
Docket No.:	T00071	Customer No.:	33438

Austin, Texas
November 19, 2004

COMMISSIONER FOR PATENTS
PO Box 1450
Alexandria, VA 22313-1450

INFORMATION DISCLOSURE STATEMENT WITH FEE

Sir:

Pursuant to 37 C.F.R. § 1.56, § 1.97 and § 1.98, Applicants wish to call the following documents to the attention of the Examiner.

A PTO form 1449 listing these documents is enclosed.

Citation of the above documents shall not be construed as:

1. an admission that the documents are necessarily prior art with respect to the instant invention;
2. a representation that a search has been made, other than as described above; or
3. an admission that the information cited herein is, or is considered to be, material to patentability as defined in § 1.56(b).

A check for $180.00 is enclosed for the Information Disclosure Statement fee under 37 C.F.R. §1.17(p). The Commissioner is hereby authorized to charge any additional fees which may be required, or credit any overpayment to Deposit Account 502264.

I hereby certify that this correspondence is being deposited with the United States Postal Service as First Class Mail in an envelope addressed to: COMMISSIONER FOR PATENTS, P.O. Box 1450, Alexandria, VA 22313-1450, on November 19, 2004.

Attorney for Applicant(s) — Date of Signature: 11-19-2004

Respectfully submitted,

Kent B. Chambers
Attorney for Applicant(s)
Reg. No. 38,839

11/24/2004 AWONDAF1 00000017 09810514
01 FC:1806 180.00 OP

U.S. Department of Commerce, Patent and Trademark Office	Attorney Docket No.	Serial No.
	T00071	09/810,514
INFORMATION DISCLOSURE STATEMENT BY APPLICANT	Applicant(s)	
(Use several sheets if necessary)	David Chao, et al.	
	Filing Date	Group
	March 15, 2001	1792

OIPE SC151 NOV 22 2004 PATENT & TRADEMARK OFFICE

U.S. Patent Documents

*Examiner Initial		Document Number	Date	Name	Class	Subclass	Filing Date If Appropriate
	AA	6,662,164	12/09/03	Koppelman et al.	705	14	
	AB	6,275,871	08/14/01	Reinfelder et al.	709	328	
	AC	5,483,444	01/09/96	Heintzeman et al.	364	401	
	AD	4,825,360	04/25/89	Knight, Jr.	364	200	
	AE						
	AF						
	AG						
	AH						
	AI						
	AJ						
	AK						

Foreign Patent Documents

							Translation	
		Document	Date	Country	Class	Subclass	Yes	No
	AL	EP 0817017 A2	01/1998	Europe	G06F	9/46	☐	☐
	AM						☐	☐
	AN						☐	☐
	AO							
	AP							

OTHER ART (Including Author, Title, Date, Pertinent Pages, Etc.)

	AR	Hansen, Hans Robert, "Wirtschaftsinformatik I," Lucius & Lucius
	AS	Trilogy-Volvo Master License Agreement, April 29, 1997.
	AT	U.S. Patent & Trademark Office, PALM Sample Printouts, published October 31, 1989

Examiner	Date Considered

*EXAMINER: Initial if reference considered, whether or not citation is in conformance with MPEP 609; Draw line through citation if not in conformance and not considered. Include copy of this form with your communication to applicant.

U.S. Department of Commerce, Patent and Trademark Office	Attorney Docket No.	Serial No.
	T00071	09/810,514
INFORMATION DISCLOSURE STATEMENT BY APPLICANT	Applicant(s)	
(Use several sheets if necessary)	David Chao, et al.	
	Filing Date	Group
	March 15, 2001	1792

OIPE JC15 NOV 22 2004 PATENT & TRADEMARK OFFICE

U.S. Patent Documents

*Examiner Initial		Document Number	Date	Name	Class	Subclass	Filing Date If Appropriate
	AA						
	AB						
	AC						
	AD						
	AE						
	AF						
	AG						
	AH						
	AI						
	AJ						
	AK						

Foreign Patent Documents

							Translation	
		Document	Date	Country	Class	Subclass	Yes	No
	AL						☐	☐
	AM						☐	☐
	AN						☐	☐
	AO							
	AP							

OTHER ART (Including Author, Title, Date, Pertinent Pages, Etc.)

	AR	U.S. Patent & Trademark Office, Examiner's Bi-Weekly Time Worksheet (FORM PTO 690E), 1995.
	AS	Martin, James, Principles of Object-Oriented Analysis and Design, Prentice Hall, 1993.
	AT	Patent Office Professional Association, Agreement between U.S. Department of Commerce/Patent and Trademark Office and the Patent Office Professional Association, pp. 39, 93, 94, 97-100, 1986.

Examiner	Date Considered

*EXAMINER: Initial if reference considered, whether or not citation is in conformance with MPEP 609; Draw line through citation if not in conformance and not considered. Include copy of this form with your communication to applicant.

U.S. Department of Commerce, Patent and Trademark Office	Attorney Docket No.	Serial No.
	T00071	09/810,514
INFORMATION DISCLOSURE STATEMENT BY APPLICANT	Applicant(s)	
(Use several sheets if necessary)	David Chao, et al.	
	Filing Date	Group
	March 15, 2001	1792

OIPE SC151 NOV 2 2 2004 PATENT & TRADEMARK OFFICE

U.S. Patent Documents

*Examiner Initial		Document Number	Date	Name	Class	Subclass	Filing Date If Appropriate
	AA						
	AB						
	AC						
	AD						
	AE						
	AF						
	AG						
	AH						
	AI						
	AJ						
	AK						

Foreign Patent Documents

							Translation	
		Document	Date	Country	Class	Subclass	Yes	No
	AL						☐	☐
	AM						☐	☐
	AN						☐	☐
	AO							
	AP							

OTHER ART (Including Author, Title, Date, Pertinent Pages, Etc.)

	AR	U.S. Patent and Trademark Office, Manual of Patent Program Procedure, published October 31, 1989
	AS	U.S. Patent and Trademark Office, PALM 3 User's Guide, published October 31, 1989.
	AT	

Examiner	Date Considered

*EXAMINER: Initial if reference considered, whether or not citation is in conformance with MPEP 609; Draw line through citation if not in conformance and not considered. Include copy of this form with your communication to applicant.

(19) Europäisches Patentamt
European Patent Office
Office européen des brevets

(11) EP 0 817 017 A2

(12) EUROPEAN PATENT APPLICATION

(43) Date of publication:
07.01.1998 Bulletin 1998/02

(51) Int. Cl.[6]: **G06F 9/46**

(21) Application number: **97110675.2**

(22) Date of filing: **30.06.1997**

(84) Designated Contracting States:
AT BE CH DE DK ES FI FR GB GR IE IT LI LU MC NL PT SE

(30) Priority: **03.07.1996 US 676859**

(71) Applicant:
SIEMENS AKTIENGESELLSCHAFT
80333 München (DE)

(72) Inventors:
- **Dorn, Karlheinz, Dipl.-Inf.**
  90562 Kalchreuth (DE)
- **Becker, Detlef, Dipl.-Ing.**
  91096 Möhrendorf (DE)
- **Quehl, Dietrich, Dipl.-Ing.**
  91052 Erlangen (DE)
- **Reinfelder, Hans-Erich, Dr.**
  91054 Erlangen (DE)

(54) Application program interface system

(57) An object oriented communication system supporting external data representation without an interface definition language, propagating events in both push and pull communication modes, fully distributing events, client/server-RPC-like mode and server processing pattern management. An applications program interface for the communication system having two macro routines for building classes which make the classes transferrable by the communication system.

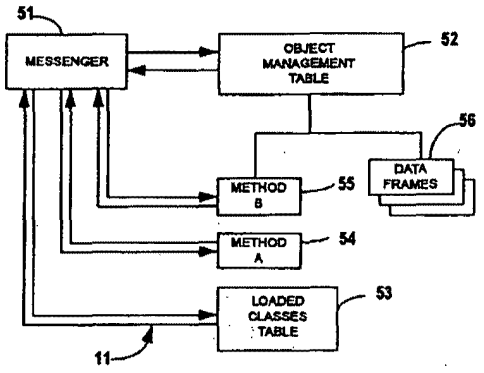

FIG 1

EP 0 817 017 A2

BEST AVAILABLE COPY

Description

BACKGROUND OF THE INVENTION

The present application is directed to application programmers interfaces (API) for programmer applications for communications systems.

As set forth in U.S. Patent No. 5,499,365, full incorporated herein by reference, object oriented programming systems and processes, also referred to as "object oriented computing environments," have been the subject of much investigation and interest. As is well known to those having skill in the art, object oriented programming systems are composed of a large number of "objects." An object is a data structure, also referred to as a "frame," and a set of operations or functions, also referred to as "methods," that can access that data structure. The frame may have "slots," each of which contains an "attribute" of the data in the slot. The attribute may be a primitive (such as an integer or string) or an object reference which is a pointer to another object. Objects having identical data structures and common behavior can be grouped together into, and collectively identified as a "class."

Each defined class of objects will usually be manifested in a number of "instances". Each instance contains the particular data structure for a particular example of the object. In an object oriented computing environment, the data is processed by requesting an object to perform one of its methods by sending the object a "message". The receiving object responds to the message by choosing the method that implements the message name, executing this method on the named instance, and returning control to the calling high level routine along with the results of the method. The relationships between classes, objects and instances traditionally have been established during "build time" or generation of the object oriented computing environment, i.e., prior to "run time" or execution of the object oriented computing environment.

In addition to the relationships between classes, objects and instances identified above, inheritance relationships also exist between two or more classes such that a first class may be considered a "parent" of a second class and the second class may be considered a "child" of the first class. In other words, the first class is an ancestor of the second class and the second class is a descendant of the first class, such that the second class (i.e., the descendant) is said to inherit from the first class (i.e., the ancestor) The data structure of the child class includes all of the attributes of the parent class.

Object oriented systems have heretofore recognized "versions" of objects. A version of an object is the same data as the object at a different point in time. For example, an object which relates to a "work in progress", is a separate version of the same object data which relates to a completed and approved work. Many applications also require historical records of data as it existed at various points in time. Thus, different versions of an object are required.

Two articles providing further general background are E.W. Dijkstra, The Structure of "THE" Multi programming System, Communications of the ACM, Vol. 11, No. 5, May 1968, pp. 341-346, and C.A.R. Hoare, Monitors: Operating Systems Structuring Concepts, Communications of the ACM, Vol. 17, No. 10, October, 1974, pp. 549-557, both of which are incorporated herein by reference. The earlier article describes methods for synchronizing using primitives and explains the use of semaphores while the latter article develops Brinch-Hansen's concept of a monitor as a method of structuring an operating system. In particular, the Hoare article introduces a form of synchronization for processes and describes a possible method of implementation in terms of semaphores and gives a proof rule as well as illustrative examples.

As set forth in the Hoare article, a primary aim of an operating system is to share a computer installation among many programs making unpredictable demands upon its resources. A primary task of the designer is, therefore, to design a resource allocation with scheduling algorithms for resources of various kinds (for example, main store, drum store, magnetic tape handlers, consoles). In order to simplify this task, the programmer tries to construct separate schedulers for each class of resources. Each scheduler then consists of a certain amount of local administrative data, together with some procedures and functions which are called by programs wishing to acquire and release resources. Such a collection of associated data and procedures is known as a monitor.

The adaptive communication environment (ACE) is an object-oriented type of network programming system developed by Douglas C. Schmidt, an Assistant Professor with the Department of Computer Science, School of Engineering and Applied Science, Washington University. ACE encapsulates user level units and WIN32 (Windows NT and Windows 95) OS mechanisms via type-secured, efficient and object-oriented interfaces:

- IPC mechanisms - Internet-domain and UNIX-domain sockets, TLI, Named pipes (for UNIX and Win 32) and STREAM pipes;
- Event multiplexing - via select() and poll() on UNIX and WaitForMultipleObjects on Win 32;
- Solaris threads, POSIX Pthreads, and Win 32 threads;
- Explicit dynamic linking facilities - e.g., dlopen/dlsym/dlclose on UNIX and LoadLibrary/GetProc on Win 32;
- Memory-mapped files;

- System VIPC - shared memory, semaphores, message queues; and
- Sun RPC (GNU rpc++).

In addition, ACE contains a number of higher-level class categories and network programming frameworks to integrate and enhance the lower-level C++ wrappers. The higher-level components in ACE support the dynamic configuration of concurrent network daemons composed of application services. ACE is currently being used in a number of commercial products including ATM signaling software products, PBX monitoring applications, network management and general gateway communication for mobile communications systems and enterprise-wide distributed medical systems. A wealth of information and documentation regarding ACE is available on the worldwide web at the following universal resource locator: http://www.cs.wustl.edu/...schmidt/ACE-overview.html.

The following abbreviations are or may be utilized in this application:

- Thread - a parallel execution unit within a process. A monitor synchronizes, by forced sequentialization, the parallel access of several simultaneously running Threads, which all call up functions of one object that are protected through a monitor.
- Synchronizations-Primitive - a means of the operating system for reciprocal justification of parallel activities.
- Semaphore - a Synchronizations-Primitive for parallel activities.
- Mutex - a special Synchronizations-Primitive for parallel activities, for mutual exclusion purposes, it includes a critical code range.
- Condition Queue - an event waiting queue for parallel activities referring to a certain condition.
- Gate Lock - a mutex of the monitor for each entry-function, for protection of an object, for allowing only one parallel activity at a time to use an Entry-Routine of the object.
- Long Term Scheduling - longtime delay of one parallel activity within a condition queue or event waiting queue for parallel activities.
- Broker - a distributor.

In addition, the following acronyms are or may be used herein:

AFM	Asynchronous Function Manager
SESAM	Service & Event Synchronous Asynchronous Manager
PAL	Programmable Area Logic
API	Application Programmers Interface
IDL	Interface Definition Language
ATOMIC	Asynchron Transport Optimizing observer-pattern-like system supporting several Modes (client/server - push/pull) for an IDL-less Communication subsystem, described herein
XDR	External Data Representation
I/O	Input/Output
IPC	Inter Process Communication
CSA	Common Software Architecture (a Siemens AG computing system convention)
SW	Software

SUMMARY OF THE INVENTION

The present invention provides a location and protocol transparent object oriented communication system that implicitly encodes and decodes transferred data, if connected peers reside on host with different internal data representation. In that regard, the invention provides an Asynchronous Transport Optimizing Observer- Pattern-Like system Supporting Several Modes for an Interface Definition Language- less Communication Subsystem (ATOMIC) as well as an application programming interface therefor. However, the data structure must be identical to that expected by the supplier.

In an embodiment, the invention provides an object oriented communication system on a computer platform, comprising:

means for supporting external data representation without an interface definition language; means for propagating events in both push and pull communication modes and selecting which mode is used for a given connection; means for distributing events; and means for server processing pattern management.

In an embodiment, the means for supporting external data representation without an interface definition language comprises means for implicitly coding and decoding transferred data.

In an embodiment, all communication end points that use the same address are logically connected.

In an embodiment, there is provided a hook routine which called at the supplier side before data is sent and a hook routine which is called before data is stored in a target object, both hook routines called with an environment string as an argument, both hook routines influencing data transfer.

In an embodiment, the invention further provides means for performing XDR encoding and decoding.

In an embodiment, the invention further provides a macro routine which makes a class accessible to a communication end-point.

In an embodiment, the macro routine makes the class accessible via the communication end point by declaring inserter and extractor operators of the communication systems internal encoder/decoder class as friends, and implementing short member functions and one member function pointer into the class.

In an embodiment, the invention further provide a macro routine which defines a subset of data members that are to be transferred and informs the underlying system as to how to deal with pointers and vectors.

In an embodiment, the macro routine has two arguments, a class name and a list of white space separated macro routines, one such macro routine for each transferrable data member.

In an embodiment, the invention provides a supplier class associated with a pattern string in order to transfer component classes to consumers associated with the same pattern string residing on a host.

In an embodiment, the supplier class is a template class and can only exist in conjunction with a concrete component class.

In an embodiment, the invention further provides a consumer class associated with a pattern string in order to receive component classes in PUSH mode or PULL mode from suppliers associated with the same pattern string residing on hosts.

In an embodiment, the consumer class is a template class and can only exist in conjunction with a concrete component class.

In an embodiment, the invention provides an object oriented communication system on a computer platform, comprising:

means for supporting external data representation without any interface definition language said means for supporting external data representation without an interface definition language comprises means for implicitly encoding and decoding transfer data; means for propagating events in both push and pull communication modes and selecting which mode is used for a given connection, including a hook routine called at the supplier side before data is sent and a hook routine called before data is stored in a target object, both hook routines called within an environment string as an argument; means for distributing events; and means for server processing pattern management, wherein all communication endpoints that use the same address are logically connected.

In an embodiment, the invention provides an object oriented communication system programmer interface on a computer platform, comprising: a first macro routine which makes a class accessible to a communication endpoint by declaring inserter and extractor operators of a communication systems internal encoder/decoder class as friends and implementing short member functions and one member function pointer into the class; and a second macro routine which defines a subset of data members that are to be transferred and informs the underlying system as to how to deal with pointers and vectors, a second macro routine having two arguments, a class name and a list of white space separated macro routines, one such white space separate macro routine for each transferrable data member.

In an embodiment, the invention provides a supplier class associated with a pattern string in order to transfer component classes to consumers associated with the same pattern string residing on a host.

In an embodiment, the supplier class is a template class and can only exist in conjunction with a concrete component class.

In an embodiment, the invention further provides a consumer class associated with a pattern string in order to receive component classes in PUSH mode or PULL mode from suppliers associated with the same pattern string residing on hosts.

In an embodiment, the consumer class is a template class and can only exist in conjunction with a concrete component class.

These and other features of the invention are discussed in greater detail below in the following detailed description of the presently preferred embodiments with reference to the accompanying drawings.

BRIEF DESCRIPTION OF THE DRAWINGS

Figure 1 illustrates a hardware and software environment.

Figure 2 illustrates the main components of an object-oriented program from Figure 5 of U.S. Patent No.

5,313,629.

Figure 3 illustrates an example of an inheritance hierarchy to an object oriented platform.

Figure 4 illustrates use of a setValue() using event propogation or client/server communication without reply.

Figure 5 illustrates blocking of a setValue() using client/server communication with reply.

Figure 6 illustrates a nonblocking setValue() using client/server communication with reply - waitFor...().

Figure 7 illustrates a nonblocking setValue() using client/server communication with reply - callback.

Figure 8 illustrates blocking getValue() without dataChanged() enabled.

Figure 9 illustrates sending no reply with dataChanged() enabled.

Figure 10 illustrates sending reply without dataChanged() enabled.

Figure 11 illustrates sending reply with dataChanged() enabled.

Figure 12 illustrates a nonblocking getValue() using waitForMultipleObjects.

Figure 13 illustrates a nonblocking getValue() using call-back function.

Figure 14 illustrates dispatching dataChanged() to handle incoming data.

Figure 15 illustrates blocking a PULL mode getValue() using NOWAIT flag.

Figure 16 illustrates dispatching dataChanged() to handle pulled data.

COPENDING APPLICATIONS

The following commonly assigned copending applications are fully incorporated herein by reference:

Title	Application NUMBER	Filing Date	Attorney Docket No.
MONITOR SYSTEM FOR SYNCHRONIZATION OF THREADS WITHIN A SINGLE PROCESS			GR 96 P 3106 E
SERVICE AND EVENT SYNCHRONOUS/ASYNCHRONOUS MANAGER			GR 96 P 3107 E
SOFTWARE ICS FOR HIGH LEVEL APPLICATION FRAMEWORKS			GR 96 P 3109 E

DETAILED DESCRIPTION OF THE PRESENTLY PREFERRED EMBODIMENTS

As stated above, the present invention (ATOMIC) provides a communication system application programmers interface (API) as well as basic mechanisms of the system itself.

Again referring to U.S. Patent No. 5,499365, in an object oriented computing environment, work is accomplished by sending action request messages to an object which contains data. The object will perform a requested action on the data according to its predefined methods. Objects may be grouped into object classes which define the types and meanings of the data, and the action requests (messages) that the object will honor. The individual objects containing data are called instances of the class.

Object classes can be defined to be subclasses of other classes. Subclasses inherit all of the data characteristics and methods of the parent class. They can add additional data and methods and they can override or redefine any data elements or methods of the parent class. An object may be represented schematically, and generally is represented herein by a rectangle. The upper rectangle contains the data structure represented by a frame having slots, each of

which contains an attribute of the data in the slot. The lower rectangle indicates the object's methods which encapsulate the frame and which are used to perform actions on the data encapsulated in the frame of the upper rectangle.

Figures 1,2 and 3 are reproduced herein from U.S. Patent No. 5,499,365. The following description relating thereto is derived from that patent.

Referring now to Figure 1, a hardware and software environment in which the present invention operates will now be described. As shown in Figure 1, the present invention is a method and system within an object oriented computing environment 11 operating on one or more computer platforms 12. It will be understood by those having skill in the art that computer platform 12 typically includes computer hardware units 13 such as a central processing unit (CPU) 14, a main memory 15 and an input/output (I/O) interface 16, and may include peripheral components such as a display terminal 21, an input device 22 such as a keyboard or a mouse, nonvolatile data storage devices 23 such as magnetic or optical disks, printers 24 and other peripheral devices. Computer platform 12 also typically includes microinstruction codes 26 and an operating system 28.

As shown in Figure 1, object oriented computing environment 11 operates on computer platform 12. It will be understood by those having skill in the art that object oriented computing environment may operate across multiple computer platforms. Object oriented computing environment 11 is preferably written in the C++ computer programming language. The design and operation of computer platforms and object oriented computing environments including that of an object manager, are well known to those having skill in the art and are described, for example, in U.S. Patent No. 5,265,206 issued November 23, 1993 to Abraham, et al., entitled "A Messenger and Object Manager to Implement an Object Oriented Environment"; and U.S. Patent No. 5,161,225 to Abraham, et al., entitled "Persistent Stream for Processing Time Consuming and Reusable Queries in an Object Oriented Database Management System; U.S. Patent No. 5,151,987 to Abraham, et al., entitled "Recovery Objects in an Object Oriented Computing Environment"; and U.S. Patent No. 5,161,223 to Abraham, entitled "Resumeable Batch Query for Processing Time Consuming Queries in an Object Oriented Database Management System", the disclosures of which are hereby incorporated herein by reference, and in numerous textbooks such as Object Oriented Software Construction by Bertrand Meyer, published by Prentice Hall in 1988, the disclosure of which is incorporated herein by reference and the publication referred to above in the Background section.

Referring now to Figure 2, which is a reproduction of Figure 5 of U.S. Patent No. 5,313,629, the main components of an object oriented program (11, Figure 1) will be described. A detailed description of the design and operation of an object oriented program is provided in "Object Oriented Software Construction", by Bertrand Meyer, published by Prentice Hall in 1988, the disclosure of which is incorporated herein by reference.

Referring to Figure 2, a typical object oriented computing environment 11 includes three primary components: a Messenger 51, and Object Management Table 52 and a Loaded Classes Table 53. The Messenger 51 controls communication between calling and called messages, Object Management Table 52 and Loaded Classes Table 53. Object Management Table 52 contains a list of pointers to all active object instances. The Loaded Classes Table 53 contains a list of pointers to all methods of active object classes.

Operation of the Object Oriented Program 11 will now be described for the example illustrated in Figure 2, in which Methods A (block 54) of an object sends a message to method B (block 55) of an object. Method A sends a message to Method B by calling Messenger 51. The message contains (1) an object reference of the instance to receive the message, (2) the method the object instance is requested to perform on the data it encapsulates, and (3) any parameters needed by the receiving method. Messenger 51 obtains a pointer to the data frame 56 of the instance object specified by Method A, by searching Object Management Table 52 for the instance object. If the specified instance object cannot be found, Object Management Table 52 adds the instance object to the table and calls the instance to materialize its data from the database.

Once in the instance table, Object Management Table 52 returns the pointer to the materialized instance object.

Messenger 51 then obtains the address of Method B from the Loaded Classes Table 53. If the instance's class is not loaded, the Loaded Classes Table 53 will load it at this time to materialize its data. The Loaded Classes Table 53 searches for the specified method (Method B) and returns the address of the method to Messenger 51.

The Messenger 51 then calls Method B, passing it a system data area and the Parameters from the call made by Method A including the pointer. Method B accesses the data frame 56 using the pointer. Method B then returns control to the Messenger 51 which returns control to Method A.

Figure 3 illustrates an example of an inheritance hierarchy to an object oriented computing platform. As shown, three object classes are illustrated for "salesperson", "employee" and "person", where a salesperson is a "kind of" employee, which is a "kind of" person. In other words, salesperson is a subclass of employee and employee is the superclass of salesperson. Similarly, employee is the subclass of person and person is the superclass of employee. Each class shown includes three instances. B. Soutter, W. Tipp and B.G. Blue are salespersons. B. Abraham, K. Yates and R. Moore are employees. J. McEnroe, R. Nader and R. Reagan are persons. In other words, an instance is related to its class by an "is a" relation.

Each subclass "inherits" the frames and methods of its superclass. Thus, for example, a salesperson frame inherits

age and hire date objects from the employee's superclass as well as promote methods from the employee superclass. Salesperson also includes a unique quota attribute and a pay commission method. Each instance can access all methods and frames of its superclass, so that, for example, B.G Blue can be promoted.

The ATOMIC communication system is a location and protocol transparent object oriented communication system that implicitly encodes and decodes transferred data, if the connected peers reside on hosts with different internal data representation.

To that end, all communication endpoints (a/k/a peers) that use the same address - a character string (pattern) - are logically connected . The patterns are valid with the network segment the host is connected to. Different name spaces may be realized by using a name service for the pattern strings (e.g., by adding the host name and/or the process name to the pattern string).

The communication system provides one way communication between supplier and consumer peers.

COMMUNICATION MODES

The ATOMIC communication system supports two communication modes: an event propogation mode, which is preferred; and a classic client/server communication mode, which is known from RPC based communication toolkits.

Table 1 below summarizes a comparison of the event propogation and classic client/server communication modes

Event Propagation Modes m (suppliers) to n (consumers) Connections	PUSH Mode	Consumer Callback
	PULL Mode	Supplier Selection
Client/Server Communication Modes n (suppliers) to 1(consumer) Connections	Single Push without reply	
	Supplier with Callback and/or waitFor...() (... [REPLY [,Callback] [,SynchHandle]])	
	Consumer with Callback and/or waitFor...() (... [WAIT [,Callback] [,SynchHandle]])	

Table 1: Event Propogation and Client/Server Modes

Event Propogation Mode

In the event propogation mode one or more suppliers make events known to zero (0) or more consumers, which may be interested in this event by using the same pattern string as the supplier(s). Neither acknowledgments nor replies are supported in this mode because of the arbitrary number of consumers. This mode supports two transfer modes described next, the PUSH mode and the PULL mode.

The PUSH Mode

The PUSH mode - the most common event propogation mode - is a supplier triggered communication. The supplier of an event propagates an event that causes the delivery of a dataChanged() method (which is a callback function, action routine) - if enabled by the consumer - in the consumer context. It is up to the consumers whether to allow PUSH mode events to be queued (such that no event is lost) or not to be queued.

The Pull Mode

The PULL mode is a consumer triggered communication. The consumer fetches incoming events independently of the supplier's timing in propagating them. There is no queuing at the consumer's side because every consumer read request causes the communication system to get a copy of the latest version of the supplier's data. The internal handling depends on the queuing flag set (or not set) in the consumer's CsaRemote object. In case of queuing, a "getValue()" call blocks until the next data structure is provided by the supplier; if queuing is switched off, the "getValue()" call returns the contents of the last data structure that were sent by the selected supplier (if any, otherwise an error is reported).

To avoid multiple queries into the same receiver object as the result of a consumer read request, one supplier must be selected to get a unique object read.

Client/Server Communication Mode

The classic supplier triggered client/sever communication allows one or more clients (suppliers) to connect to one (and only one) server (consumer). This n-to-one relationship allows the server to send a reply back to the client on an incoming event (message), if this reply was requested by the client (supplier).

A significant add-on to the standard client/server communication, as known from, RPC is the consumer triggered client/server communication. Every event received at the consumer side is queued into the consumer's input queue and can be retrieved by calling the getValue() method (see description below) without getting any callback() routines dispatched. This feature allows the consumer to process a new event when appropriate without taking care of the restrictions that go along with asynchronous dispatching.

Location Transparency

The location of the communication partner (supplier as well as consumer) is fully transparent (i.e. as to whether it is located within the same process, on the same host, or on a remote host).

The ATOMIC communication system decides which protocol provides the best performance for the particular connection.

The user can specify a shared memory flag as an attribute to the constructors of the CsaConnectable (supplier) and CsaRemote (consumer) objects, and it is treated as a hint to the communication system.

ENVIRONMENT AND HOOKS

The Environment String

The ATOMIC communication system (Msc) transfers data together with additional header information containing the sender's peer address, the addressee's peer information, and an optional user specified environment string. The data type of the environment is defined in the header file CsaMscOptions.hh as follows:

```
const int theCsaMscEnvSize = 32;
typedef char CsaMscEnvType[theCsaMscEnvSize];
```

The environment string can be passed to sender/receiver methods (see CsaConnectable's setValue()/getValue() and CsaRemote's getValue()/dataChanged() descriptions below).

The semantics of the environment string are application specific and defined. The ATOMIC communication system passes the environment data without interpretation.

Adding and Removing Hook Routines

The ATOMIC communication system provides an interface to implement two hook routines, one at the supplier side that is called before the data are sent and one at the consumer side, that is called before the received data are stored in the target object. The hook routines are of type bool (i.e., boolean) and are called with one argument, the environment string. The hook routines are implemented once per process and are intended to be used by applications that modify/interpret implicitly the environment string (e.g. copy thread specific data into the environment string or store the environment string as thread specific data).

The value ("true" or "false") returned by the hook routines influences the data transfer. In that regard, the value "true" doesn't change the behavior while value "false":

- at the supplier side, aborts a setValue() call without sending the data to the consumer(s)

- at the consumer side, aborts a getValue() call without copying the data to the consumer(s) target object(s) and without dispatching/notifying the consumer.

These hook routines may be used for event filtering depending on (implicitly or explicitly specified) environment string contents.

The following sample code shows how the hook routines can be inserted, removed or changed. This sample code shows setting supplier and consumer hook routines :

```
// include options header file
#include        <CsaMscOptions.hh>
// the input (consumer) hook routine
static bool inHook (CsaMscEnvType & theEnv) {
    return (true);
}
// an alternate input (consumer) hook routine


static book inHook2 (CsaMscEnvType & theEnv) {
    return (true);
}
// the output (supplier) hook routine
static bool outHook (CsaMscEnvType & theEnv) {
    return (true);
}
CsaMscOptions theHooks = {inHook, outHook};
// set the hook routines
   CsaOsOptDb: :setOptions(CsaMscOptionName, (void *)&
      theHook);
   // read the hook routines
   CsaOsptDb: :getOptions(CsaMscOptionName, (void *) &
      theHooks);
   // modify and update the consumer hook routine
   theHooks.theInputHook = inHook2;
   CsaOsOptDb: :setOptions(CsaMscOptionName, (void *) &
      theHooks);
```

Building Classes and Structures

Some goals for the design of a communication are:

- the communication should be protocol transparent,

- the communication should be location transparent,
- the communication should be able to transfer all generic data types supported by the compiler,
- the application programmer should not have to deal with data representation details such as XDR routines
- the communication systems restrictions to the class design should be as few as possible.

To achieve these goals, two macros, discussed below, are provided to the class designer, which macros make the class transferrable by the communication system. These macros are referred to herein as the IMPLEMENT_MSC and DECLARE_MSC macros. The class definition must be identical for both the supplier and the consumer. Therefore, the same header file is included by both communication endpoints; changes of the header file do not cause inconsistencies because they are not done in different files.

The XDR encoding/decoding is performed internally by a communication subsystem (the IMPLEMENT_MSC macro must be present and specify all data members to be transferred), if the corresponding communication endpoint is located on a host with different internal data representation (different processor architecture).

The short component class example below shows how to use these macros in nested classes (structures are handled identically to classes; the DECLARE_MSC macro is inserted in the public (default) section of the structure):

```
const int theFloatDimension = 333;
/ /  user class example 1
class XyzSimpleClass {
     public:
          XyzSiimpleClass () {}
          -XyzSimpleClass () {}
          DECLARE_MSC(XyzSimpleClass)
     protected:
          int            aIntVar;
          float          aFloatArray[theFloaDimension];
};
IMPLEMENT_MSC(SyzSimpleClass,  V(aIntVar)  V(aFloatArray) )
/ /user class example 2
class AbcWithPointers {
     public:
          AbcWithPointers(XyzSimpleClass *thePointer=0):
               myPointer (thePointer)
               {   dsblDataChanged () ;  }
          -AbcWithPointers () {}
          bool dataChanged (CsaMscRcvdFrom from_in,
                            CsaMscEnvType &theEnv)
          {   return (true)  ;  }
```

```
        DECLARE_MSC(AbcWithPointers)
    protected:
        double              myDoubleVar;
        XyzSimpleClass      mySimpleClass;
        XyzSimpleClass      *myPointer;
};
IMPLEMENT_MSC(AbcWithPointers,  V(myDoubleVar)
              V(mySimpleClass)  P(myPointer)
```

There is no restriction in the number or size of the data members that are to be transferred. Some compilers-preprocessors, however, limit the size of macro expansions.

The DECLARE_MSC macro

The DECLARE_MSC macro makes the class accessible by a communication endpoint (CsaConnectable = supplier or CsaRemote = consumer) by declaring the inserter/extractor operators of the communication system's internal encoder/decoder class as friends, and implementing a few very short member functions (the enable/disable dataChanged() method), and one member function pointer (the dataChanged() method itself) into the class.

The DECLARE_MSC macro must be added to the public section of the class as it inserts the member function pointer into the protected section of the class and the member functions into the public section of the class.

The IMPLEMENT_MSC Macro

The IMPLEMENT_MSC macro defines the subset of data members that are to be transferred and tells the underlying system how to deal with pointers/vectors.

The IMPLEMENT_MSC macro must be placed after the class definition (it implements the inserter/extractor operators of the communication system's internal encoder/decoder class.

The IMPLEMENT_MSC macro has two arguments - the class name and a list of white space separated macros; one macro for each transferrable data member. The V(datamember) macro tells the communication system to treat the variable in the argument as a scalar or vector that is to be transferred.

The P(datamember) macro tells the communication system to dereference the pointer specified in the argument and transfer the contents of the class/structure/variable the pointer points to.

It should be noted that:

- All variable specification macros (e.g., V() and P() ...) build a white space separated list.
- The user classes may be derived from other classes. The data members of the base class must be specified in the IMPLEMENT_MSC macro of the derived class.
- Classes may be nested (container classes).
- The transfer is restricted to data members (no VMT's ...).

CsaConnectable (the supplier)

A CsaConnectable is the supplier class associated with a pattern string in order to transfer component classes (specified as templates) to consumer(s) associated with the same pattern string residing on local or remote hosts.

The class CsaConnectable is a template class and therefore can only exist in conjunction with a concrete component class.

A more detailed interface description is provided below and sample code is provided under the heading "Examples."

The Constructor

The constructor takes two arguments:

- a pattern string which specifies the name of the communication endpoint,
- an attribute mask (local/shared memory has to be used for message buffering)

The CsaConnectable establishes the connection to the underlying basic communication system and allocates a generic SESAM (reference should be made to Application Attorney Docket No. GR 96 P 3107, incorporated herein by reference) slot for event notification.

Data Transfer

Data transfer is initialized by a call to member function setValue(). The user object specified in the argument list contains the data to be transferred.

In most cases, the event propagation mode will be used. In this mode, only one argument must be supplied - a reference to the user class object that contains the data to be transferred.

Both, the PUSH mode and the PULL mode interface do not differ from the suppliers point of view. Reference should be made to Figure 4 wherein setValue() using event propogation or client/server communication without reply is illustrated.

In case of client/server communication, some more information must be passed to setValue(). Because only one server can be connected to the supplier, one of the existing consumers must be selected as the server. This can be performed by calling getConsumers(), selecting the appropriate consumer and passing the consumer informations (class CsaMscPeerInfo) as an argument to setValue.

In the client/server mode, a reply from the server (consumer) might be expected. If the reply argument is specified, the call to setValue() blocks until the reply is received. Reference should be made to Figure 5 wherein blocking of setValue() using client/server communication with reply is illustrated.

The last data set transferred through the CsaConnectable can be reread via getValue(). The getValue(), unlike the getValue() method of CsaRemote, never blocks because the requested data are already present (or not; in this case an error status will be returned). Therefore, not asynchrony is provided in the CsaConnectable's getValue() interface.

If blocking calls (client/server mode only) to setValue() are not acceptable, the setValue() method can be performed in a separate thread. This is done by implicitly using the SESAM's dynamic slot mechanism. The synchronisation (again, reference should be made to Application Attorney Docket No. GR 96 P 3107 E for a more detailed description of these aspects of SESAM) can be realized in two different ways - waiting for a SynchHandle (returned by setValue()) (see Figure 6 illustrating nonblocking setValue() using client/server communication with reply - waitFor...() and/or getting a callback method (must be passed to setValue()) dispatched after completion of setValue() (see Figure 7 illustrating nonblocking setValue() using client/server communication with reply -callback.

It should be noted that asynchronous setValue() calls are only supported if a reply was requested.

In the constructor of CsaConnectable, a generic SESAM slot is allocated, and the SynchHandle associated with this slot is stored as a CsaConnectable's private data. This SynchHandle - in this context called notification handle - can be obtained by calling the method getNotificationHandle(). This handle can be used for example in watchdog threads that keep track of replies that are initiated by setValue() calls of other threads without knowledge of the setValue()'s arguments.

Data Processing

The data members of the user class object are copied by an i/o stream-like encoder/decoder into a message buffer, which is passed to the underlying communication system. The CsaConnectable holds always the latest message buffer for subsequent getValue() calls and to grant requests from a PULL mode consumer. There is no 1 to 1 relationship between this message buffer in the output queue and a specific user class object, if more than one object has been transferred through this CsaConnectable by one or more threads.

Design Restrictions

CsaConnectables (suppliers) may be located on a stack, allocated from a heap or stored in a global address space. CsaConnectables in shared memory are not supported.

There must not be classes derived from class CsaConnectable. Containment can be used instead.

There are no restrictions on the lifetime of the CsaConnectable.

Ex. 1002 188/597

CsaRemote (Consumer)

CsaRemote is the consumer class associated with a pattern string in order to receive component classes (specified as templates) in PUSH mode or PULL mode from supplier(s) associated with the same pattern string residing on local or remote hosts.

The class CsaRemote is a template class and therefore can only exist in conjunction with a concrete component class.

The Constructor

The constructor takes two arguments: a pattern string which specifies the name of the communication endpoint; and an attribute mask specifying:

a) whether a shared/local memory has to be used for message buffering,
b) whether or not an incoming message must be queued, and
c) the CsaRemote (consumer) to select the PUSH/PULL mode.

The CsaRemote establishes the connection to the underlying basic communication system and allocates a generic SESAM (see SESAM API description, copending Application Attorney Docket No. GR 96 P 3107 E) slot for event notification.

Data Transfer

For the consumer side there are two modes of operation, the event propagation containing the PUSH and PULL modes as well as the client/server communication (supplier and consumer triggered).

The supplier triggered modes - event propagation PUSH mode and the client/server mode - are very similar from the consumer's point of view; the only difference is the reply that will be returned to the supplier (if requested) in client/server mode. Common to both modes is the dispatching scheme and the blocking/nonblocking getValue() (receive) calls.

Consumer triggered mode - event propagation PULL mode - is different from the supplier triggered mode in copying the last data set (that will always be kept by the supplier) by every call to getValue() - regardless whether the supplier's data changed or didn't change between two calls to getValue().

Data Filter Method dataChanged

The DECLARE_MSC macro adds a data filtering and event dispatching mechanism to the user's component class.

The designer of the user component class can add a method (in this document always named dataChanged()) to his class, that can be enabled or disabled at runtime. This method is - if enabled - implicitly called after copying the received data into the target object - regardless whether the data are received by a synchronous/asynchronous call to getValue() or by enabling the dispatching with setCallbackObject(). In the latter case, the action routine that will get dispatched is the dataChanged() member function. There are two arguments passed to the dataChanged() method, a mask of type CsaMscRcvdFrom which specifies the location of the sender (same thread, same process but different thread, other process on same host or process on a remote host) (see SESAM API description) and the environment string.

In client/server mode, the return value of dataChanged() is returned to the supplier (client) together with the thread specific error object, if a reply was requested.

The great advantage of dispatching a member function of the user class is the accessibility of all data members by the dispatched function.

The dataChanged() method is enabled by invoking the user class method:

```
void enblDataChanged(
bool (userclass::*f)(CsaMscRcvdFrom,
                     CsaMscEnvType &
     )
);
```

The dataChanged() method is disabled by invoking the user class method void dsblDataChanged(void).

Both methods are implemented by the macro DECLARE_MSC.

It should be noted that the dataChanged() method always should explicitly disabled or enabled in the constructor of the user class to avoid uninitialized member function pointer. Toggling between enabled and disabled state is possible at runtime.

Supplier Triggered Event Processing

The most simple case is just calling getValue() with one argument, the reference to a user object as the receiver buffer without enabling the dataChanged() method.

The object getValue() blocks until data are available for reading. Reference should be made to Figure 8 which illustrates blocking getValue without dataChanged enabled.

If the dataChanged() method is implemented and enabled, it is invoked after reading the incoming data and before returning to the caller of getValue(). Reference should be made to Figure 9 which illustrates blocking getValue with dataChanged enabled.

In client/server mode, the supplier may request a reply. If no dataChanged() method is implemented and enabled, the reply will be delivered with and have the status of "success" after copying the incoming data into the target object. In that regard, reference should be made to Figure 10 which illustrates sending a reply without dataChanged() enabled. If the dataChanged() method is implemented and enabled, the reply will be delivered after return from dataChanged() passing the return status and, if dataChanged() returned 'false', the thread specific error object back to the supplier. In that regard, reference should be made to Figure 11 which illustrates sending a reply with dataChanged() enabled.

As described for CsaConnectable, the blocking invocation can be performed in a separate thread implicitly using SESAM's dynamic slot mechanism. The synchronization (see detailed description in commonly assigned and copending application Attorney Docket No. GR 96 P 3107 E) can be realized in two different ways - waiting for a SynchHandle (returned by getValue()) (see Figure 12 which illustrates nonblocking getValue() using waitForMultipleObjects) and/or getting a call-back method (must also be passed to setValue ()) dispatched after completion of setValue() (see Figure 13 which illustrates nonblocking getValue() using a callback function).

Many applications are event driven or have more than one input event to wait for. These applications cannot block in a single getValue(); they need to get dispatched after arrival of data in one or more CsaRemote objects. This applications can declare an object as the receiver object for the specified CsaRemote object using the dataChanged() method as the callback method. The dataChanged() method is dispatched from the main dispatcher as long as the input queue contains unread data, similar to the RPC action routine (see Figure 14 which illustrates dispatching dataChanged() to handle incoming data). At invocation time of dataChanged() the data are already stored in the specified object. Reply handling is similar as described for getValue() calls with dataChanged() enabled.

It should be noted that the dataChanged() method must be enabled before invoking setCallbackObject().

After enabling the dataChanged() method as the dispatcher for incoming events, no further getValue() calls are possible for this CsaRemote object.

In some cases it may be of interest to be notified every time data on one or more CsaRemote objects arrive. The application process then would call the method waitForMultipleObjects() on the notification handle(s) of the CsaRemote object(s) of interest and invoke for every signaled CsaRemote object the getValue() method with the flag "NOWAIT", as long as data are available.

Consumer Triggered Event Processing

In event propagation PULL mode, the consumer triggers the receiving of messages from supplier(s). To get only one data set for the pull request, one specific supplier must be selected. The selection is done by calling the method getSuppliers(), selecting one of the suppliers and calling the method getValue() for the selected supplier.

The CsaRemote class provides two different ways of pulling data from the consumer - request a data set regardless if it was yet read by a previous call to getValue() (by calling getValue() with the flag "NOWAIT") or request a new version of the data set (by calling getValue() with the flag "WAIT" which means wait for a new update by the supplier) (see Figure 15 which illustrates blocking PULL mode getValue() using the NOWAIT flag).

In the latter case the request for a new update is queued at the supplier's CsaConnectable until the next setValue(). This set Value() causes all queued requests to be granted, regardless if they are queued by one or more CsaRemotes (i.e. if more than one request from one CsaRemote is pending at the same CsaConnectable, the setValue() method grants all requests!).

The asynchronous functionality - passing the getValue() invocation to SESAM's dynamic slots and waiting for completion and/or forcing a callback function to be dispatched, respectively - is similar to that of the PUSH mode1.

The dispatching of the dataChanged() method enabled by a previous call to setCallbackObject() is slightly different by means of initiator of the callback. In PULL mode the dataChanged is dispatched due to the supplier's response on a consumer's getvalue() call (see Figure 13 which illustrates dispatching datachanged() to handle pulled data).

Replies in Client/Server mode

As described above, replies are possible in client/server mode only. For the processing of replies, see Table 2 below. In Table 2, the entry of an "X" means "not of concern."

PULL mode	QUEUED	setCallback -Object()	Reply - Behavior
NO	NO	NO	Implicit reply after the message is stored in the input message queue. The input queue has the length of 1 message.
NO	NO	YES[b]	see above
NO	YES[c]	NO [1)]	Get_value() calls the dataChanged() method, wich returns an error status passed as a reply status to the supplier. Each message can trigger one reply.
NO	YES [3)]	YES [2)]	The return status of the dataChanged() method is passed to the supplier of the message as a reply status (implicitly)
YES	X	X	No reply possible

Notes: (1) Consumer triggered event event processing.
(2) Supplier triggered event event processing.
(3) If the queue is full, the supplier will block until the consumer dequeues at least one event.

Table 2: Reply Behavior

Data Processing

All incoming data are queued into the input queue of the consumer. In the case of PUSH mode consumers that specify the attribute "NOTQUEUED" to the constructor, the input queue has a maximum length of 1 message buffer, which will be overwritten by a new incoming event.

The data members of the user class object are copied by an i/o stream-like encoder/decoder from a message buffer, which is queued to the input queue of the CsaRemote, to the user class object.

There is no 1 to 1 relationship between this message buffer in the output queue and a user class object, if more than one object has been transferred through this CsaRemote.

Design Restrictions

CsaRemote objects (consumers) may be located on a stack, allocated from a heap or stored in a global address space. CsaRemotes in shared memory are not supported.

There must be no classes derived from class CsaRemote. Instead, one must use containment.

There are no restrictions on the lifetime of a CsaRemote object.

The user class object's lifetime must not be less than the lifetime of the CsaRemote.

In summary, the principal new approach of the invention is the novel and inventive combination of all the following features within a single homogenous package:

object oriented
supports external data representation without the need of an Interface Definition Language
Event-Propagation for Push&Pull-Modes
Client-Server Communication with reply
full asynchronous Support
multithreaded and multithreadsafe
Layering between Application-View and Implementation-View
transparency of locations and protocols and according optimizations
use of a server process for pattern-management only in the registration phase, but never in the Transport phase
a fully distributed (with local optimizations) event propagation mechanism, so no further event propagation mechanism is necessary throughout a software system.

Examples

The following examples illustrate typical usages of CsaConnectable (supplier) and CsaRemote (consumer) objects. Both, the supplier and the consumer, use the same header file with class definitions.

Ex. 1002 192/597

The Header File

```
const int theFloatDimension = 333;
// user class example 1
class XyzSimpleClass {
public:
     XyzSimpleClass(){}
     ~XyzSimpleClass(){}
     DECLARE_MSC(XyzSimpleClass)
protected:
     int        aIntVar;
     float      aFloatArray[theFloatDimension];
};
IMPLEMENT_MSC(XyzSimpleClass, V(aIntVar) V(aFloatArray))
//user class example 2
class AbcWithPointers {
     public:
AbcWithPointers(XyzSimpleClass *thePointer=0):
                    myPointer(thePointer)
     { dsblDataChanged(); } ~AbcWithPointers(){}
bool dataChanged(CsaMscRcvdFrom from_in,
                         CsaMscEnvType &theEnv)
{ return(true); } DECLARE_MSC(AbcWithPointers)
     protected:
          double    myDoubleVar;
XyzSimpleClass  mySimpleClass; XyzSimpleClass  *myPointer;
};
IMPLEMENT_MSC(AbcWithPointers, V(myDoubleVar)
V(mySimpleClass)
P(myPointer))
```

The Supplier Program

```
#include  <CsaConnectable.hh>   // communication classes
#include  <user.hh>             // user class(es)
// Callback function that notifies the completion of a
// blocking call to setValue() with reply
void * callbackFunc(void *){
          return ((void *) 0);
}
/*
 * The main program
 */
main(int argc, char **argv)
{
XyzSimpleClass   sc1;    // a simple user class
    AbcWithPointers wp1(&sc1); // a
container user class CsaMscPeerInfo peers;   // information
    about consumers
      bool     status;   // return status for method calls
CsaSesam::SynchHandleType Synch; // SESAM's synchronization
                                                 // handle
// Event Propagation (PUSH mode)
CsaConnectable <AbcWithPointers> con1 ("push_mode_conn");
status = con1.setValue(wp1);
// Event Propagation (PULL mode)
CsaConnectable <AbcWithPointers> con2 ("pull_mode_conn");
status = con2.setValue(wp1);
// Client/Server mode (no reply, synchronous completion) Csa-
Connectable
<AbcWithPointers> con3 ("clsv_mode_conn"); status =
con3.getConsumers(&peers);
for ( peers.reset(); peers++ ; ) {
  // ... select appropriate consumer
  break;
}
status = con3.setValue(wp1, &peers);
// Client/Server mode (reply, synchronous completion)
```

```
status = con3.setValue(wp1, &peers, CsaMscPeer::Reply);
// Client/Server mode (reply, callback function)
status = con3.setValue(wp1, &peers, CsaMscPeer::Reply,
                                    callbackFunc);
// Client/Server mode (reply, wait for completion)
status = con3.setValue(wp1, &peers, CsaMscPeer::Reply,
                                    0, &Synch);
// some code ...
// AFM's WaitForMultipleObjects(1,&Synch,LOG_AND,60000);
return 0;
}
```

The Consumer Program

```
#include  <CsaRemote.hh>    // communication classes
          #include<user.hh>
     // user class(es)

// A allback function that notifies the asynchronous comple-
tion
// of a call to getValue().
void * callbackFunc(void *){
  return ((void *) 0);
}
/*
 * The main program
 */
main(int argc, char **argv)
{
CsaMscPeerInfo   peers;     // information about consumers
CsaSesam::SynchHandleType Synch; // SESAM's synchronization
                                                 // handle
bool      status;   // return status of method calls
/*
* Event Propagation (PULL mode)
*/
```

```
CsaRemote <AbcWithPointers> rem1("pull_mode_conn",
                                    CsaMscPeer::PullMode);
XyzSimpleClass    sc1;   // a simple user class AbcWith-
    Pointers      wp1(&sc1); // a
container class
// first select a supplier
status = rem1.getSuppliers(&peers);
for ( peers.reset(); peers++ ; ) {
  // ... select appropriate supplier
  break;
}
// enable the dataChanged method
wp1.enblDataChanged(AbcWithPointers::dataChanged);
// get data using synchronous getValue() call
while (1) {
  status = rem1.getValue(wp1, &peers);
  // ... do something
}
// get data using asynchronous getValue() call
status = rem1.getValue(wp1, &peers, CsaMscPeer::Wait,
                                    callbackFunc);
while (1) {
status = rem1.getValue(wp1, &peers, CsaMscPeer::Wait,
                                    0, &Synch);
     // ... do something
     // SESAM's  WaitForMultipleOb-
jects(1,&Synch,LOG_AND,60000);
}
     /*
     * Event propagation - PUSH model
     */
CsaRemote <AbcWithPointers> rem2("pull_mode_conn",
     CsaMscPeer::PushMode);
XyzSimpleClass sc2; // a simple user class AbcWithPointers
     wp2(&sc2); // a
container user class
// Enable the dataChanged method
```

```
wp2.enblDataChanged(AbcWithPointers::dataChanged);
// First get some data using synchronous getValue() call
status = rem2.getValue(wp2);
// Now let dataChanged method be dispatched on every
// incoming event. From now on every getValue() call
// on this Remote will be rejected.
status = rem2.setCallbackObject(wp2);
// call an appropriate main loop
*/
  * Client/server communication
  */
CsaRemote <AbcWithPointers> rem3("clsv_mode_conn",
                                 CsaMscPeer::PushMode);
XyzSimpleClass   sc3;    // a simple user class
AbcWithPointers     wp3(&sc3); // a container user class
// Enable the dataChanged method
wp3.enblDataChanged(AbcWithPointers::dataChanged);
// First get some data using synchronous getValue() call
status = rem3.getValue(wp3);
// Now let dataChanged method be dispatched on every
// incoming event. From now on every getValue() call
// on this Remote will be rejected.
status = rem3.setCallbackObject(wp3);
// call an appropriate main loop
}
```

Although modifications and changes may be suggested by those skilled in the art, it is the intention of the inventors to embody within the patent warranted hereon all changes and modifications as reasonably and properly come within the scope of their contribution to the art.

Claims

1. An object oriented communication system on a computer platform, comprising:

   means for supporting external data representation without an interface definition language;
   means for propagating events in both push and pull communication modes and selecting which mode is used for a given connection;
   means for distributing events; and
   means for server processing pattern management.

2. The object oriented communication system according to claim 1, wherein the means for supporting external data representation without an interface definition language comprises means for implicitly coding and decoding trans-

ferred data.

3. The object oriented communication system according to claim 1 or 2, wherein all communication end points that use the same address are logically connected.

4. The object oriented communication system according to claim 1 to 3, wherein there is provided a hook routine which called at the supplier side before data is sent and a hook routine which is called before data is stored in a target object, both hook routines called with an environment string as an argument, both hook routines influencing data transfer.

5. The object oriented computing system programmer interface according to claim 1 to 4, further comprising means for performing XDR encoding and decoding.

6. The object oriented communication system according to claim 1 to 5, further comprising a macro routine which makes a class accessible to a communication endpoint.

7. The object oriented communication system according to claim 6, wherein the macro routine makes the class accessible via the communication end point by declaring inserter and extractor operators of the communication systems internal encoder/decoder class as friends, and implementing short member functions and one member function pointer into the class.

8. The object oriented communication system according to claim 1 to 7, further comprising a macro routine which defines a subset of data members that are to be transferred and informs the underlying system as to how to deal with pointers and vectors.

9. The object oriented communication system according to claim 8, wherein the macro routine has two arguments, a class name and a list of white space separated macro routines, one such macro routine for each transferrable data member.

10. The object oriented communication system according to claim 1 to 9, comprising a supplier class associated with a pattern string in order to transfer component classes to consumers associated with the same pattern string residing on a host.

11. The object oriented communication system according to claim 10, wherein the supplier class is a template class and can only exist in conjunction with a concrete component class.

12. The object oriented communication system according to claim 1 to 11, further comprising a consumer class associated with a pattern string in order to receive component classes in PUSH mode or PULL mode from suppliers associated with the same pattern string residing on hosts.

13. The object oriented communication system according to claim 12, wherein the consumer class is a template class and can only exist in conjunction with a concrete component class.

14. An object oriented communication system programmer interface on a computer platform, comprising:

    a first macro routine which makes a class accessible to a communication endpoint by declaring inserter and extractor operators of a communication systems internal encoder/decoder class as friends and implementing short member functions and one member function pointer into the class; and
    a second macro routine which defines a subset of data members that are to be transferred and informs the underlying system as to how to deal with pointers and vectors, a second macro routine having two arguments, a class name and a list of white space separated macro routines, one such white space separate macro routine for each transferrable data member.

15. The object oriented communication system programmer interface according to claim 14, comprising a supplier class associated with a pattern string in order to transfer component classes to consumers associated with the same pattern string residing on a host.

16. The object oriented communication system programmer interface according to claim 14 or 15, wherein the supplier

class is a template class and can only exist in conjunction with a concrete component class.

17. The object oriented communication system programmer interface according to claim 14 to 16, further comprising a consumer class associated with a pattern string in order to receive component classes in PUSH mode or PULL mode from suppliers associated with the same pattern string residing on hosts.

18. The object oriented communication system programmer interface according to claim 14 to 17, wherein the consumer class is a template class and can only exist in conjunction with a concrete component class.

19. A storage medium including object oriented code for an object oriented communication system on a computer platform, comprising:

means for supporting external data representation without an interface definition language;
means for propagating events in both push and pull communication modes and selecting which mode is used for a given connection;
means for distributing events; and
means for server processing pattern management.

20. The storage medium according to claim 19, wherein the means for supporting external data representation without an interface definition language comprises means for implicitly coding and decoding transferred data.

21. The storage medium according to claim 19 or 20, wherein all communication end points that use the same address are logically connected.

22. The storage medium according to claim 19 to 21, wherein there is provided a hook routine which called at the supplier side before data is sent and a hook routine which is called before data is stored in a target object, both hook routines called with an environment string as an argument, both hook routines influencing data transfer.

23. The storage medium according to claim 19 to 22, further comprising means for performing XDR encoding and decoding.

24. The storage medium according to claim 19 to 23, further comprising a macro routine which makes a class accessible to a communication endpoint.

25. The storage medium according to claim 24, wherein the macro routine makes the class accessible via the communication end point by declaring inserter and extractor operators of the communication systems internal encoder/decoder class as friends, and implementing short member functions and one member function pointer into the class.

26. The storage medium according to claim 19 to 25, further comprising a macro routine which defines a subset of data members that are to be transferred and informs the underlying system as to how to deal with pointers and vectors.

27. The storage medium according to claim 26, wherein the macro routine has two arguments, a class name and a list of white space separated macro routines, one such macro routine for each transferrable data member.

28. The storage medium according to claim 19 to 27, comprising a supplier class associated with a pattern string in order to transfer component classes to consumers associated with the same pattern string residing on a host.

29. The storage medium according to claim 28, wherein the supplier class is a template class and can only exist in conjunction with a concrete component class.

30. The storage medium according to claim 19 to 29, further comprising a consumer class associated with a pattern string in order to receive component classes in PUSH mode or PULL mode from suppliers associated with the same pattern string residing on hosts.

31. The storage medium according to claim 30, wherein the consumer class is a template class and can only exist in conjunction with a concrete component class.

Ex. 1002 199/597

32. A storage medium including object oriented code for an object oriented communication system on a computer platform, comprising:

a first macro routine which makes a class accessible to a communication endpoint by declaring inserter and extractor operators of a communication systems internal encoder/decoder class as friends and implementing short member functions and one member function pointer into the class; and
a second macro routine which defines a subset of data members that are to be transferred and informs the underlying system as to how to deal with pointers and vectors, a second macro routine having two arguments, a class name and a list of white space separated macro routines, one such white space separate macro routine for each transferrable data member.

33. The object oriented communication system programmer interface according to claim 32, comprising a supplier class associated with a pattern string in order to transfer component classes to consumers associated with the same pattern string residing on a host.

34. The storage medium according to claim 33, wherein the supplier class is a template class and can only exist in conjunction with a concrete component class.

35. The storage medium according to claim 33 or 34, further comprising a consumer class associated with a pattern string in order to receive component classes in PUSH mode or PULL mode from suppliers associated with the same pattern string residing on hosts.

36. The storage medium according to claim 33 to 35, wherein the consumer class is a template class and can only exist in conjunction with a concrete component class.

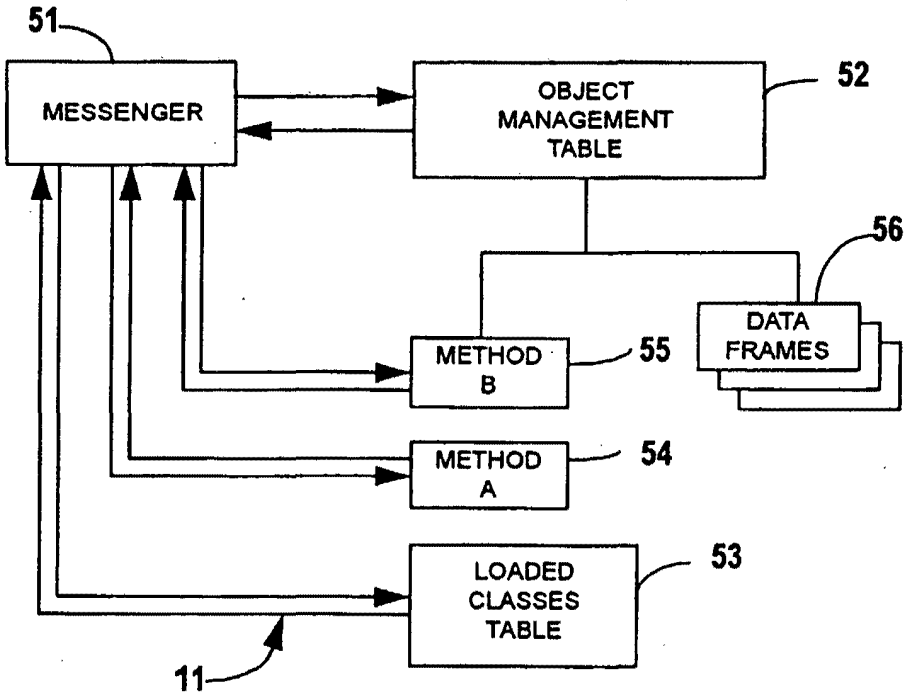

FIG 1

Ex. 1002 201/597

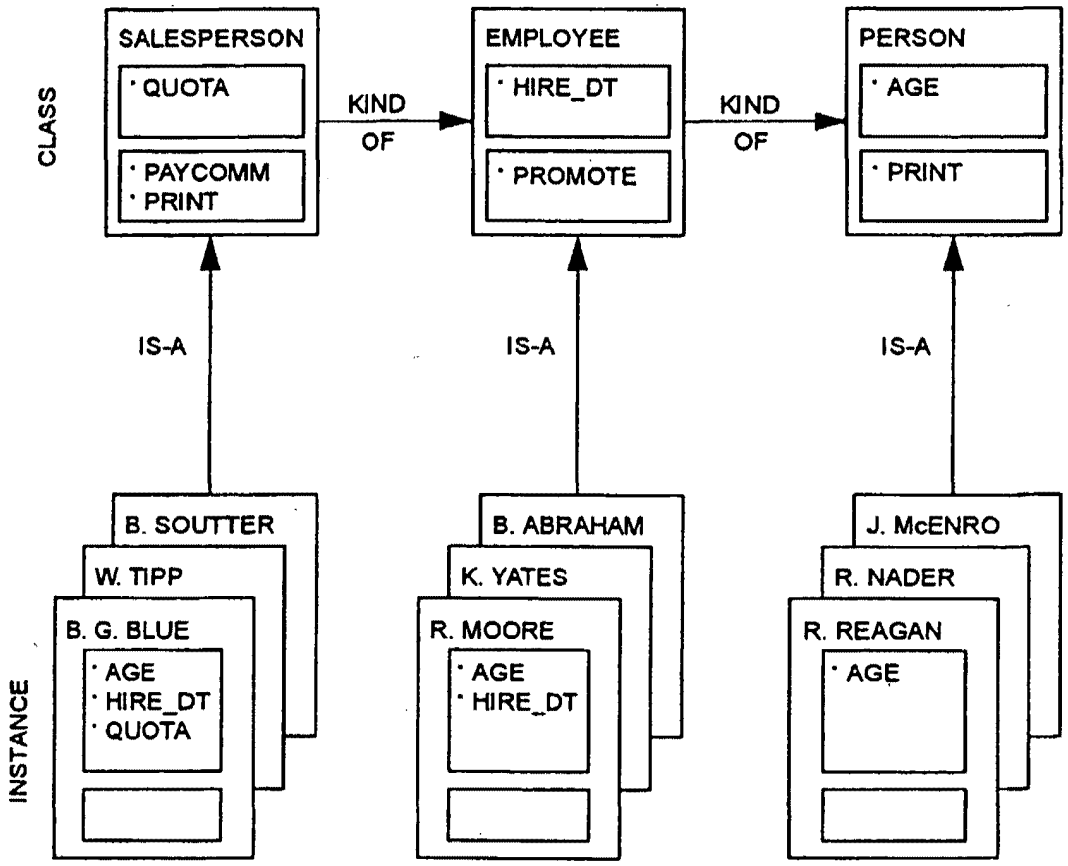

FIG 2

Ex. 1002 202/597

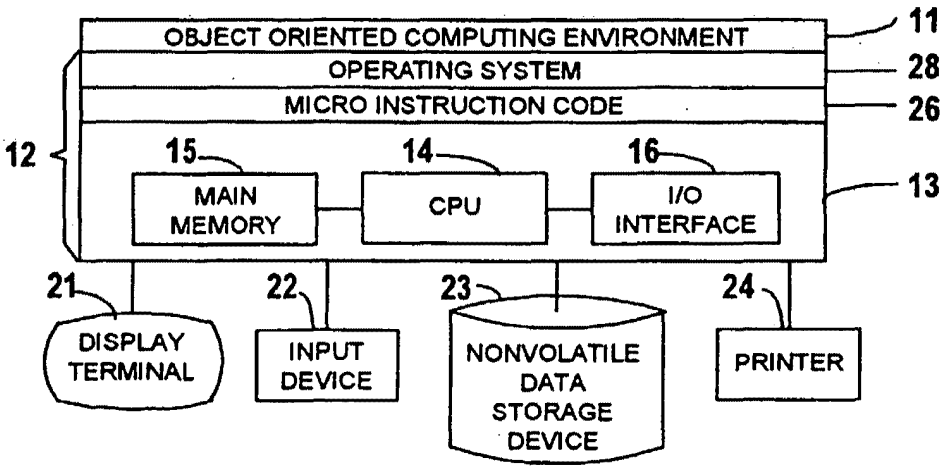

FIG 3

Ex. 1002 203/597

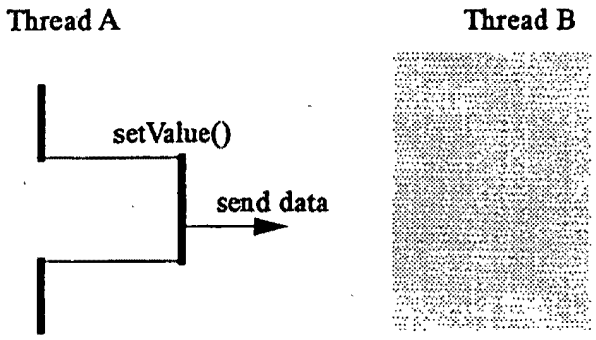
Thread A
Thread B
setValue()
send data

FIG 4

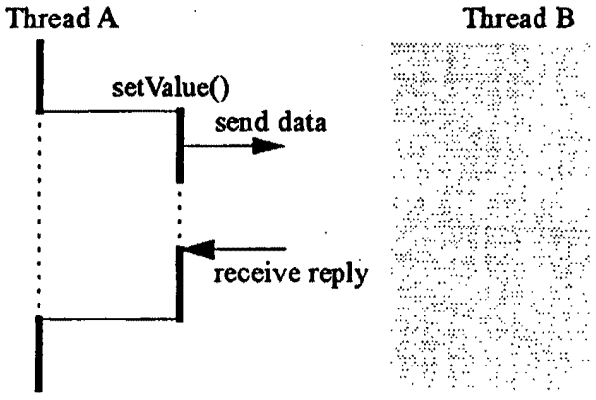
Thread A
Thread B
setValue()
send data
receive reply

FIG 5

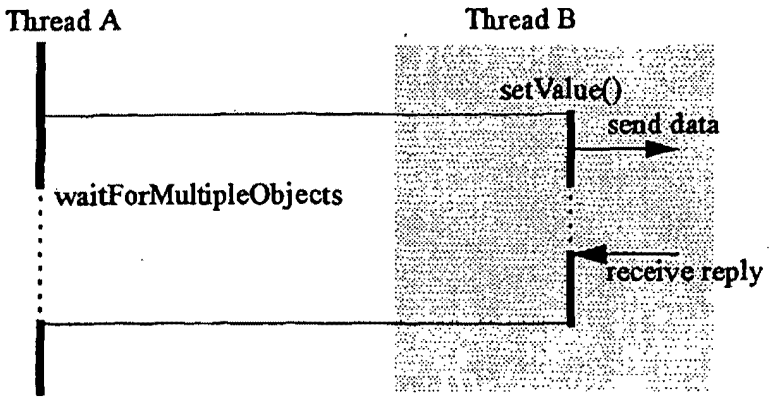
Thread A
Thread B
setValue()
send data
waitForMultipleObjects
receive reply

FIG 6

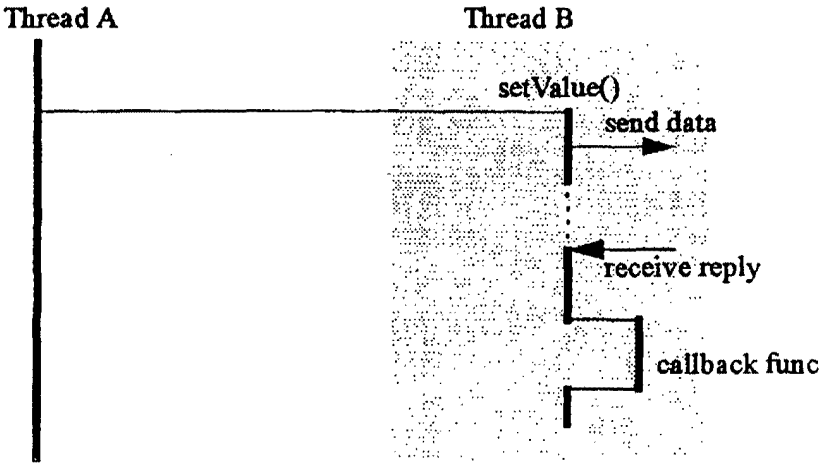
Thread A
Thread B
setValue()
send data
receive reply
callback func

FIG 7

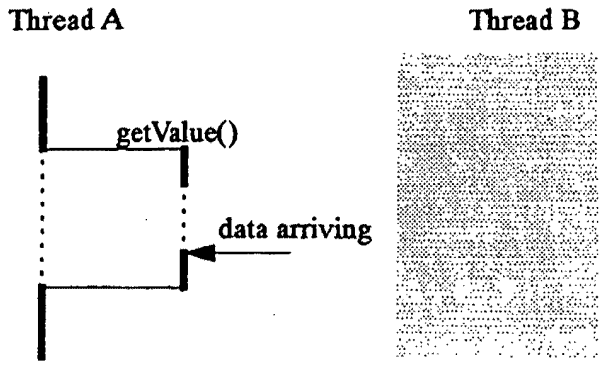
Thread A
Thread B
getValue()
data arriving

FIG 8

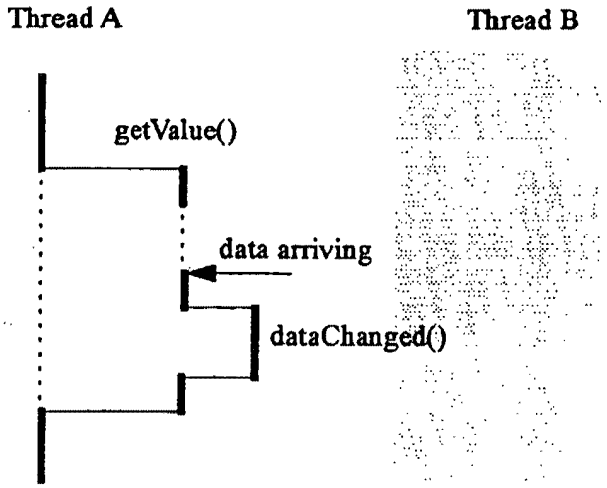
Thread A
Thread B
getValue()
data arriving
dataChanged()

FIG 9

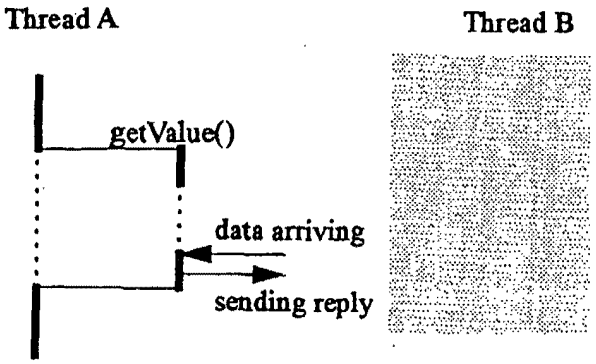
Thread A
Thread B
getValue()
data arriving
sending reply

FIG 10

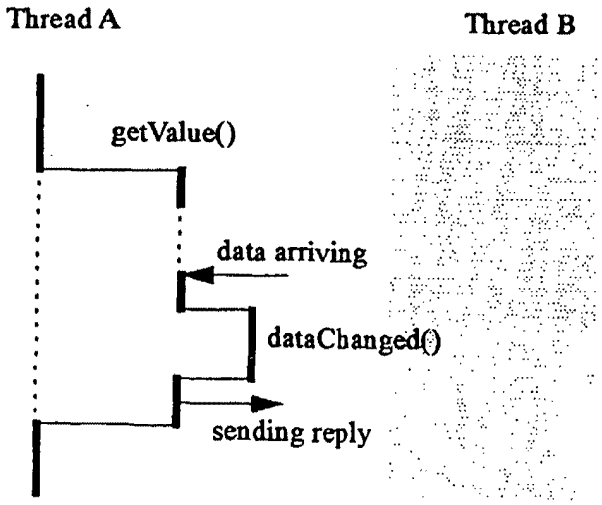
Thread A
Thread B
getValue()
data arriving
dataChanged()
sending reply

FIG 11

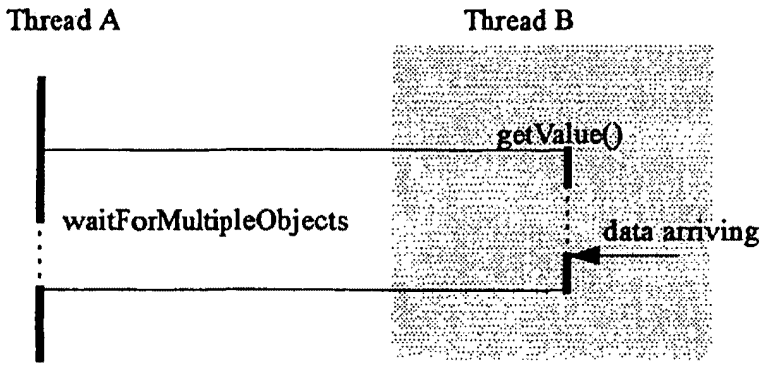
Thread A
Thread B
getValue()
waitForMultipleObjects
data arriving

FIG 12

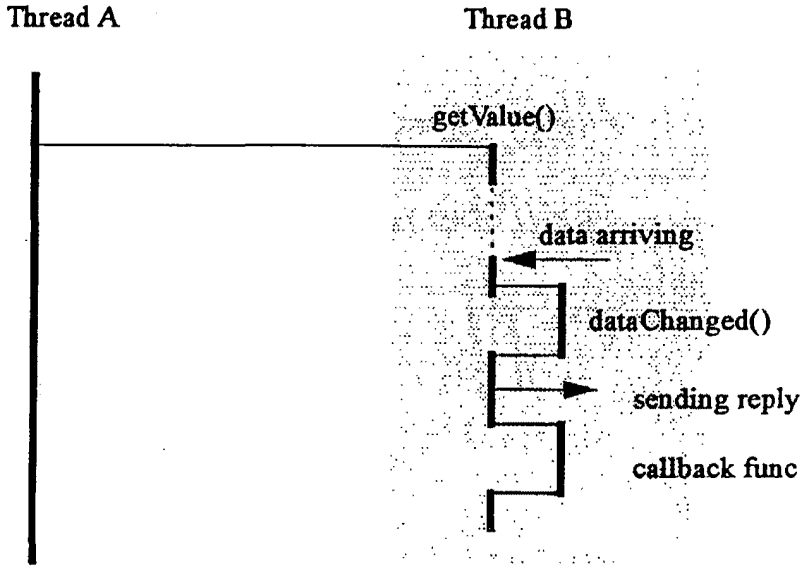
Thread A
Thread B
getValue()
data arriving
dataChanged()
sending reply
callback func

FIG 13

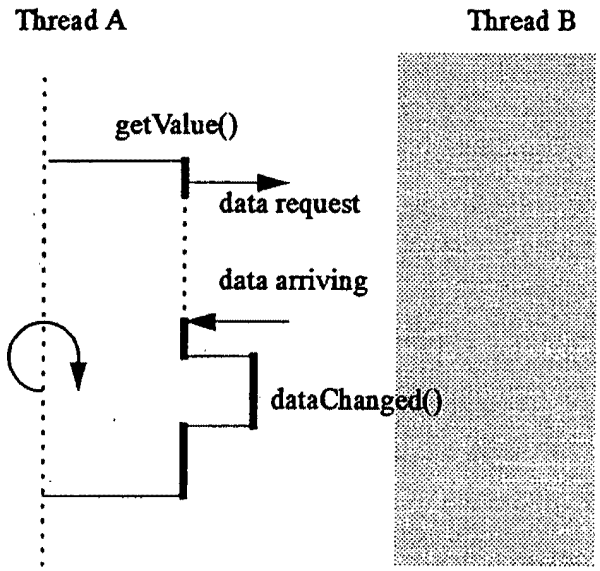
Thread A
Thread B
getValue()
data request
data arriving
dataChanged()

FIG 16

This Page is Inserted by IFW Indexing and Scanning Operations and is not part of the Official Record

BEST AVAILABLE IMAGES

Defective images within this document are accurate representations of the original documents submitted by the applicant.

Defects in the images include but are not limited to the items checked:

- ☐ BLACK BORDERS
- ☐ IMAGE CUT OFF AT TOP, BOTTOM OR SIDES
- ☐ FADED TEXT OR DRAWING
- ☐ BLURRED OR ILLEGIBLE TEXT OR DRAWING
- ☐ SKEWED/SLANTED IMAGES
- ☐ COLOR OR BLACK AND WHITE PHOTOGRAPHS
- ☑ GRAY SCALE DOCUMENTS
- ☐ LINES OR MARKS ON ORIGINAL DOCUMENT
- ☐ REFERENCE(S) OR EXHIBIT(S) SUBMITTED ARE POOR QUALITY
- ☐ OTHER: _____

IMAGES ARE BEST AVAILABLE COPY.

As rescanning these documents will not correct the image problems checked, please do not report these problems to the IFW Image Problem Mailbox.

UNITED STATES PATENT AND TRADEMARK OFFICE

UNITED STATES DEPARTMENT OF COMMERCE
United States Patent and Trademark Office
Address: COMMISSIONER FOR PATENTS
P.O. Box 1450
Alexandria, Virginia 22313-1450
www.uspto.gov

APPLICATION NO.	FILING DATE	FIRST NAMED INVENTOR	ATTORNEY DOCKET NO.	CONFIRMATION NO.
09/810,514	03/15/2001	David Chao	85160.924/T00071	6193

33438 7590 01/12/2005

HAMILTON & TERRILE, LLP
P.O. BOX 203518
AUSTIN, TX 78720

EXAMINER	
RUDY, ANDREW J	
ART UNIT	**PAPER NUMBER**
3627	

DATE MAILED: 01/12/2005

Please find below and/or attached an Office communication concerning this application or proceeding.

Office Action Summary	Application No.	Applicant(s)	
	09/810,514	CHAO ET AL.	
	Examiner	Art Unit	
	Andrew Joseph Rudy	3627	

-- The MAILING DATE of this communication appears on the cover sheet with the correspondence address --

Period for Reply

A SHORTENED STATUTORY PERIOD FOR REPLY IS SET TO EXPIRE 3 MONTH(S) FROM THE MAILING DATE OF THIS COMMUNICATION.

- Extensions of time may be available under the provisions of 37 CFR 1.136(a). In no event, however, may a reply be timely filed after SIX (6) MONTHS from the mailing date of this communication.
- If the period for reply specified above is less than thirty (30) days, a reply within the statutory minimum of thirty (30) days will be considered timely.
- If NO period for reply is specified above, the maximum statutory period will apply and will expire SIX (6) MONTHS from the mailing date of this communication.
- Failure to reply within the set or extended period for reply will, by statute, cause the application to become ABANDONED (35 U.S.C. § 133). Any reply received by the Office later than three months after the mailing date of this communication, even if timely filed, may reduce any earned patent term adjustment. See 37 CFR 1.704(b).

Status

1)☒ Responsive to communication(s) filed on *26 October & 22 November 2004*.

2a)☐ This action is **FINAL**. 2b)☒ This action is non-final.

3)☐ Since this application is in condition for allowance except for formal matters, prosecution as to the merits is closed in accordance with the practice under *Ex parte Quayle*, 1935 C.D. 11, 453 O.G. 213.

Disposition of Claims

4)☒ Claim(s) *1-64* is/are pending in the application.

4a) Of the above claim(s) *43-64* is/are withdrawn from consideration.

5)☐ Claim(s) _____ is/are allowed.

6)☒ Claim(s) *1-42* is/are rejected.

7)☐ Claim(s) _____ is/are objected to.

8)☐ Claim(s) _____ are subject to restriction and/or election requirement.

Application Papers

9)☐ The specification is objected to by the Examiner.

10)☐ The drawing(s) filed on _____ is/are: a)☐ accepted or b)☐ objected to by the Examiner.

Applicant may not request that any objection to the drawing(s) be held in abeyance. See 37 CFR 1.85(a).

Replacement drawing sheet(s) including the correction is required if the drawing(s) is objected to. See 37 CFR 1.121(d).

11)☐ The oath or declaration is objected to by the Examiner. Note the attached Office Action or form PTO-152.

Priority under 35 U.S.C. § 119

12)☐ Acknowledgment is made of a claim for foreign priority under 35 U.S.C. § 119(a)-(d) or (f).

a)☐ All b)☐ Some * c)☐ None of:

1.☐ Certified copies of the priority documents have been received.

2.☐ Certified copies of the priority documents have been received in Application No. _____.

3.☐ Copies of the certified copies of the priority documents have been received in this National Stage application from the International Bureau (PCT Rule 17.2(a)).

* See the attached detailed Office action for a list of the certified copies not received.

Attachment(s)

1) ☒ Notice of References Cited (PTO-892)
2) ☐ Notice of Draftsperson's Patent Drawing Review (PTO-948)
3) ☒ Information Disclosure Statement(s) (PTO-1449 or PTO/SB/08) Paper No(s)/Mail Date _____.
4) ☐ Interview Summary (PTO-413) Paper No(s)/Mail Date. _____.
5) ☐ Notice of Informal Patent Application (PTO-152)
6) ☐ Other: _____.

DETAILED ACTION

Election/Restrictions

1. Applicant's election with traverse of Group I, claims 1-42 in the reply filed on October 26, 2004 is acknowledged. The traversal is on the ground(s) that an amendment to claim 43 obviates the restriction between Groups I and II; Groups II and III; no proper grounds have been established between Groups I, II and Group III and the proposed classification is not correct. This is not found persuasive because the amendment does not dictate that Group II require technology, e.g. a computer. Also, the Group I/II and Group II/III distinctions were set for from paragraphs 2 and 3 from the previous Office Action. The Examiner inadvertently did not provide a distinction between Groups I/III and only indicated a separate search was required for each grouping.

2. On Thursday, January 6, 2005 telephone interview with Mr. Kent Chambers discussed these issue along with the fact that the Group I, II and III claim groupings were correct, but the description of each grouping was not correct in the response, i.e. no "browser method" or "browser device" or "storage medium" is associated with the identified Group I, II or III claims from the restriction requirement mailed June 23, 2004. Thus, the following is noted:

Inventions Group I and III are related as combination and subcombination. Inventions in this relationship are distinct if it can be shown that (1) the combination as claimed does not require the particulars of the subcombination as claimed for patentability, and (2) that the subcombination has utility by itself or in other combinations (MPEP § 806.05(c)). In the instant case, the combination as claimed does not require the particulars of the subcombination as claimed because no plurality of modules are required. The subcombination has separate utility such as a configuration script for a network device.

The requirement is still deemed proper and is therefore made FINAL.

However, the Examiner may entertain rejoinder of the Group III claims if patentable subject matter is allowed from the Group I claims and the Group III claims closely mirror the Group I claims.

3. Claims 43-64 are withdrawn from further consideration pursuant to 37 CFR 1.142(b), as being drawn to a nonelected invention, there being no allowable generic or linking claim. Applicant timely traversed the restriction (election) requirement in the reply filed on October 26, 2004.

4. Applicant is reminded that upon the cancellation of claims to a non-elected invention, the inventorship must be amended in compliance with 37 CFR 1.48(b) if one or more of the currently named inventors is no longer an inventor of at least one claim remaining in the application. Any amendment of inventorship must be accompanied by a request under 37 CFR 1.48(b) and by the fee required under 37 CFR 1.17(i).

Claim Rejections - 35 USC § 103

5. The following is a quotation of 35 U.S.C. 103(a) which forms the basis for all obviousness rejections set forth in this Office action:

> (a) A patent may not be obtained though the invention is not identically disclosed or described as set forth in section 102 of this title, if the differences between the subject matter sought to be patented and the prior art are such that the subject matter as a whole would have been obvious at the time the invention was made to a person having ordinary skill in the art to which said subject matter pertains. Patentability shall not be negatived by the manner in which the invention was made.

6. Claims 1-42 are rejected under 35 U.S.C. 103(a) as being unpatentable over Gozdeck et al, US 6,636,852.

Gozdeck discloses, e.g. Figs. 1, 3, a system for paying commissions to a sales agent comprising servers, e.g. 114, and a compensation report, e.g. 122, from sales database, e.g. 110, S9. Gozdeck does not specifically disclose the terms first/second party, modules, selling agreements, a processor and memory. However, the sales database would inherently comprise modules and selling agreements used to determine compensation between the sales agent and another party (corporation), while using a processor and memory would have been obvious to one of ordinary skill in the art when reviewing the computer system disclosed. As per a plurality of distributors, this would have been an obvious design choice for one of ordinary skill in the art.

7. Further pertinent references of interest are noted on the attached PTO-892.

8. Applicant's two Information Disclosure Statements (IDS) have been reviewed, in part. It is noted the IDS received August 27, 2001 did not include the various US Application Numbers along with the cited Non Patent Literature. Thus, each reference has been crossed out and not reviewed. If Applicant intends on submitting each reference, it is suggested the relevant portion of the document be identified. Otherwise, the documents will be given a cursory review due to the sheer volume.

9. Any inquiry concerning this communication or earlier communications from the examiner should be directed to Andrew Joseph Rudy whose telephone number is 703-308-7808. The examiner can normally be reached on Monday thru Fridays.

If attempts to reach the examiner by telephone are unsuccessful, the examiner's supervisor, Robert P. Olszewski can be reached on 703-308-5183. The fax phone number for the organization where this application or proceeding is assigned is 703-872-9306.

Information regarding the status of an application may be obtained from the Patent Application Information Retrieval (PAIR) system. Status information for published applications may be obtained from either Private PAIR or Public PAIR. Status information for unpublished applications is available through Private PAIR only. For more information about the PAIR system, see http://pair-direct.uspto.gov. Should you have questions on access to the Private PAIR system, contact the Electronic Business Center (EBC) at 866-217-9197 (toll-free).

Andrew Joseph Rudy

Notice of References Cited	Application No. 09/810,514	Applicant(s) CHAO ET AL.	
	Examiner Andrew Joseph Rudy	Art Unit 3627	Page 1 of 1

U.S. PATENT DOCUMENTS

*		Document Number Country Code-Number-Kind Code	Date MM-YYYY	Name	Classification
	A	US-6,782,369	08-2004	Carrott, Richard F.	705/1
	B	US-6,772,204	08-2004	Hansen, Peter A.	709/220
	C	US-6,714,914	03-2004	Peters et al.	705/4
	D	US-6,636,852	10-2003	Gozdeck et al.	707/9
	E	US-6,594,633	07-2003	Broerman, Vincent S.	705/1
	F	US-6,477,533	11-2002	Schiff et al.	707/10
	G	US-			
	H	US-			
	I	US-			
	J	US-			
	K	US-			
	L	US-			
	M	US-			

FOREIGN PATENT DOCUMENTS

*		Document Number Country Code-Number-Kind Code	Date MM-YYYY	Country	Name	Classification
	N					
	O					
	P					
	Q					
	R					
	S					
	T					

NON-PATENT DOCUMENTS

*		Include as applicable: Author, Title Date, Publisher, Edition or Volume, Pertinent Pages)
	U	
	V	
	W	
	X	

*A copy of this reference is not being furnished with this Office action. (See MPEP § 707.05(a).)
Dates in MM-YYYY format are publication dates. Classifications may be US or foreign.

U.S. Department of Commerce, Patent and Trademark Office	Attorney Docket No.	Serial No.
	T00071	09/810,514
INFORMATION DISCLOSURE STATEMENT BY APPLICANT	Applicant(s)	
(Use several sheets if necessary)	David Chao, et al.	
	Filing Date	Group 3627
	March 15, 2001	~~1792~~

PTO/SB/08A (10-01)
NOV 22 2004
PATENT & TRADEMARK OFFICE

U.S. Patent Documents

*Examiner Initial		Document Number	Date	Name	Class	Subclass	Filing Date If Appropriate
ASR	AA	6,662,164	12/09/03	Koppelman et al.	705	14	
ASR	AB	6,275,871	08/14/01	Reinfelder et al.	709	328	
ASR	AC	5,483,444	01/09/96	Heintzeman et al.	364	401	
ASR	AD	4,825,360	04/25/89	Knight, Jr.	364	200	
	AE						
	AF						
	AG						
	AH						
	AI						
	AJ						
	AK						

Foreign Patent Documents

							Translation	
		Document	Date	Country	Class	Subclass	Yes	No
ASR	AL	EP 0817017 A2	01/1998	Europe	G06F	9/46	☐	☐
	AM						☐	☐
	AN						☐	☐
	AO							
	AP							

OTHER ART (Including Author, Title, Date, Pertinent Pages, Etc.)

ASR	AR	Hansen, Hans Robert, "Wirtschaftsinformatik I," Lucius & Lucius
ASR	AS	Trilogy-Volvo Master License Agreement, April 29, 1997.
ASR	AT	U.S. Patent & Trademark Office, PALM Sample Printouts, published October 31, 1989

Examiner	Robert Joseph Pascal	Date Considered	January 8, 2005

*EXAMINER: Initial if reference considered, whether or not citation is in conformance with MPEP 609; Draw line through citation if not in conformance and not considered. Include copy of this form with your communication to applicant.

U.S. Department of Commerce, Patent and Trademark Office	Attorney Docket No.	Serial No.
	T00071	09/810,514
INFORMATION DISCLOSURE STATEMENT BY APPLICANT	Applicant(s)	
(Use several sheets if necessary)	David Chao, et al.	
	Filing Date	Group 3627
	March 15, 2001	~~1792~~

OIPE JC15 NOV 22 2004 PATENT & TRADEMARK OFFICE

U.S. Patent Documents

*Examiner Initial		Document Number	Date	Name	Class	Subclass	Filing Date If Appropriate
	AA						
	AB						
	AC						
	AD						
	AE						
	AF						
	AG						
	AH						
	AI						
	AJ						
	AK						

Foreign Patent Documents

							Translation	
		Document	Date	Country	Class	Subclass	Yes	No
	AL						☐	☐
	AM						☐	☐
	AN						☐	☐
	AO							
	AP							

OTHER ART (Including Author, Title, Date, Pertinent Pages, Etc.)

ADR	AR	U.S. Patent & Trademark Office, Examiner's Bi-Weekly Time Worksheet (FORM PTO 690E), 1995.
ADR	AS	Martin, James, Principles of Object-Oriented Analysis and Design, Prentice Hall, 1993.
ADR	AT	Patent Office Professional Association, Agreement between U.S. Department of Commerce/Patent and Trademark Office and the Patent Office Professional Association, pp. 39, 93, 94, 97-100, 1986.

Examiner Robert Joseph Pascal | Date Considered January 8, 2005

*EXAMINER: Initial if reference considered, whether or not citation is in conformance with MPEP 609; Draw line through citation if not in conformance and not considered. Include copy of this form with your communication to applicant.

U.S. Department of Commerce, Patent and Trademark Office	Attorney Docket No.	Serial No.
	T00071	09/810,514
INFORMATION DISCLOSURE STATEMENT BY APPLICANT	Applicant(s)	
(Use several sheets if necessary)	David Chao, et al.	
	Filing Date	Group 3627
	March 15, 2001	~~1792~~

OIPE MC151 NOV 2 2 2004 PATENT & TRADEMARK OFFICE

U.S. Patent Documents

*Examiner Initial		Document Number	Date	Name	Class	Subclass	Filing Date If Appropriate
	AA						
	AB						
	AC						
	AD						
	AE						
	AF						
	AG						
	AH						
	AI						
	AJ						
	AK						

Foreign Patent Documents

							Translation	
		Document	Date	Country	Class	Subclass	Yes	No
	AL						☐	☐
	AM						☐	☐
	AN						☐	☐
	AO							
	AP							

OTHER ART (Including Author, Title, Date, Pertinent Pages, Etc.)

	AR	U.S. Patent and Trademark Office, Manual of Patent Program Procedure, published October 31, 1989
	AS	U.S. Patent and Trademark Office, PALM 3 User's Guide, published October 31, 1989.
	AT	

Examiner Andrew Joseph Rudy | Date Considered January 8, 2005

*EXAMINER: Initial if reference considered, whether or not citation is in conformance with MPEP 609; Draw line through citation if not in conformance and not considered. Include copy of this form with your communication to applicant.

OIPE JC17
AUG 23 2001
PATENT & TRADEMARK OFFICE

85160.924/T00071

IN THE UNITED STATES PATENT AND TRADEMARK OFFICE

In re the Application of	
CHAO et al.	
Serial No: 09/810,514	Examiner: Unassigned
Filed: March 15, 2001	
For: METHOD AND SYSTEM FOR MANAGING DISTRIBUTOR INFORMATION	Art Unit: ~~2173~~ 3627

RECEIVED
AUG 27 2001
Technology Center 2100

INFORMATION DISCLOSURE STATEMENT

Assistant Commissioner for Patents
Box IDS
Washington, D.C. 20231

Sir:

Pursuant to 37 C.F.R. § 1.56 and § 1.98, Applicant hereby submits the following art in connection with the above-referenced patent application for "METHOD AND SYSTEM FOR MANAGING DISTRIBUTOR INFORMATION."

Examiner Initial	U.S. Patent No.	Inventor(s)	Issue Date
ASR	5,369,732	Lynch et al.	11-29-1994
ASR	5,515,524	Lynch et al.	05-07-1996
ASR	5,708,798	Lynch et al.	01-13-1998
ASR	5,825,651	Gupta et al.	10-20-1998

Examiner Initial			
ASR	5,878,400	Carter, III	03-02-1999
ASR	6,002,854	Lynch et al.	12-14-1999
ASR	6,157,922	Vaughan	12-05-2000

U.S. Appl. No.	Inventor(s)	Filing Date
08/780,600	Shah et al.	01-08-1997
08/931,878	Gupta	09-17-1997
09/081,857	Koppelman et al.	05-19-1998
09/163,752	Waugh et al.	09-30-1998
09/165,656	Gupta	10-03-1998
09/253,427	Carter, III	02-19-1999
09/413,963	Lynch et al.	03-10-1997
09/730,481	Vaughan	12-04-2000
09/809,991	Chao et al.	03-15-2001
09/810,012	Chao et al.	03-15-2001
09/810,515	Zhou et al.	03-15-2001
09/810,519	Zhou et al.	03-15-2001
09/896,140	Gharavy	06-29-2001
09/896,144	Gharavy	06-29-2001

09/810,514
85160.924/T00071

RECEIVED
AUG 27 2001
Technology Center 2100

Publications:

1. NORMAN WALSH, XSL The Extensible Style Language [online]. Web Techniques, January 1999 [retrieved on 2001-02-11]. Retrieved from the Internet: <URL: http://www.webtechniques.com/archives/1990/01/walsh/>.

2. SELENA SOL, What is a Markup Language [online]. Web Developer's Virtual Library, March 8, 1999 [retrieved on 2001-04-17]. Retrieved from the Internet: <URL: http://wdvl.internet.com/Authoring/Languages/XML/Tutorials/Intro/what_is_markup_language>.

3. SELENA SOL, What is XML [online]. Web Developer's Virtual Library, March 8, 1999 [retrieved on 2001-02-11]. Retrieved from the Internet: <URL: http://wdvl.internet.com/Authoring/Languages/XML/Tutorials/Intro/what_is_xml.html>.

4. SELENA SOL, The Well-Formed Document [online]. Web Developer's Virtual Library, March 29, 1999 [retrieved on 2001-02-11]. Retrieved from the Internet: <URL: http://wdvl.internet.com/Authoring/Languages/XML/Tutorials/Intro/well_formed_doc.html>.

5. SELENA SOL, Introducing the Valid XML Document and the DTD [online]. Web Developer's Virtual Library, May 3, 1999 [retrieved on

2001-02-11]. Retrieved from the Internet: <URL: http://wdvl.internet.com/Authoring/Languages/XML/Tutorials/Intro/dtd_intro.html>.

6. XSLT, Xpath and XSL Formatting Objects [online]. Web Developer's Virtual Library [retrieved on 2001-02-11]. Retrieved from the Internet: <URL: http://wdvl.internet.com/Authoring/Languages/XSL/>.

7. ADAM RIFKIN, A Look at XML [online], [retrieved on 2001-02-11]. Retrieved from the Internet: <URL: http://www.webdeveloper.com/xml/xml_a_look_at_xml.html>.

8. A Flexible Commission System to Improve Your Agency Relationships, CSC: Financial Services – S3+ Contracts and Commissions [online], [retrieved on 2001-08-15]. Retrieved from the Internet: <URL: http://www.csc-fs.com/MARKETS/detail/pc_s3contracts.asp>.

9. PolicyLink Commission System, CSC: Financial Services [online], [retrieved on 2001-08-15]. Retrieved from the Internet: <URL: http://www.csc-fs.com/MARKETS/detail/la_policylinkcomm.asp>.

10. Pictorial, Inc. – Insurance and Financial Services Training [online], Dec. 2, 2000 [retrieved on 2001-08-16]. Retrieved from the Internet: <URL: http://www.pictorial.com/>.

11. What is AppointPAK? [online], [retrieved on 2001-08-16]. Retrieved from the Internet: <URL: http://www.bisys-licensing.com/apptpak/whatis.htm>.

12. AppointPAK Features & Benefits [online], [retrieved on 2001-08-16]. Retrieved from the Internet: <URL: http://www.bisys-licensing.com/apptpak/features.htm#buried>.

13. What is e-PAL? [online], [retrieved on 2001-08-16]. Retrieved from the Internet: <URL: http://www.bisys-licensing.com/palvt/whatis.html>.

14. e-PAL Features & Benefits [online], [retrieved on 2001-08-16]. Retrieved from the Internet: <URL: http://www.bisys-licensing.com/palvt/features.html#source>.

15. Nine e-PAL Services, Features and Benefits [online], [retrieved on 2001-08-16]. Retrieved from the Internet: <URL: http://www.bisys-licensing.com/palvt/serv.html#adjust>.

16. HRMS Enterprise Applications, Human Resources Management, PeopleSoft, Inc. [online], [retrieved on 2001-08-16]. Retrieved from the Internet: <URL: http://www.peoplesoft.com/en/us/products/applications/hrm/HRMS/hrmsea/index.html>.

17. HRMS Collaborative Applications, Human Resources Management, PeopleSoft, Inc. [online], [retrieved on 2001-08-16]. Retrieved from

the Internet: <URL: http://www.peoplesoft.com/en/us/products/applications/hrm/HRMS/hrmsca/index.html>.

18. Financial Planning Made Easy, American Express, Financial Services [online], [retrieved on 2001-08-16]. Retrieved from the Internet: <URL: http://finance.americanexpress.com/sif/cda/page/0,1641,4588,00.asp>.

19. Advice and Planning, American Express, Financial Services [online], [retrieved on 2001-08-16]. Retrieved from the Internet: <URL: http://finance.americanexpress.com/sif/cda/page/0,1641,7569,00.asp>.

20. Why ContractMaker, And How Does It Work?, Legal Contracts, Digital Contracts, Inc., [online], [retrieved on 2001-08-08]. Retrieved from the Internet: <URL: http://www.digicontracts.com/info/whyhow.html>.

21. Frequently Asked Questions, Digital Contracts, Inc., [online], [retrieved on 2001-08-16]. Retrieved from the Internet: <URL: http://www.digicontracts.com/kits/faqs.html>.

Andrew Joseph Rudy

January 8, 2005

UNITED STATES PATENT AND TRADEMARK OFFICE

UNITED STATES DEPARTMENT OF COMMERCE
United States Patent and Trademark Office
Address: COMMISSIONER FOR PATENTS
P.O. Box 1450
Alexandria, Virginia 22313-1450
www.uspto.gov

Bib Data Sheet

CONFIRMATION NO. 6193

SERIAL NUMBER	FILING OR 371(c) DATE	CLASS	GROUP ART UNIT	ATTORNEY DOCKET NO.
09/810,514	03/15/2001 RULE	705	3623	85160.924/T00071

APPLICANTS

David Chao, Austin, TX;
Brian Blount, Austin, TX;
Charles Erickson, Cedar Park, TX;
Shari Gharavy, Austin, TX;
Cheng Zhou, Austin, TX;
Joshua Toub, Austin, TX;

** CONTINUING DATA **********

** FOREIGN APPLICATIONS **********

IF REQUIRED, FOREIGN FILING LICENSE GRANTED
** 04/23/2001

		STATE OR COUNTRY	SHEETS DRAWING	TOTAL CLAIMS	INDEPENDENT CLAIMS
Foreign Priority claimed	☐ yes ☒ no	TX	4	64	5
35 USC 119 (a-d) conditions met	☐ yes ☐ no ☐ Met after Allowance				
Verified and Acknowledged	Examiner's Signature Initials				

ADDRESS
33438

TITLE
Method and system for managing distributor information

FILING FEE RECEIVED	FEES: Authority has been given in Paper No. _____ to charge/credit DEPOSIT ACCOUNT No. _____ for following:	☐ All Fees ☐ 1.16 Fees (Filing) ☐ 1.17 Fees (Processing Ext. of time) ☐ 1.18 Fees (Issue) ☐ Other _____ ☐ Credit
1792		

Search Notes

Application No.	Applicant(s)	
09/810,514	CHAO ET AL.	
Examiner	**Art Unit**	
Andrew Joseph Rudy	3627	

SEARCHED			
Class	Subclass	Date	Examiner
707	9	1/8/2005	AJR
711	1	1/8/2005	AJR

INTERFERENCE SEARCHED			
Class	Subclass	Date	Examiner

SEARCH NOTES (INCLUDING SEARCH STRATEGY)		
	DATE	EXMR

Index of Claims

Application No.	Applicant(s)
09/810,514	CHAO ET AL.
Examiner	**Art Unit**
Andrew Joseph Rudy	3627

√	Rejected	–	(Through numeral) Cancelled	N	Non-Elected	A	Appeal
=	Allowed	÷	Restricted	I	Interference	O	Objected

Claim		Date
Final	Original	1/9/18
	1	✓
	2	↑
	3	
	4	
	5	
	6	
	7	
	8	
	9	
	10	
	11	
	12	
	13	
	14	
	15	
	16	
	17	
	18	
	19	
	20	
	21	
	22	
	23	
	24	
	25	
	26	
	27	
	28	
	29	
	30	
	31	
	32	
	33	
	34	
	35	
	36	
	37	
	38	
	39	
	40	
	41	↓
	42	✓
	43	N
	44	↑
	45	
	46	
	47	
	48	
	49	↓
	50	N

Claim		Date
Final	Original	1/9/18
	51	N
	52	↑
	53	
	54	
	55	
	56	
	57	
	58	
	59	
	60	
	61	
	62	
	63	↓
	64	N
	65	
	66	
	67	
	68	
	69	
	70	
	71	
	72	
	73	
	74	
	75	
	76	
	77	
	78	
	79	
	80	
	81	
	82	
	83	
	84	
	85	
	86	
	87	
	88	
	89	
	90	
	91	
	92	
	93	
	94	
	95	
	96	
	97	
	98	
	99	
	100	

Claim		Date
Final	Original	
	101	
	102	
	103	
	104	
	105	
	106	
	107	
	108	
	109	
	110	
	111	
	112	
	113	
	114	
	115	
	116	
	117	
	118	
	119	
	120	
	121	
	122	
	123	
	124	
	125	
	126	
	127	
	128	
	129	
	130	
	131	
	132	
	133	
	134	
	135	
	136	
	137	
	138	
	139	
	140	
	141	
	142	
	143	
	144	
	145	
	146	
	147	
	148	
	149	
	150	

IN THE UNITED STATES PATENT AND TRADEMARK OFFICE

Applicants:	David Chao, Brian Blount, Charles Erickson, Shari Gharavy, Cheng Zhou, Joshua Toub		
Assignee:	Trilogy Development Group, Inc.		
Title:	METHOD AND SYSTEM FOR MANAGING DISTRIBUTOR INFORMATION		
Serial No.:	09/810,514	Filing Date:	March 15, 2001
Examiner:	Andrew J. Rudy	Group Art Unit:	3627
Docket No.:	T00071	Customer No.:	33438

Austin, Texas
July 12, 2005

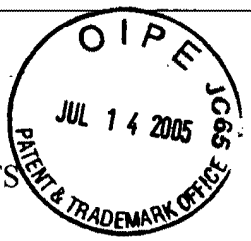

MAIL STOP AMENDMENT
COMMISSIONER FOR PATENTS
PO Box 1450
Alexandria, VA 22313-1450

RESPONSE TO NON-FINAL OFFICE ACTION

Dear Sir:

This paper is responsive to the Office Action dated January 12, 2005, having a shortened statutory period expiring on April 12, 2005. Accompanying this response is a petition under 37 C.F.R. § 1.136 for extension of time by three (3) months setting a new time for response of July 12, 2005. Further examination and reconsideration are respectfully requested in view of the amendments and remarks set forth below.

Ex. 1002 230/597

AMENDMENTS TO THE CLAIMS

1. (Original) A system for managing relationships between a first party and a second party comprising:

at least one processor;

memory coupled to said at least one processor;

said memory comprising a plurality of modules configured to manage distributor information;

said plurality of modules comprising a selling agreements module configured to generate a selling agreement;

said plurality of modules comprising a commission module configured to determine commission amounts associated with a sales transaction based on said selling agreement;

said plurality of modules comprising a licensing module configured to determine if a party associated with said sales transaction has a valid license;

said plurality of modules comprising a payment module for distributing payment associated with sales transaction to said party.

2. (Original) The system of claim 2 wherein said licensing module is further configured to determine if a party associated with said sales transaction comprises a valid appointment.

3. (Original) The system of claim 1 wherein said plurality of modules further comprises a distributor administration module configured to manage information associated with a plurality of distributors.

4. (Original) The system of claim 1 wherein said selling agreement comprises compensation components.

5. (Original) The system of claim 4 wherein said selling agreement comprises document components.

6. (Original) The system of claim 5 wherein said selling agreements module configured to generate said selling agreement utilizes a configuration engine to determine which of said compensation components and said document components to include.

7. (Original) The method of claim 6 wherein said commission module accesses a commission engine to determine said commission amounts.

8. (Original) The system of claim 1 wherein said selling agreement comprises a binding contract between an institution having at least one product and a distributor.

9. (Original) The system of claim 8 wherein said institution comprises financial institution.

10. (Original) The system of claim 8 wherein said product comprise financial product.

11. (Original) The system of claim 10 wherein said financial product comprises life insurance.

12. (Original) A system for managing relationships between a first party and a second party comprising:

a database source comprising a plurality of data objects representative of at least one distributing party, at least one selling agreement and at least one license or appointment associated with said at least one distributing party;

a distributor management engine configured to obtain at least one of said plurality of data objects from said database source and determine whether said at least one distributing party conforms with said at least one selling agreement and said at least one license or appointment is valid.

13. (Original) The system of claim 12 further comprising:

a backbone coupled to said distributor management engine, said backbone configured to transport said at least one of said plurality of data objects.

Ex. 1002 232/597

14. (Original) The system of claim 12 further comprising:
an interface for obtaining a plurality of business rules defining relationships between an institution and said at least one distributing party.

15. (Original) The system of claim 13 further comprising:
a commission engine configured to utilize said backbone to fetch said at least one selling agreement from said database source.

16. (Original) The system of claim 15 wherein said commission engine generates commission schemes utilized to model a set of selling agreement objects.

17. (Original) The system of claim 16 wherein said distributor management engine generates payments based on said selling agreement objects.

18. (Original) The system of claim 12 further comprising:
a workflow process engine configured to process workflow events.

19. (Original) The system of claim 18 wherein said workflow process events are determined by business rules defined by a user.

20. (Original) The system of claim 19 further comprising:
a commerce configuration engine configured to provide a configuration engine access to said business rules.

21. (Original) The system of claim 12 further comprising:
a report engine configured to generate a plurality of reports associated with said at least one distributing party.

22. (Original) The system of claim 21 wherein said report engine utilizes report templates to generate said plurality of reports.

23. (Original) The system of claim 12 further comprising:
a distributor administration module for managing said plurality of data objects.

Ex. 1002 233/597

24. (Original) The system of claim 12 further comprising:

a licensing and appointment module configured to enable an institution to manage said at least one license or appointments data object for at least one said distributor.

25. (Original) The system of claim 24 wherein said licensing and appointment module is configured to validate license or appointment compliance with a set of industry regulations by evaluating said at least one license or appointment data object.

26. (Original) The system of claim 12 further comprising:

a selling agreements module configured to enable said institution to define and create a business contract with said at least one distributing party.

27. (Original) The system of claim 26 wherein said selling agreements module manages a set of business rules governing how contract components are combined into said at least one selling agreement associated with each of said at least one distributing party.

28. (Original) The system of claim 27 further comprising:

a debt management module configured to enable said institution to manage distributor advances and repayments.

29. (Original) The system of claim 28 wherein said debt management module is utilized to define and manage a set of payment rules defining parameters for paying said at least one distributing party.

30. (Original) The system of claim 12 further comprising:

a net pay module enabling said institution to track and calculate payments to distributors.

31. (Original) The system of claim 12 wherein said institution comprises a financial services institution.

32. (Original) A system for managing relationships between a first party and a second party comprising:

Ex. 1002 234/597

an interface for obtaining a plurality of business rules defining relationships between an institution and at least one distributor;

a database source comprising a plurality of data objects representative of said at least one distributor, at least one selling agreement and at least one license or appointment associated with said at least one distributor;

a commission engine configured to determine a commission amount associated with said at least one distributor by evaluating said at least one selling agreement data object;

a backbone coupled to said distributor management engine, said backbone configured to transport said at least one of said plurality of data objects to a plurality of modules;

said plurality of modules comprising, a distributor administration module for managing said plurality of data objects;

said plurality of modules comprising, a licensing and appointment module configured to determine if said at least one license or appointment data object associated with said at least one distributor is in compliance with a set of industry regulations;

said plurality of modules comprising, a selling agreements module configured to enable said institution to define and create a selling agreement with said at least one distributor;

said plurality of modules comprising, a payment module configured to distribute said commission amount to said at least one distributor.

33. (Original) The system of claim 32 wherein said commission engine utilizes said backbone to fetch said at least one selling agreement from said database source.

34. (Original) The system of claim 32 further comprising:

a workflow process engine configured to process workflow events, said workflow process events determined by said business rules.

35. (Original) The system of claim 32 further comprising:

a commerce configuration engine configured to provide access to said business rules.

36. (Original) The system of claim 32 further comprising:

a report engine configured to generate a plurality of reports associated with said at least one distributor.

37. (Original) The system of claim 36 wherein said report engine utilizes report templates to generate said plurality of reports.

38. (Original) The system of claim 32 wherein said selling agreement comprises a contract between said institution and said at least one distributor.

39. (Original) The system of claim 38 wherein said selling agreements module manages a set of business rules governing how contract components are combined into said at least one selling agreement associated with each of said at least one distributors.

40. (Original) The system of claim 32 further comprising:

a debt management module configured to enable said institution to manage distributor advances and repayments.

41. (Original) The system of claim 28 wherein said debt management module is utilized to define and manage a set of payment rules defining parameters for paying said at least one distributor.

42. (Original) The system of claim 12 wherein said institution comprises a financial services institution.

43. (Withdrawn) A method for using a data processing system for managing relationships between a first party and a second party comprising:

generating a selling agreement using resources of the data processing system to define a relationship between a first party and a second party;

determining a commission amount associated with a sales transaction based on said selling agreement using resources of the data processing system;

determining if said second party associated with said sales transaction has a valid license using resources of the data processing system;

distributing said commission amount to individuals associated with said sales transaction using resources of the data processing system.

44. (Withdrawn) The method of claim 43 further comprising:

determining if said second party associated with said sales transaction comprises a valid appointment.

45. (Withdrawn) The method of claim 43 wherein said selling agreement comprises compensation components.

46. (Withdrawn) The method of claim 45 wherein said selling agreement comprises document components.

47. (Withdrawn) The method of claim 43 wherein said generating said selling agreement further comprises:

obtain rules associated with said selling agreement;

determining which of said compensation components and said document components to include in said selling agreement based on said rules.

48. (Withdrawn) The method of claim 43 further comprising:

accessing a commission model to determine said commission amounts.

49. (Withdrawn) The method of claim 43 wherein said first party comprises an institution having at least one product to be sold by a second party.

50. (Withdrawn) The method of claim 49 wherein said second party comprises a distributor.

51. (Withdrawn) The method of claim 49 wherein said institution comprises a financial institution.

52. (Withdrawn) The method of claim 51 wherein said at least one product comprise financial product.

53. (Withdrawn) The method of claim 52 wherein said financial product comprises life insurance.

54. (Withdrawn) A computer program product comprising:

a computer usable medium comprising computer readable code for managing relationships between a first party and a second party comprising, said computer readable program code configured to:

generate a selling agreement defining a relationship between a first party and a second party;

determine a commission amount associated with a sales transaction based on said selling agreement;

determine if said second party associated with said sales transaction has a valid license;

distribute said commission amount to individuals associated with said sales transaction.

55. (Withdrawn) The computer program product of claim 54 further comprising computer readable program code configured to determine if said second party associated with said sales transaction comprises a valid appointment.

56. (Withdrawn) The computer program product of claim 54 wherein said selling agreement comprises compensation components.

57. (Withdrawn) The computer program product of claim 56 wherein said selling agreement comprises document components.

58. (Withdrawn) The computer program product of claim 54 wherein said computer readable program code configured to generate said selling agreement further comprises computer readable code configured to:

obtain rules associated with said selling agreement;

determining which of said compensation components and said document components to include in said selling agreement based on said rules.

59. (Withdrawn) The computer program product of claim 54 further comprising computer readable program code configured to access a commission model to determine said commission amounts.

60. (Withdrawn) The computer program product of claim 54 wherein said first party comprises an institution having at least one product to be sold by a second party.

61. (Withdrawn) The computer program product of claim 60 wherein said second party comprises a distributor.

62. (Withdrawn) The computer program product of claim 60 wherein said institution comprises a financial institution.

63. (Withdrawn) The computer program product of claim 60 wherein said at least one product comprises a financial product.

64. (Withdrawn) The computer program product of claim 63 wherein said financial product comprises life insurance.

REMARKS

Claims 1-64 are pending.

Claims 43-64 have been withdrawn.

Claim Rejections - 35 U.S.C. § 103

Claims 1-42 stand rejected under 35 U.S.C. § 103(a) as being unpatentable over U.S. Patent No. 6,636,852 issued to Gozdeck et al. (referred to herein as "*Gozdeck*"). Applicant respectfully traverses the rejection.

In general, *Gozdeck* relates to:

> A computer-implemented method for computing the compensation for sales agents within a corporate sales force of a deploying company includes steps of creating one or more sales agent compensation plans tailored to provide an incentive for the sales agents to sell goods and/or services according to a corporate sales strategy." *Gozdeck*, Abstract.

The computer-implemented method for computing the compensation for sales agents of *Gozdeck* is intended to address the problem of sales agents "typically spend[ing] an inordinate amount of time estimating their compensation, time that should rather be expended in the field, selling the goods and/or services with which the sales agent is tasked with selling." *Id.*, col. 1, lns. 38-42. Thus, *Gozdeck* is targeted towards:

> creating a sales agent compensation plan, the compensation plan being tailored to provide an incentive for the sales agent to sell goods and/or services according to a corporate sales strategy; storing the compensation plan within a database; providing remote access to the database via a computer network; enabling the sales agent to remotely access the database and to input past sales into the database and to input, qualify, modify and store future sales opportunities into the database; applying the past sales and future sales opportunities to the stored compensation plan to calculate a compensation for the sales agent and reporting the calculated compensation to the sales agent over the network. *Id.*, col. 2, lns. 5-18.

Gozdeck uses database 110 to store a compensation plan or plans "that the deploying company (the company deploying and implementing the methods and systems of the present invention) uses to determine the compensation of their sales agents." *Id.*, col. 3, ln. 65-col. 4, ln. 1.

Gozdeck further teaches that:

> In broad terms, a compensation plan includes the conditions that a sales agent must meet to be paid compensation, and how much compensation is to be paid. Compensation plans may include a plurality of plan elements, including several revenue classes, quotas, transaction factors, incentives and/or compensation rates, for example. *Id.*, col. 4, lns. 1-6.

Notably missing from the admittedly "broad" teachings of *Gozdeck* including in the "broad" recitation of compensation plan elements is any mention of:

(i) "a licensing module configured to determine if a party associated with said sales transaction has a valid license" (Claim 1);

(ii) "a database source comprising a plurality of data objects representative of ... at least one license or appointment associated with said at least one distributing party;

a distributor management engine configured to ... determine whether ... said at least one license or appointment is valid" (Claim 12); or

(iii) "a licensing and appointment module configured to determine if said at least one license or appointment data object associated with said at least one distributor is in compliance with a set of industry regulations" (Claim 32);

An obviousness rejection under 35 U.S.C. § 103 requires an evaluation "of the claimed invention as a whole." Graham v. John Deere Co., 383 U.S. 1, 17 (1966), 148 USPQ 459, 476 (1966). Applicants respectfully submit that *Gozdeck* lacks any teachings or suggestions, explicitly or inherently, related to "a licensing module" (as recited in claim 1), "data objects representative of ... at least one license or appointment ... and a licensing and appointment module" (as recited in claim 12), or "a licensing an appointment module" (as recited in claim 32).

Gozdeck focuses on technology to allow a company to determine, and the sales representatives to easily view, compensation information. However, *Gozdeck* fails to teach or suggest a key component addressed by the technology taught by the present application: "managing regulatory information and ensuring that distributors are licensed and appointed to sell the products manufactured by the provider" (Present Application, p. 17, lines 9-10) and "regulatory

constraints upon product sales" (Present Application, p. 16, line 15). Thus, not only does *Gozdeck* lack any teachings or suggestions of the claim elements set forth in claims 1, 12, and 32 above, these claim elements themselves are non-trivial, significant components of a solution that addresses problems of regulation by licensing and/or appointments not comprehended by *Gozdeck.*

Applicants note that the Examiner has identified inherent teachings of *Gozdeck.* Namely, the Examiner states that "the sales database would inherently comprise modules and selling agreements used to determine compensation between the sales agent and another party (corporation), while using a processor and memory would have been obvious to one or ordinary skill in the art when reviewing the computer system disclosed." Office Action, p. 4, para. 6 (emphasis added). Even assuming the validity and a broad interpretation of such inherent teachings of *Gozdeck*, such inherent teachings by their nature fail to teach or suggest "a licensing module" (as recited in claim 1), "data objects representative of ... at least one license or appointment ... and a licensing and appointment module" (as recited in claim 12), or "a licensing an appointment module" (as recited in claim 32)" that can be used, for example, to address the not insignificant regulatory constraints upon the sales of some products.

Accordingly, Applicants respectfully request withdrawal of the rejections of claims 1, 12, and 32 for at least the reasons set forth above. Applicants also respectfully request withdrawal of claims dependent upon claims 1, 12, and 32 for at least the same reasons presented for claims 1, 12, and 32.

(Note: the invention is limited by the claims and not by specific embodiments contained in the Detailed Description of the Present Application).

CONCLUSION

In view of the amendments and remarks set forth herein, the application is believed to be in condition for allowance and a notice to that effect is solicited. Nonetheless, should any issues remain that might be subject to resolution through a telephonic interview, the examiner is requested to telephone the undersigned.

I hereby certify that this correspondence is being deposited with the United States Postal Service as First Class Mail in an envelope addressed to: Mail Stop Amendment, Commissioner for Patents, P.O. Box 1450, Alexandria, VA 22313-1450, on July 12, 2005.

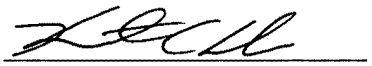

Attorney for Applicant(s)

7-12-2005

Date of Signature

Respectfully submitted,

Kent B. Chambers
Attorney for Applicant(s)
Reg. No. 38,839

OIPE JC995
JUL 14 2005
PATENT & TRADEMARK OFFICE

Gp 1792 DFW

IN THE UNITED STATES PATENT AND TRADEMARK OFFICE

Applicants:	David Chao, Brian Blount, Charles Erickson, Shari Gharavy, Cheng Zhou, Joshua Toub		
Assignee:	Trilogy Development Group, Inc.		
Title:	METHOD AND SYSTEM FOR MANAGING DISTRIBUTOR INFORMATION		
Serial No.:	09/810,514	Filing Date:	March 15, 2001
Examiner:	Andrew J. Rudy	Group Art Unit:	1792
Docket No.:	T00071	Customer No.:	33438

Austin, Texas
July 12, 2005

MAIL STOP AMENDMENT
COMMISSIONER FOR PATENTS
P.O. BOX 1450
ALEXANDRIA, VA 22313-1450

07/15/2005 HTECKLU1 00000007 09810514

01 FC:1253 1020.00 OP

PETITION FOR EXTENSION OF TIME

Dear Sir:

Applicants respectfully petition for a three (3) month extension of time within which to respond to the January 12, 2005, outstanding Office Action, such extension allowing the undersigned until July 12, 2005 to respond.

Enclosed is a check for $1,020.00 to cover the fee for the requested extension. Please deduct any additional fee which may be necessary or credit any overpayment to Deposit Account No. 502264.

I hereby certify that this correspondence is being deposited with the United States Postal Service as First Class Mail in an envelope addressed to: Mail Stop Amendment, COMMISSIONER FOR PATENTS, P.O. Box 1450, Alexandria, VA 22313-1450, on July 12, 2005.

Attorney for Applicant(s) — Date of Signature: 7-12-2005

Respectfully submitted,

Kent B. Chambers
Attorney for Applicant(s)
Reg. No. 38,839

BEST AVAILABLE COPY

PATENT APPLICATION FEE DETERMINATION RECORD
Effective October 1, 2000

Application or Docket Number: 09/810514

CLAIMS AS FILED - PART I

	(Column 1)	(Column 2)
TOTAL CLAIMS	64	
FOR	NUMBER FILED	NUMBER EXTRA
TOTAL CHARGEABLE CLAIMS	64 minus 20=	* 44
INDEPENDENT CLAIMS	5 minus 3 =	* 2
MULTIPLE DEPENDENT CLAIM PRESENT	☐	

* If the difference in column 1 is less than zero, enter "0" in column 2

SMALL ENTITY TYPE ☐		OR	OTHER THAN SMALL ENTITY	
RATE	FEE		RATE	FEE
BASIC FEE	355.00	OR	BASIC FEE	710.00
X$ 9=		OR	X$18=	792.00
X40=		OR	X80=	160.00
+135=		OR	+270=	
TOTAL		OR	TOTAL	1662.00

DW 7/14/05

CLAIMS AS AMENDED - PART II

AMENDMENT A

	(Column 1) CLAIMS REMAINING AFTER AMENDMENT		(Column 2) HIGHEST NUMBER PREVIOUSLY PAID FOR	(Column 3) PRESENT EXTRA
Total	* 64	Minus	** 64	=
Independent	* 5	Minus	*** 5	=
FIRST PRESENTATION OF MULTIPLE DEPENDENT CLAIM	☐			

SMALL ENTITY		OR	OTHER THAN SMALL ENTITY	
RATE	ADDITIONAL FEE		RATE	ADDITIONAL FEE
X$ 9=		OR	X$18=	
X40=		OR	X80=	
+135=		OR	+270=	
TOTAL ADDIT. FEE		OR	TOTAL ADDIT. FEE	

AMENDMENT B

	(Column 1) CLAIMS REMAINING AFTER AMENDMENT		(Column 2) HIGHEST NUMBER PREVIOUSLY PAID FOR	(Column 3) PRESENT EXTRA
Total	*	Minus	**	=
Independent	*	Minus	***	=
FIRST PRESENTATION OF MULTIPLE DEPENDENT CLAIM	☐			

RATE	ADDITIONAL FEE		RATE	ADDITIONAL FEE
X$ 9=		OR	X$18=	
X40=		OR	X80=	
+135=		OR	+270=	
TOTAL ADDIT. FEE		OR	TOTAL ADDIT. FEE	

AMENDMENT C

	(Column 1) CLAIMS REMAINING AFTER AMENDMENT		(Column 2) HIGHEST NUMBER PREVIOUSLY PAID FOR	(Column 3) PRESENT EXTRA
Total	*	Minus	**	=
Independent	*	Minus	***	=
FIRST PRESENTATION OF MULTIPLE DEPENDENT CLAIM	☐			

RATE	ADDITIONAL FEE		RATE	ADDITIONAL FEE
X$ 9=		OR	X$18=	
X40=		OR	X80=	
+135=		OR	+270=	
TOTAL ADDIT. FEE		OR	TOTAL ADDIT. FEE	

* If the entry in column 1 is less than the entry in column 2, write "0" in column 3.
** If the "Highest Number Previously Paid For" IN THIS SPACE is less than 20, enter "20."
*** If the "Highest Number Previously Paid For" IN THIS SPACE is less than 3, enter "3."
The "Highest Number Previously Paid For" (Total or Independent) is the highest number found in the appropriate box in column 1.

UNITED STATES PATENT AND TRADEMARK OFFICE

UNITED STATES DEPARTMENT OF COMMERCE
United States Patent and Trademark Office
Address: COMMISSIONER FOR PATENTS
P.O. Box 1450
Alexandria, Virginia 22313-1450
www.uspto.gov

APPLICATION NO.	FILING DATE	FIRST NAMED INVENTOR	ATTORNEY DOCKET NO.	CONFIRMATION NO.
09/810,514	03/15/2001	David Chao	85160.924/T00071	6193

33438 7590 10/03/2005

HAMILTON & TERRILE, LLP
P.O. BOX 203518
AUSTIN, TX 78720

EXAMINER	
RUDY, ANDREW J	
ART UNIT	**PAPER NUMBER**
3627	

DATE MAILED: 10/03/2005

Please find below and/or attached an Office communication concerning this application or proceeding.

Office Action Summary	Application No.	Applicant(s)	
	09/810,514	CHAO ET AL.	
	Examiner	Art Unit	
	Andrew Joseph Rudy	3627	

-- The MAILING DATE of this communication appears on the cover sheet with the correspondence address --

Period for Reply

A SHORTENED STATUTORY PERIOD FOR REPLY IS SET TO EXPIRE 3 MONTH(S) FROM THE MAILING DATE OF THIS COMMUNICATION.

- Extensions of time may be available under the provisions of 37 CFR 1.136(a). In no event, however, may a reply be timely filed after SIX (6) MONTHS from the mailing date of this communication.
- If the period for reply specified above is less than thirty (30) days, a reply within the statutory minimum of thirty (30) days will be considered timely.
- If NO period for reply is specified above, the maximum statutory period will apply and will expire SIX (6) MONTHS from the mailing date of this communication.
- Failure to reply within the set or extended period for reply will, by statute, cause the application to become ABANDONED (35 U.S.C. § 133). Any reply received by the Office later than three months after the mailing date of this communication, even if timely filed, may reduce any earned patent term adjustment. See 37 CFR 1.704(b).

Status

1)☒ Responsive to communication(s) filed on *14 July 2005*.

2a)☐ This action is **FINAL**. 2b)☒ This action is non-final.

3)☐ Since this application is in condition for allowance except for formal matters, prosecution as to the merits is closed in accordance with the practice under *Ex parte Quayle*, 1935 C.D. 11, 453 O.G. 213.

Disposition of Claims

4)☒ Claim(s) *1-64* is/are pending in the application.

4a) Of the above claim(s) *43-64* is/are withdrawn from consideration.

5)☐ Claim(s) _____ is/are allowed.

6)☒ Claim(s) *1-42* is/are rejected.

7)☐ Claim(s) _____ is/are objected to.

8)☐ Claim(s) _____ are subject to restriction and/or election requirement.

Application Papers

9)☐ The specification is objected to by the Examiner.

10)☐ The drawing(s) filed on _____ is/are: a)☐ accepted or b)☐ objected to by the Examiner.

Applicant may not request that any objection to the drawing(s) be held in abeyance. See 37 CFR 1.85(a).

Replacement drawing sheet(s) including the correction is required if the drawing(s) is objected to. See 37 CFR 1.121(d).

11)☐ The oath or declaration is objected to by the Examiner. Note the attached Office Action or form PTO-152.

Priority under 35 U.S.C. § 119

12)☐ Acknowledgment is made of a claim for foreign priority under 35 U.S.C. § 119(a)-(d) or (f).

a)☐ All b)☐ Some * c)☐ None of:

1.☐ Certified copies of the priority documents have been received.

2.☐ Certified copies of the priority documents have been received in Application No. _____.

3.☐ Copies of the certified copies of the priority documents have been received in this National Stage application from the International Bureau (PCT Rule 17.2(a)).

* See the attached detailed Office action for a list of the certified copies not received.

Attachment(s)

1) ☒ Notice of References Cited (PTO-892)
2) ☐ Notice of Draftsperson's Patent Drawing Review (PTO-948)
3) ☐ Information Disclosure Statement(s) (PTO-1449 or PTO/SB/08) Paper No(s)/Mail Date _____.
4) ☐ Interview Summary (PTO-413) Paper No(s)/Mail Date. _____.
5) ☐ Notice of Informal Patent Application (PTO-152)
6) ☐ Other: _____.

Ex. 1002 247/397

DETAILED ACTION

1. Applicant's 7/14/05 REMARKS have been reviewed and are convincing. The previous rejection is withdrawn. Claims 43-62 remain withdrawn from consideration.

Claim Rejections - 35 USC § 103

2. Claims 1-42 are rejected under 35 U.S.C. 103(a) as being unpatentable over Carrott, US 6,782,369.

Carrott discloses a method for configuring compensations, providing financial service companies a toolkit for creating and modeling commission schedules used to compensate their sales force, e.g. Figs. 1-5. Carrott discloses a processor, e.g. 500, a memory, e.g. 500, a plurality of modules, e.g. cols. 5-7, lines 65-26, distributors, and licenses, e.g. col. 12, lines 60-67. Carrott does not disclose the term selling agreement associated with a valid license. However, Carrott does disclose a commission received for each sale completed. Official Notice is taken that selling agreements associated with a sales agent having a valid licenses has been common knowledge in the sales transaction art. To have provided such for Carrot would have been obvious to one of ordinary skill in the art. The motivation for having provides such would have been to incorporate common knowledge association means to track sales personal and their productivity. Similarly, Official Notice is taken that document components, life insurance, advances, payment rules, repayments, workflow events have been common knowledge in the sales transaction art. To have provide such for Carrott would have been obvious to one of ordinary skill in the art.

Applicant's July 14, 2004 REMARKS are moot in light of the new grounds of rejection.

3. Further pertinent references of interest are noted on the attached PTO-892.

4. Any inquiry concerning this communication or earlier communications from the examiner should be directed to Andrew Joseph Rudy whose telephone number is 571-272-6789. The examiner can normally be reached on Monday thru Friday.

If attempts to reach the examiner by telephone are unsuccessful, the examiner's supervisor, Alexander G. Kalinowski can be reached on 571-272-6771. The fax phone number for the organization where this application or proceeding is assigned is 571-283-8300.

Information regarding the status of an application may be obtained from the Patent Application Information Retrieval (PAIR) system. Status information for published applications may be obtained from either Private PAIR or Public PAIR. Status information for unpublished applications is available through Private PAIR only. For more information about the PAIR system, see http://pair-direct.uspto.gov. Should you have questions on access to the Private PAIR system, contact the Electronic Business Center (EBC) at 866-217-9197 (toll-free).

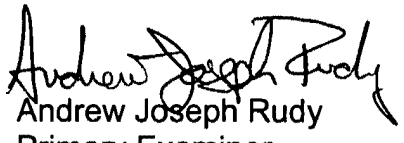

Andrew Joseph Rudy
Primary Examiner
Art Unit 3627

Notice of References Cited	Application/Control No. 09/810,514	Applicant(s)/Patent Under Reexamination CHAO ET AL.	
	Examiner Andrew Joseph Rudy	Art Unit 3627	Page 1 of 1

U.S. PATENT DOCUMENTS

*		Document Number Country Code-Number-Kind Code	Date MM-YYYY	Name	Classification
	A	US-6,662,164	12-2003	Koppelman et al.	705/14
	B	US-6,782,369	08-2004	Carrott, Richard F.	705/1
	C	US-6,938,021	08-2005	Shear et al.	705/67
	D	US-			
	E	US-			
	F	US-			
	G	US-			
	H	US-			
	I	US-			
	J	US-			
	K	US-			
	L	US-			
	M	US-			

FOREIGN PATENT DOCUMENTS

*		Document Number Country Code-Number-Kind Code	Date MM-YYYY	Country	Name	Classification
	N					
	O					
	P					
	Q					
	R					
	S					
	T					

NON-PATENT DOCUMENTS

*		Include as applicable: Author, Title Date, Publisher, Edition or Volume, Pertinent Pages)
	U	
	V	
	W	
	X	

*A copy of this reference is not being furnished with this Office action. (See MPEP § 707.05(a).)
Dates in MM-YYYY format are publication dates. Classifications may be US or foreign.

Index of Claims

Application/Control No.	Applicant(s)/Patent under Reexamination
09/810,514	CHAO ET AL.
Examiner	**Art Unit**
Andrew Joseph Rudy	3627

√	Rejected	–	(Through numeral) Cancelled	N	Non-Elected	A	Appeal
=	Allowed	÷	Restricted	I	Interference	O	Objected

| Claim | | Date | | | | | | |

Search Notes	Application/Control No.	Applicant(s)/Patent under Reexamination	
	09/810,514	CHAO ET AL.	
	Examiner	Art Unit	
	Andrew Joseph Rudy	3627	

SEARCHED			
Class	Subclass	Date	Examiner

INTERFERENCE SEARCHED			
Class	Subclass	Date	Examiner

SEARCH NOTES (INCLUDING SEARCH STRATEGY)		
	DATE	EXMR
East: relevant terms searched.	9/28/2005	AJR

OIPE IAP2
OCT 14 2005
PATENT & TRADEMARK OFFICE

DAW 3627/B

IN THE UNITED STATES PATENT AND TRADEMARK OFFICE

Applicants:	David Chao, Brian Blount, Charles Erickson, Shari Gharavy, Cheng Zhou, Joshua Toub
Assignee:	Trilogy Development Group, Inc.
Title:	METHOD AND SYSTEM FOR MANAGING DISTRIBUTOR INFORMATION

Serial No.:	09/810,514	Filing Date:	March 15, 2001
Examiner:	Andrew J. Rudy	Group Art Unit:	3627
Docket No.:	T00071	Customer No.:	33438

Austin, Texas
October 11, 2005

MAIL STOP AMENDMENT
COMMISSIONER FOR PATENTS
PO Box 1450
Alexandria, VA 22313-1450

INFORMATION DISCLOSURE STATEMENT WITH FEE

Sir:

Pursuant to 37 C.F.R. § 1.56, § 1.97 and § 1.98, Applicants wish to call the following documents to the attention of the Examiner.

A PTO form 1449 listing these documents is enclosed.

Citation of the above documents shall not be construed as:

1. an admission that the documents are necessarily prior art with respect to the instant invention;
2. a representation that a search has been made, other than as described above; or
3. an admission that the information cited herein is, or is considered to be, material to patentability as defined in § 1.56(b).

A check for $180.00 is enclosed for the Information Disclosure Statement fee under 37 C.F.R. §1.17(p). The Commissioner is hereby authorized to charge any additional fees which may be required, or credit any overpayment to Deposit Account 502264.

I hereby certify that this correspondence is being deposited with the United States Postal Service as First Class Mail in an envelope addressed to: Mail Stop Amendment, COMMISSIONER FOR PATENTS, P.O. Box 1450, Alexandria, VA 22313-1450, on October 11, 2005.

Attorney for Applicant(s) — Date of Signature: 10-11-2005

Respectfully submitted,

Kent B. Chambers
Attorney for Applicant(s)
Reg. No. 38,839

10/18/2005 HLE333 00000015 09810514
01 FC:1806 180.00 OP

U.S. Department of Commerce, Patent and Trademark Office	Attorney Docket No.	Serial No.
	T00071	09/810,514
INFORMATION DISCLOSURE STATEMENT BY APPLICANT	Applicant(s)	
(Use several sheets if necessary)	David Chao, et al.	
	Filing Date	Group
	March 15, 2001	3627

OIPE
OCT 14 2005
PATENT & TRADEMARK OFFICE

U.S. Patent Documents

*Examiner Initial		Document Number	Date	Name	Class	Subclass	Filing Date If Appropriate
	AA	5,369,732	11/29/1994	Lynch et al.	395	51	
	AB	5,515,524	05/07/1996	Lynch et al.	395	500	
	AC	5,708,798	01/13/1998	Lynch et al.	395	500	
	AD	5,825,651	10/20/1998	Gupta et al.	364	468.09	
	AE	5,878,400	03/02/1999	Carter III	705	20	
	AF	6,002,854	12/14/1999	Lynch et al.	395	500.01	
	AG	6,157,922	12/05/2000	Vaughan	706	46	
	AH	6,629,153	09/30/2003	Gupta et al.	709	316	
	AI	6,662,164	12/09/2003	Koppelman et al.	705	14	
	AJ	6,405,308	06/11/2002	Gupta et al.	713	1	
	AK	6,446,057	09/03/2002	Vaughan	706	46	

Foreign Patent Documents

							Translation	
		Document	Date	Country	Class	Subclass	Yes	No
	AL						☐	☐
	AM						☐	☐
	AN						☐	☐
	AO							

OTHER ART (Including Author, Title, Date, Pertinent Pages, Etc.)

	AP	Norman Walsh, XSL The Extensible Style Language [online], Web Techniques, January 1999 http://www.webtechniques.com/archives/1990/01/walsh/, retrieved 8/9/05
	AQ	Selena Sol, What is a Markup Language [online], Web Developer's Virtual Library, March 8, 1999, http://www.wdvl.internet.com/Authoring/Languages/XML/Tutorials/Intro/what_is_markup_language, retrieved 9/21/05
	AR	Selena Sol, What is XML [online], Web Developer's Virtual Library, March 8, 1999, http://wdvl.internet.com/Authoring/Languages/XML/Tutorials/Intro/what_is_xml.html, retrieved 9/16/05
	AQ	Selena Sol, The Well-Formed Document [online], Web Developer's Virtual Library, March 8, 1999, http://wdvl.internet.com/Authoring/Languages/XML/Tutorials/Intro/well_iformed_doc.html, retrieved 8/10/05

Examiner	Date Considered

*EXAMINER: Initial if reference considered, whether or not citation is in conformance with MPEP 609; Draw line through citation if not in conformance and not considered. Include copy of this form with your communication to applicant.

U.S. Department of Commerce, Patent and Trademark Office	Attorney Docket No.	Serial No.
	T00071	09/810,514
INFORMATION DISCLOSURE STATEMENT BY APPLICANT	Applicant(s)	
(Use several sheets if necessary)	David Chao, et al.	
	Filing Date	Group
	March 15, 2001	3627

U.S. Patent Documents

*Examiner Initial		Document Number	Date	Name	Class	Subclass	Filing Date If Appropriate
	AA	6,553,350	04/22/2003	Carter III	705	20	
	AB	6,865,524	03/08/2005	Shah et al.	703	13	
	AC	09/163,752		Waugh et al.			09/30/1998
	AD	09/413,963		Lynch et al.			10/07/1999
	AE	09/809,991		Chao et al.			03/15/2001
	AF	09/810,012		Chao et al.			03/15/2001
	AG	09/810,515		Zhou et al.			03/15/2001
	AH	09/810,519		Zhou et al.			03/13/2001
	AI	09/896,140		Gharavy			06/29/2001
	AJ	09/896,144		Gharavy			06/29/2001
	AK						

Foreign Patent Documents

							Translation	
		Document	Date	Country	Class	Subclass	Yes	No
	AL						☐	☐
	AM						☐	☐
	AN						☐	☐
	AO							

OTHER ART (Including Author, Title, Date, Pertinent Pages, Etc.)

	AP	Selena Sol, Introducing the Valid XML Document and the DTD [online], Web Developer's Virtual Library, May 3, 1999, http://wdvl.internet.com/Authoring/Languages/XML/Tutorials/Intro/dtd_intro.html, retrieved 8/10/05
	AQ	XSLT, Xpath and XSL Formatting Objects [online], Web Developer's Virtual Library, http://wdvl.internet.com/Authoring/Languages/XSL, retrieved 8/10/05
	AR	Adam Rifkin, A Look at XML [online], http://www.webdeveloper.com/xml/xml_a_look_at_xml.html, retrieved 8/10/05
	AS	A Flexible Commission System to Improve Your Agency Relationships, CSC: Financial Services – S3+ Contract and Commissions [online], http://www.csc-fs.com/MARKETS/detail/pc_s3_contracts.asp, retrieved 9/16/05

Examiner	Date Considered

*EXAMINER: Initial if reference considered, whether or not citation is in conformance with MPEP 609; Draw line through citation if not in conformance and not considered. Include copy of this form with your communication to applicant.

U.S. Department of Commerce, Patent and Trademark Office	Attorney Docket No.	Serial No.
	T00071	09/810,514
INFORMATION DISCLOSURE STATEMENT BY APPLICANT	Applicant(s)	
(Use several sheets if necessary)	David Chao, et al.	
	Filing Date	Group
	March 15, 2001	3627

U.S. Patent Documents

*Examiner Initial		Document Number	Date	Name	Class	Subclass	Filing Date If Appropriate
	AA						
	AB						
	AC						
	AD						
	AE						
	AF						
	AG						
	AH						
	AI						
	AJ						
	AK						

Foreign Patent Documents

							Translation	
		Document	Date	Country	Class	Subclass	Yes	No
	AL						☐	☐
	AM						☐	☐
	AN						☐	☐
	AO							

OTHER ART (Including Author, Title, Date, Pertinent Pages, Etc.)

	AP	PolicyLink Commission System, CSC: Financial Services [online], http://www.csc-fs.com/MARKETS/detail/la_policylinkcomm.asp, retrieved 9/16/05
	AQ	Pictorial, Inc. – Insurance and Financial Services Training [online], http://www.pictorial.com Retrieved August 16, 2001
	AR	What is AppointPak? [online], http://www.bisys-licensing.com/apptpak/whatis.htm, retrieved August 16, 2001
	AS	AppointPak Features and Benefits [online], http://www.bisys-licensing.com/apptpak/features/htm, Retrieved 9/16/05

Examiner	Date Considered

*EXAMINER: Initial if reference considered, whether or not citation is in conformance with MPEP 609; Draw line through citation if not in conformance and not considered. Include copy of this form with your communication to applicant.

U.S. Department of Commerce, Patent and Trademark Office	Attorney Docket No.	Serial No.
	T00071	09/810,514
INFORMATION DISCLOSURE STATEMENT BY APPLICANT	Applicant(s)	
(Use several sheets if necessary)	David Chao, et al.	
	Filing Date	Group
	March 15, 2001	3627

U.S. Patent Documents

*Examiner Initial		Document Number	Date	Name	Class	Subclass	Filing Date If Appropriate
	AA						
	AB						
	AC						
	AD						
	AE						
	AF						
	AG						
	AH						
	AI						
	AJ						
	AK						

Foreign Patent Documents

							Translation	
		Document	Date	Country	Class	Subclass	Yes	No
	AL						☐	☐
	AM						☐	☐
	AN						☐	☐
	AO							

OTHER ART (Including Author, Title, Date, Pertinent Pages, Etc.)

	AP	What is e-PAL? [online], http://www.bisys-licensing.com/palvt/whatis.htm, retrieved 9/16/05
	AQ	e-PAL Features & Benefits [online], http://www.bisys-licensing.com/palvt/features.htm, retrieved 9/16/05
	AR	Nine e-PAL Services, Features and Benefits [online], http://www.bisys-licensing.com/palvt/serv,html, retrieved 9/21/05
	AS	HRMS Enterprise Applications, Human Resources Management, PeopleSoft, Inc. [online], http://www.peoplesoft.com/en/us/products/applications/hrm/HRMS/hrmsea/index.html, retrieved 9/16/05

Examiner	Date Considered

*EXAMINER: Initial if reference considered, whether or not citation is in conformance with MPEP 609; Draw line through citation if not in conformance and not considered. Include copy of this form with your communication to applicant.

U.S. Department of Commerce, Patent and Trademark Office	Attorney Docket No.	Serial No.
	T00071	09/810,514
INFORMATION DISCLOSURE STATEMENT BY APPLICANT	Applicant(s)	
(Use several sheets if necessary)	David Chao, et al.	
	Filing Date	Group
	March 15, 2001	3627

U.S. Patent Documents

*Examiner Initial		Document Number	Date	Name	Class	Subclass	Filing Date If Appropriate
	AA						
	AB						
	AC						
	AD						
	AE						
	AF						
	AG						
	AH						
	AI						
	AJ						
	AK						

Foreign Patent Documents

							Translation	
		Document	Date	Country	Class	Subclass	Yes	No
	AL						☐	☐
	AM						☐	☐
	AN						☐	☐
	AO							

OTHER ART (Including Author, Title, Date, Pertinent Pages, Etc.)

	AP	HRMS Collaborative Applications, Human Resources Management, PeopleSoft, Inc. [online], http://www.peoplesoft.com/en/us/products/applications/hrm/HRMS/hrmsca/index.html, retrieved 9/16/05
	AQ	Financial Planning Made Easy, American Express Financial Services [online], http://finance.americanexpress.com/sif/cda/page/0,1641,4588,00.asp, retrieved 9/16/05
	AR	Advice and Planning, American Express Financial Services [online], http://finance.americanexpress.com/sif/cda/page/0,1641,7569,00.asp, retrieved 9/16/05
	AS	Why ContractMaker, And How Does it Work?, Legal Contracts, Digital Contracts, Inc., [online], http://www.digicontracts.com/info/whyhow.html, retrieved 8/10/05

Examiner	Date Considered

*EXAMINER: Initial if reference considered, whether or not citation is in conformance with MPEP 609; Draw line through citation if not in conformance and not considered. Include copy of this form with your communication to applicant.

U.S. Department of Commerce, Patent and Trademark Office	Attorney Docket No.	Serial No.
	T00071	09/810,514
INFORMATION DISCLOSURE STATEMENT BY APPLICANT	Applicant(s)	
(Use several sheets if necessary)	David Chao, et al.	
	Filing Date	Group
	March 15, 2001	3627

U.S. Patent Documents

*Examiner Initial		Document Number	Date	Name	Class	Subclass	Filing Date If Appropriate
	AA						
	AB						
	AC						
	AD						
	AE						
	AF						
	AG						
	AH						
	AI						
	AJ						
	AK						

Foreign Patent Documents

							Translation	
		Document	Date	Country	Class	Subclass	Yes	No
	AL						☐	☐
	AM						☐	☐
	AN						☐	☐
	AO							

OTHER ART (Including Author, Title, Date, Pertinent Pages, Etc.)

	AP	Frequently Asked Questions, Digital Contracts, Inc., [online], http://www.digicontracts.com/kits/faqs.html, retrieved 8/10/05
	AQ	
	AR	
	AS	

Examiner	Date Considered

*EXAMINER: Initial if reference considered, whether or not citation is in conformance with MPEP 609; Draw line through citation if not in conformance and not considered. Include copy of this form with your communication to applicant.

OIPE IAP48
MAR 0 6 2006
PATENT & TRADEMARK OFFICE

IN THE UNITED STATES PATENT AND TRADEMARK OFFICE

Applicants:	David Chao, Brian Blount, Charles Erickson, Shari Gharavy, Cheng Zhou, Joshua Toub		
Assignee:	Trilogy Development Group, Inc.		
Title:	METHOD AND SYSTEM FOR MANAGING DISTRIBUTOR INFORMATION		
Serial No.:	09/810,514	Filing Date:	March 15, 2001
Examiner:	Andrew J. Rudy	Group Art Unit:	3627
Docket No.:	T00071	Customer No.:	33438

Austin, Texas
March 3, 2006

MAIL STOP AMENDMENT
COMMISSIONER FOR PATENTS
PO Box 1450
Alexandria, VA 22313-1450

RESPONSE TO NON-FINAL OFFICE ACTION

Dear Sir:

This paper is responsive to the Office Action dated October 3, 2005, having a shortened statutory period expiring on January 3, 2006. Accompanying this response is a petition under 37 C.F.R. § 1.136 for extension of time by two (2) months setting a new time for response of March 3, 2006. Further examination and reconsideration are respectfully requested in view of the amendments and remarks set forth below.

Ex. 1002 260/597
Copied from 10810514 on 04/06/2006

OIPE IAP48 MAR 06 2006 PATENT & TRADEMARK OFFICE

AMENDMENTS TO THE CLAIMS

1. (Currently Amended) A system for managing relationships between a first party and a second party comprising:

at least one processor;

memory coupled to said at least one processor;

said memory comprising a plurality of modules configured to manage distributor information;

said plurality of modules comprising a selling agreements module configured to generate a selling agreement;

said plurality of modules comprising a commission module configured to determine commission amounts associated with a sales transaction based on said selling agreement;

said plurality of modules comprising a licensing module configured to determine if a party associated with said sales transaction has a valid license;

said plurality of modules comprising a payment module for distributing payment associated with said sales transaction to said party.

2. (Original) The system of claim 2 wherein said licensing module is further configured to determine if a party associated with said sales transaction comprises a valid appointment.

3. (Original) The system of claim 1 wherein said plurality of modules further comprises a distributor administration module configured to manage information associated with a plurality of distributors.

4. (Original) The system of claim 1 wherein said selling agreement comprises compensation components.

5. (Original) The system of claim 4 wherein said selling agreement comprises document components.

Ex. 1002 261/597
Copied from 10810514 on 04/06/2006

6. (Original) The system of claim 5 wherein said selling agreements module configured to generate said selling agreement utilizes a configuration engine to determine which of said compensation components and said document components to include.

7. (Original) The method of claim 6 wherein said commission module accesses a commission engine to determine said commission amounts.

8. (Original) The system of claim 1 wherein said selling agreement comprises a binding contract between an institution having at least one product and a distributor.

9. (Original) The system of claim 8 wherein said institution comprises financial institution.

10. (Original) The system of claim 8 wherein said product comprise financial product.

11. (Original) The system of claim 10 wherein said financial product comprises life insurance.

12. (Original) A system for managing relationships between a first party and a second party comprising:

a database source comprising a plurality of data objects representative of at least one distributing party, at least one selling agreement and at least one license or appointment associated with said at least one distributing party;

a distributor management engine configured to obtain at least one of said plurality of data objects from said database source and determine whether said at least one distributing party conforms with said at least one selling agreement and said at least one license or appointment is valid.

13. (Original) The system of claim 12 further comprising:

a backbone coupled to said distributor management engine, said backbone configured to transport said at least one of said plurality of data objects.

Ex. 1002 262/597
Copied from 10810514 on 04/06/2006

14. (Original) The system of claim 12 further comprising:

an interface for obtaining a plurality of business rules defining relationships between an institution and said at least one distributing party.

15. (Original) The system of claim 13 further comprising:

a commission engine configured to utilize said backbone to fetch said at least one selling agreement from said database source.

16. (Original) The system of claim 15 wherein said commission engine generates commission schemes utilized to model a set of selling agreement objects.

17. (Original) The system of claim 16 wherein said distributor management engine generates payments based on said selling agreement objects.

18. (Original) The system of claim 12 further comprising:

a workflow process engine configured to process workflow events.

19. (Original) The system of claim 18 wherein said workflow process events are determined by business rules defined by a user.

20. (Original) The system of claim 19 further comprising:

a commerce configuration engine configured to provide a configuration engine access to said business rules.

21. (Original) The system of claim 12 further comprising:

a report engine configured to generate a plurality of reports associated with said at least one distributing party.

22. (Original) The system of claim 21 wherein said report engine utilizes report templates to generate said plurality of reports.

23. (Original) The system of claim 12 further comprising:

a distributor administration module for managing said plurality of data objects.

Ex. 1002 263/597
Copied from 10810514 on 04/06/2006

24. (Original) The system of claim 12 further comprising:

a licensing and appointment module configured to enable an institution to manage said at least one license or appointments data object for at least one said distributor.

25. (Original) The system of claim 24 wherein said licensing and appointment module is configured to validate license or appointment compliance with a set of industry regulations by evaluating said at least one license or appointment data object.

26. (Original) The system of claim 12 further comprising:

a selling agreements module configured to enable said institution to define and create a business contract with said at least one distributing party.

27. (Original) The system of claim 26 wherein said selling agreements module manages a set of business rules governing how contract components are combined into said at least one selling agreement associated with each of said at least one distributing party.

28. (Original) The system of claim 27 further comprising:

a debt management module configured to enable said institution to manage distributor advances and repayments.

29. (Original) The system of claim 28 wherein said debt management module is utilized to define and manage a set of payment rules defining parameters for paying said at least one distributing party.

30. (Original) The system of claim 12 further comprising:

a net pay module enabling said institution to track and calculate payments to distributors.

31. (Original) The system of claim 12 wherein said institution comprises a financial services institution.

32. (Original) A system for managing relationships between a first party and a second party comprising:

Ex. 1002 264/597
Copied from 10810514 on 04/06/2006

an interface for obtaining a plurality of business rules defining relationships between an institution and at least one distributor;

a database source comprising a plurality of data objects representative of said at least one distributor, at least one selling agreement and at least one license or appointment associated with said at least one distributor;

a commission engine configured to determine a commission amount associated with said at least one distributor by evaluating said at least one selling agreement data object;

a backbone coupled to said distributor management engine, said backbone configured to transport said at least one of said plurality of data objects to a plurality of modules;

said plurality of modules comprising, a distributor administration module for managing said plurality of data objects;

said plurality of modules comprising, a licensing and appointment module configured to determine if said at least one license or appointment data object associated with said at least one distributor is in compliance with a set of industry regulations;

said plurality of modules comprising, a selling agreements module configured to enable said institution to define and create a selling agreement with said at least one distributor;

said plurality of modules comprising, a payment module configured to distribute said commission amount to said at least one distributor.

33. (Original) The system of claim 32 wherein said commission engine utilizes said backbone to fetch said at least one selling agreement from said database source.

34. (Original) The system of claim 32 further comprising:

a workflow process engine configured to process workflow events, said workflow process events determined by said business rules.

35. (Original) The system of claim 32 further comprising:

a commerce configuration engine configured to provide access to said business rules.

36. (Original) The system of claim 32 further comprising:

a report engine configured to generate a plurality of reports associated with said at least one distributor.

Ex. 1002 265/597
Copied from 10810514 on 04/06/2006

37. (Original) The system of claim 36 wherein said report engine utilizes report templates to generate said plurality of reports.

38. (Original) The system of claim 32 wherein said selling agreement comprises a contract between said institution and said at least one distributor.

39. (Original) The system of claim 38 wherein said selling agreements module manages a set of business rules governing how contract components are combined into said at least one selling agreement associated with each of said at least one distributors.

40. (Original) The system of claim 32 further comprising:

a debt management module configured to enable said institution to manage distributor advances and repayments.

41. (Original) The system of claim 28 wherein said debt management module is utilized to define and manage a set of payment rules defining parameters for paying said at least one distributor.

42. (Original) The system of claim 12 wherein said institution comprises a financial services institution.

43. (Withdrawn) A method for using a data processing system for managing relationships between a first party and a second party comprising:

generating a selling agreement using resources of the data processing system to define a relationship between a first party and a second party;

determining a commission amount associated with a sales transaction based on said selling agreement using resources of the data processing system;

determining if said second party associated with said sales transaction has a valid license using resources of the data processing system;

distributing said commission amount to individuals associated with said sales transaction using resources of the data processing system.

Ex. 1002 266/597
Copied from 10810514 on 04/06/2006

44. (Withdrawn) The method of claim 43 further comprising:

determining if said second party associated with said sales transaction comprises a valid appointment.

45. (Withdrawn) The method of claim 43 wherein said selling agreement comprises compensation components.

46. (Withdrawn) The method of claim 45 wherein said selling agreement comprises document components.

47. (Withdrawn) The method of claim 43 wherein said generating said selling agreement further comprises:

obtain rules associated with said selling agreement;

determining which of said compensation components and said document components to include in said selling agreement based on said rules.

48. (Withdrawn) The method of claim 43 further comprising:

accessing a commission model to determine said commission amounts.

49. (Withdrawn) The method of claim 43 wherein said first party comprises an institution having at least one product to be sold by a second party.

50. (Withdrawn) The method of claim 49 wherein said second party comprises a distributor.

51. (Withdrawn) The method of claim 49 wherein said institution comprises a financial institution.

52. (Withdrawn) The method of claim 51 wherein said at least one product comprise financial product.

53. (Withdrawn) The method of claim 52 wherein said financial product comprises life insurance.

Ex. 1002 267/597
Copied from 10810514 on 04/06/2006

54. (Withdrawn) A computer program product comprising:

a computer usable medium comprising computer readable code for managing relationships between a first party and a second party comprising, said computer readable program code configured to:

generate a selling agreement defining a relationship between a first party and a second party;

determine a commission amount associated with a sales transaction based on said selling agreement;

determine if said second party associated with said sales transaction has a valid license;

distribute said commission amount to individuals associated with said sales transaction.

55. (Withdrawn) The computer program product of claim 54 further comprising computer readable program code configured to determine if said second party associated with said sales transaction comprises a valid appointment.

56. (Withdrawn) The computer program product of claim 54 wherein said selling agreement comprises compensation components.

57. (Withdrawn) The computer program product of claim 56 wherein said selling agreement comprises document components.

58. (Withdrawn) The computer program product of claim 54 wherein said computer readable program code configured to generate said selling agreement further comprises computer readable code configured to:

obtain rules associated with said selling agreement;

determining which of said compensation components and said document components to include in said selling agreement based on said rules.

59. (Withdrawn) The computer program product of claim 54 further comprising computer readable program code configured to access a commission model to determine said commission amounts.

Ex. 1002 268/597
Copied from 10810514 on 04/06/2006

60. (Withdrawn) The computer program product of claim 54 wherein said first party comprises an institution having at least one product to be sold by a second party.

61. (Withdrawn) The computer program product of claim 60 wherein said second party comprises a distributor.

62. (Withdrawn) The computer program product of claim 60 wherein said institution comprises a financial institution.

63. (Withdrawn) The computer program product of claim 60 wherein said at least one product comprises a financial product.

64. (Withdrawn) The computer program product of claim 63 wherein said financial product comprises life insurance.

Ex. 1002 269/597
Copied from 10810514 on 04/06/2006

REMARKS

Claims 1-64 are pending.

Claims 43-64 have been withdrawn.

Claim 1 has been amended for clarity to correct a minor informality.

Claim Rejections - 35 U.S.C. § 103

Claims 1-42 stand rejected under 35 U.S.C. § 103(a) as being unpatentable over U.S. Patent No. 6,782,369 issued to Carrott (referred to herein as "*Carrott*"). Applicants respectfully traverse the rejection.

Carrott relates to a "system and method of allocating commissions for sales made over the Internet and for dividing an otherwise indivisible Internet into defined geographic areas." *Carrott*, Abstract. Applicants respectfully submit that *Carrott* fails to teach or suggest:

- **Claim 1.** "A system for managing relationships between a first party and a second party" that includes:
    - a "plurality of modules comprising a licensing module configured to determine if a party associated with said sales transaction has a valid license."
- **Claim 12.** "A system for managing relationships between a first party and a second party" that includes:
    - "a database source comprising a plurality of data objects representative of ... at least one license or appointment associated with said at least one distributing party" and
    - a distributor management engine configured to ... determine whether said at least one distributing party conforms with said at least one selling agreement and said at least one license or appointment is valid.

Ex. 1002 270/597
Copied from 10810514 on 04/06/2006

- **Claim 32.** "A system for managing relationships between a first party and a second party" that includes:

    - a "plurality of modules comprising, a licensing and appointment module configured to determine if said at least one license or appointment data object associated with said at least one distributor is in compliance with a set of industry regulations."

To establish obviousness based on a combination of elements disclosed in the prior art or a modification of the prior art, there must be some motivation, suggestion or teaching of the desirability of making the claimed invention. *See In re Dance*, 160 F.3d 1339, 48 USPQ2d 1635, 1637 (Fed. Cir. 1998); *In re Gordon*, 733 F.2d 900, 221 USPQ 1125, 1127 (Fed. Cir. 1984). The motivation, suggestion or teaching may come explicitly from statements in the prior art, the knowledge of one of ordinary skill in the art, or, in some cases, the nature of the problem to be solved. *In re Dembiczak*, 175 F.3d 994, 998, 50 USPQ2d 1614, 1617 (Fed. Cir. 1999). Broad conclusory statements standing alone are not "evidence" of obviousness. *Id.* Additionally, hindsight is an impermissible basis for establishing a prima facie case of obviousness. W.L. Gore & Assocs. v. Garlock, Inc., 721 F.2d 1540, 1551, 220 USPQ 303, 312-13 (Fed. Cir. 1983). To prevent a hindsight-based obviousness analysis, the Federal Circuit has clearly established that the relevant inquiry for determining the scope and content of the prior art is whether there is a reason, suggestion, or motivation in the prior art or elsewhere that would have led one or ordinary skill in the art to select and modify *Carrott* in accordance with the Examiner's Official Notice so as to render the present invention obvious under 35 U.S.C. § 103.

The *Ruiz v. A.B. Chance Co.*, the Federal Circuit specifically stated that:

> In making the assessment of differences, section 103 specifically requires consideration of the claimed invention "as a whole." The "as a whole" instruction in title 35 prevents evaluation of the invention part by part. Without this important requirement, an obviousness assessment might break an invention into its component parts (A + B + C), then find a prior art reference containing A, another containing B, and another containing C, and on that basis alone declare the invention obvious. This form of hindsight reasoning, using the invention as a roadmap to find its prior art components, would discount the value of combining various existing features or principles in a new way to achieve a new result - often the very definition of invention. Section 103 precludes this hindsight discounting of the value of new

Ex. 1002 271/597
Copied from 10810514 on 04/06/2006

> combinations by requiring assessment of the invention as a whole. This court has provided further assurance of an "as a whole" assessment of the invention under § 103 by requiring a showing that an artisan of ordinary skill in the art at the time of invention, confronted by the same problems as the inventor and with no knowledge of the claimed invention, would select the various elements from the prior art and combine them in the claimed manner. In other words, the examiner or court must show some suggestion or motivation, before the invention itself, to make the new combination. 357 F.3d 1270, 69 USPQ2d (BNA) 1686 (Fed. Cir. Jan. 29, 2004).

Applicants respectfully submit that a *prima facie* case of obviousness has not been made because the present application, and thus hindsight, is being used to develop the *prima facie* case.

The Examiner admits that "*Carrott* does not disclose the term selling agreement associated with a valid license." Office Action, para 2. The Examiner continues:

> However, *Carrott* does disclose a commission received for each sale completed. Official Notice is taken tat selling agreements associated with a sales agent having a valid licenses has been common knowledge in the sales transaction art. To have provided such for Carrot would have been obvious to one of ordinary skill in the art. The motivation for having provides such would have been to incorporate common knowledge association means to track sales personal and their productivity. *Id.*

Applicants respectfully submit that although it was well-known that sales agents are supposed to have licenses to conduct certain types of sales transactions, a system for managing relationships between a first party and a second party that includes the above cited elements of Claims 1, 12, and 32 is not obvious. The Background section of the present application states that "any plan for distribution channel management must consider the number of channels, the number of distributors, compensation complexity, regulatory and licensing requirements and the number and types of products that will be sold." Present Application, Background, p. 3, lines 10-13. Thus, the present application recognizes that licensing requirements are known. The Background section of the present application also asserts that **"The distribution channel model within the financial services industry is very complex."** *Id.*, lines 1-2. Furthermore, "Credential management is a critical issue for many firms." *Id.*, p. 8, line 1. "This need [to track accreditation] is made more acute by constantly changing governmental rules and regulations, as well as by different regulations imposed by the different jurisdictions in which a firm operates." *Id.*, lines 8-11.

Ex. 1002 272/597
Copied from 10810514 on 04/06/2006

Although the necessity of licensed individuals in certain sales transaction contexts was well-known, Applicants respectfully submit, and have documented in the Present Application, that such recognition does not teach or suggest an enabling solution to a very complex problem. As stated by the Present Application, "In conclusion, there is a need for a solution ... where there is multiple channel selling, a fluid workforce, and regulatory constraints." *Id.*, p. 10, lines 12-16. Thus, the prior existence of the alleged motivation "to incorporate common knowledge association means to track sales personal and their productivity" is directly controverted by the Background section.

Thus, Applicants respectfully submit that the teachings of *Carrott* and the well-known need for licensed individuals in certain contexts, does not teach or suggest:

- **Claim 1.** "A system for managing relationships between a first party and a second party" that includes:
    - a "plurality of modules comprising a licensing module configured to determine if a party associated with said sales transaction has a valid license."
- **Claim 12.** "A system for managing relationships between a first party and a second party" that includes:
    - "a database source comprising a plurality of data objects representative of ... at least one license or appointment associated with said at least one distributing party" and
    - a distributor management engine configured to ... determine whether said at least one distributing party conforms with said at least one selling agreement and said at least one license or appointment is valid.

Ex. 1002 273/597
Copied from 10810514 on 04/06/2006

- **Claim 32.** "A system for managing relationships between a first party and a second party" that includes:
    - a "plurality of modules comprising, a licensing and appointment module configured to determine if said at least one license or appointment data object associated with said at least one distributor is in compliance with a set of industry regulations."

Note, the invention is defined by the claims and not by the Background, Summary, Figures, or Description contained in the Present Application.

Accordingly, Applicants respectfully request withdrawal of the rejection of independent Claims 1, 12, and 32 and, for at least the same reasons, withdrawal of claims directly or indirectly dependent upon Claims 1, 12, or 32.

CONCLUSION

In view of the amendments and remarks set forth herein, the application is believed to be in condition for allowance and a notice to that effect is solicited. Nonetheless, should any issues remain that might be subject to resolution through a telephonic interview, the examiner is requested to telephone the undersigned.

I hereby certify that this correspondence is being deposited with the United States Postal Service as First Class Mail in an envelope addressed to: Mail Stop Amendment, Commissioner for Patents, P.O. Box 1450, Alexandria, VA 22313-1450, on March 3, 2006.

Attorney for Applicant(s) — Date of Signature: 3-3-2006

Respectfully submitted,

Kent B. Chambers
Attorney for Applicant(s)
Reg. No. 38,839

Ex. 1002 274/597
Copied from 10810514 on 04/06/2006

OIPE IAP48
MAR 06 2006
PATENT & TRADEMARK OFFICE

TFW 3627

IN THE UNITED STATES PATENT AND TRADEMARK OFFICE

Applicants:	David Chao, Brian Blount, Charles Erickson, Shari Gharavy, Cheng Zhou, Joshua Toub		
Assignee:	Trilogy Development Group, Inc.		
Title:	METHOD AND SYSTEM FOR MANAGING DISTRIBUTOR INFORMATION		
Serial No.:	09/810,514	Filing Date:	March 15, 2001
Examiner:	Andrew J. Rudy	Group Art Unit:	3627
Docket No.:	T00071	Customer No.:	33438

Austin, Texas
March 3, 2006

MAIL STOP AMENDMENT
COMMISSIONER FOR PATENTS
P.O. BOX 1450
ALEXANDRIA, VA 22313-1450

PETITION FOR EXTENSION OF TIME

Dear Sir:

Applicants respectfully petition for a two (2) month extension of time within which to respond to the October 3, 2006, outstanding Office Action, such extension allowing the undersigned until March 3, 2006, to respond.

Enclosed is a check for $450.00 to cover the fee for the requested extension. Please deduct any additional fee which may be necessary or credit any overpayment to Deposit Account No. 502264.

I hereby certify that this correspondence is being deposited with the United States Postal Service as First Class Mail in an envelope addressed to: Mail Stop Amendment, COMMISSIONER FOR PATENTS, P.O. Box 1450, Alexandria, VA 22313-1450, on March 3, 2006.

Attorney for Applicant(s) — Date of Signature: 3-3-2006

Respectfully submitted,

Kent B. Chambers
Attorney for Applicant(s)
Reg. No. 38,839

03/08/2006 HMARZI1 00000043 09810514
01 FC:1252 450.00 OP

Copied from 10810514 on 04/06/2006

JUN 09 2006
PATENT & TRADEMARK OFFICE

IFW 3627

IN THE UNITED STATES PATENT AND TRADEMARK OFFICE

Applicants:	David Chao, Brian Blount, Charles Erickson, Shari Gharavy, Cheng Zhou, Joshua Toub
Assignee:	Trilogy Development Group, Inc.
Title:	METHOD AND SYSTEM FOR MANAGING DISTRIBUTOR INFORMATION

Serial No.:	09/810,514	Filing Date:	March 15, 2001
Examiner:	Andrew J. Rudy	Group Art Unit:	3627
Docket No.:	T00071	Customer No.:	33438

Austin, Texas
June 6, 2006

MAIL STOP AMENDMENT
COMMISSIONER FOR PATENTS
PO Box 1450
Alexandria, VA 22313-1450

06/12/2006 DTESSEM1 00000106 09810514
01 FC:1806 180.00 OP

INFORMATION DISCLOSURE STATEMENT WITH FEE

Sir:

Pursuant to 37 C.F.R. § 1.56, § 1.97 and § 1.98, Applicants wish to call the following documents to the attention of the Examiner.

A PTO form 1449 listing these documents is enclosed.

Citation of the above documents shall not be construed as:

1. an admission that the documents are necessarily prior art with respect to the instant invention;
2. a representation that a search has been made, other than as described above; or
3. an admission that the information cited herein is, or is considered to be, material to patentability as defined in § 1.56(b).

A check for $180.00 is enclosed for the Information Disclosure Statement fee under 37 C.F.R. §1.17(p). The Commissioner is hereby authorized to charge any additional fees which may be required, or credit any overpayment to Deposit Account 502264.

I hereby certify that this correspondence is being deposited with the United States Postal Service as First Class Mail in an envelope addressed to: Mail Stop Amendment, COMMISSIONER FOR PATENTS, P.O. Box 1450, Alexandria, VA 22313-1450, on June 6, 2006.

Attorney for Applicant(s) — Date of Signature: 6-6-06

Respectfully submitted,

Kent B. Chambers
Attorney for Applicant(s)
Reg. No. 38,839

U.S. Department of Commerce, Patent and Trademark Office	Attorney Docket No.	Serial No.
	T00071	09/810,514
INFORMATION DISCLOSURE STATEMENT BY APPLICANT	Applicant(s)	
(Use several sheets if necessary)	David Chao, et al.	
	Filing Date	Group
	March 15, 2001	3627

O.I.P.E. JUN 09 2006 PATENT & TRADEMARK OFFICE

U.S. Patent Documents

*Examiner Initial		Document Number	Date	Name	Class	Subclass	Filing Date If Appropriate
	AA	6,682,571	03/2005	Martin et al.	705	4	
	AB	6,671,818	12/2003	Mikurak	714	4	
	AC	6,618,706	09/2003	Rive et al.	705	30	
	AD	6,606,744	08/2003	Mikurak	717	174	
	AE	6,473,609	10/2002	Schwartz et al.	455	406	
	AF	6,105,001	08/2000	Masi et al.	705	14	
	AG	6,415,265	07/2002	Shell et al.	705	26	
	AH	6,377,956	04/2002	Hsu et al.	707	104.1	
	AI	6,351,812	02/2002	Datar et al.	713	182	
	AJ	2001/0049622	12/2001	Gozdeck et al.	705	11	
	AK	2001/0039547	11/2001	Black et al.	707	102	

Foreign Patent Documents

							Translation	
		Document	Date	Country	Class	Subclass	Yes	No
	AL						☐	☐
	AM						☐	☐
	AN						☐	☐
	AO							
	AP							

OTHER ART (Including Author, Title, Date, Pertinent Pages, Etc.)

	AR	
	AS	
	AT	

Examiner	Date Considered

*EXAMINER: Initial if reference considered, whether or not citation is in conformance with MPEP 609; Draw line through citation if not in conformance and not considered. Include copy of this form with your communication to applicant.

U.S. Department of Commerce, Patent and Trademark Office	Attorney Docket No.	Serial No.
	T00071	09/810,514
INFORMATION DISCLOSURE STATEMENT BY APPLICANT	Applicant(s)	
(Use several sheets if necessary)	David Chao, et al.	
	Filing Date	Group
	March 15, 2001	3627

OIPE 1400 JUN 09 2006 PATENT & TRADEMARK OFFICE

U.S. Patent Documents

*Examiner Initial		Document Number	Date	Name	Class	Subclass	Filing Date If Appropriate
	AA	2001/0037265	11/2001	Kleinberg	705	27	
	AB	6,134,533	10/2000	Shell	705	26	
	AC	6,065,026	05/2000	Cornelia et al.	715	531	
	AD	5,864,620	01/1999	Pettit	705	54	
	AE	5,181,162	01/1993	Smith et al.	715	530	
	AF						
	AG						
	AH						
	AI						
	AJ						
	AK						

Foreign Patent Documents

							Translation	
		Document	Date	Country	Class	Subclass	Yes	No
	AL						☐	☐
	AM						☐	☐
	AN						☐	☐
	AO							
	AP							

OTHER ART (Including Author, Title, Date, Pertinent Pages, Etc.)

	AR	
	AS	
	AT	

Examiner	Date Considered

*EXAMINER: Initial if reference considered, whether or not citation is in conformance with MPEP 609; Draw line through citation if not in conformance and not considered. Include copy of this form with your communication to applicant.

IN THE UNITED STATES PATENT AND TRADEMARK OFFICE

Applicants:	David Chao, Brian Blount, Charles Erickson, Shari Gharavy, Cheng Zhou, Joshua Toub		
Assignee:	Trilogy Development Group, Inc.		
Title:	METHOD AND SYSTEM FOR MANAGING DISTRIBUTOR INFORMATION		
Serial No.:	09/810,514	Filing Date:	March 15, 2001
Examiner:	Andrew J. Rudy	Group Art Unit:	3627
Docket No.:	T00071	Customer No.:	33438

Austin, Texas
August 2, 2006

COMMISSIONER FOR PATENTS
PO Box 1450
Alexandria, VA 22313-1450

INFORMATION DISCLOSURE STATEMENT WITH FEE

Sir:

Pursuant to 37 C.F.R. § 1.56, § 1.97 and § 1.98, Applicants wish to call the following documents to the attention of the Examiner.

A PTO form 1449 listing these documents is enclosed.

Citation of the above documents shall not be construed as:

1. an admission that the documents are necessarily prior art with respect to the instant invention;
2. a representation that a search has been made, other than as described above; or
3. an admission that the information cited herein is, or is considered to be, material to patentability as defined in § 1.56(b).

The Commissioner is hereby authorized to charge any additional fees which may be required, or credit any overpayment to Deposit Account 502264.

ELECTRONICALLY FILLED
AUGUST 2, 2006

Respectfully submitted,

/Kent B. Chambers/

Kent B. Chambers
Attorney for Applicant(s)
Reg. No. 38,839

U.S. Department of Commerce, Patent and Trademark Office	Attorney Docket No.	Serial No.
	T00071	09/810,514
INFORMATION DISCLOSURE STATEMENT BY APPLICANT	Applicant(s)	
(Use several sheets if necessary)	David Chao, et al.	
	Filing Date	Group
	March 15, 2001	3627

U.S. Patent Documents

*Examiner Initial		Document Number	Date	Name	Class	Subclass	Filing Date If Appropriate
	AA	US-6,055,637	04-2000	Hudson et al.	726	20	
	AB	US-6,662,164	12-2003	Koppelman et al.	705	14	
	AC	US-6,778,880	08-2004	Okamura, Eiji	700	226	
	AD	US-6,986,038	01-2006	Leah et al.	713	155	
	AE						
	AF						
	AG						
	AH						
	AI						
	AJ						
	AK						

Foreign Patent Documents

							Translation	
		Document	Date	Country	Class	Subclass	Yes	No
	AL						☐	☐
	AM						☐	☐
	AN						☐	☐
	AO							
	AP							

OTHER ART (Including Author, Title, Date, Pertinent Pages, Etc.)

	AR	
	AS	
	AT	

Examiner	Date Considered

*EXAMINER: Initial if reference considered, whether or not citation is in conformance with MPEP 609; Draw line through citation if not in conformance and not considered. Include copy of this form with your communication to applicant.

Electronic Patent Application Fee Transmittal

Application Number:	09810514
Filing Date:	15-Mar-2001
Title of Invention:	Method and system for managing distributor information
First Named Inventor:	David Chao
Filer:	Kent Bryan Chambers/Terri Munoz
Attorney Docket Number:	85160.924/T00071

Filed as Large Entity

Utility Filing Fees

Description	Fee Code	Quantity	Amount	Sub-Total in USD($)
Basic Filing:				
Pages:				
Claims:				
Miscellaneous-Filing:				
Petition:				
Patent-Appeals-and-Interference:				
Post-Allowance-and-Post-Issuance:				
Extension-of-Time:				

Description	Fee Code	Quantity	Amount	Sub-Total in USD($)
Miscellaneous:				
Submission- Information Disclosure Stmt	1806	1	180	180
		Total in USD ($)		**180**

Electronic Acknowledgement Receipt

EFS ID:	1137621
Application Number:	09810514
Confirmation Number:	6193
Title of Invention:	Method and system for managing distributor information
First Named Inventor:	David Chao
Customer Number:	33438
Filer:	Kent Bryan Chambers/Terri Munoz
Filer Authorized By:	Kent Bryan Chambers
Attorney Docket Number:	85160.924/T00071
Receipt Date:	02-AUG-2006
Filing Date:	15-MAR-2001
Time Stamp:	13:33:57
Application Type:	Utility
International Application Number:	

Payment information:

Submitted with Payment	yes
Payment was successfully received in RAM	$180
RAM confirmation Number	881
Deposit Account	

File Listing:

Document Number	Document Description	File Name Ex. 1002 283/597	File Size(Bytes)	Multi Part	Pages

1		T00071_IDS.pdf	4325201	yes	64

Multipart Description		
Doc Desc	**Start**	**End**
Information Disclosure Statement (IDS) Filed	1	2
Information Disclosure Statement (IDS) Filed	3	13
Information Disclosure Statement (IDS) Filed	14	38
Information Disclosure Statement (IDS) Filed	39	49
Information Disclosure Statement (IDS) Filed	50	64

Warnings:

Information:

2	Fee Worksheet (PTO-875)	fee-info.pdf	8164	no	2

Warnings:

Information:

Total Files Size (in bytes):	4333365

This Acknowledgement Receipt evidences receipt on the noted date by the USPTO of the indicated documents, characterized by the applicant, and including page counts, where applicable. It serves as evidence of receipt similar to a Post Card, as described in MPEP 503.

New Applications Under 35 U.S.C. 111

If a new application is being filed and the application includes the necessary components for a filing date (see 37 CFR 1.53(b)-(d) and MPEP 506), a Filing Receipt (37 CFR 1.54) will be issued in due course and the date shown on this Acknowledgement Receipt will establish the filing date of the application.

National Stage of an International Application under 35 U.S.C. 371

If a timely submission to enter the national stage of an international application is compliant with the conditions of 35 U.S.C. 371 and other applicable requirements a Form PCT/DO/EO/903 indicating acceptance of the application as a national stage submission under 35 U.S.C. 371 will be issued in addition to the Filing Receipt, in due course.

IN THE UNITED STATES PATENT AND TRADEMARK OFFICE

Applicants:	David Chao, Brian Blount, Charles Erickson, Shari Gharavy, Cheng Zhou, Joshua Toub		
Assignee:	Trilogy Development Group, Inc.		
Title:	METHOD AND SYSTEM FOR MANAGING DISTRIBUTOR INFORMATION		
Serial No.:	09/810,514	Filing Date:	March 15, 2001
Examiner:	Andrew J. Rudy	Group Art Unit:	3627
Docket No.:	T00071	Customer No.:	33438

Austin, Texas
August 25, 2006

COMMISSIONER FOR PATENTS
PO Box 1450
Alexandria, VA 22313-1450

INFORMATION DISCLOSURE STATEMENT WITH FEE

Sir:

Pursuant to 37 C.F.R. § 1.56, § 1.97 and § 1.98, Applicants wish to call the following documents to the attention of the Examiner.

A PTO form 1449 listing these documents is enclosed.

Citation of the above documents shall not be construed as:

1. an admission that the documents are necessarily prior art with respect to the instant invention;
2. a representation that a search has been made, other than as described above; or
3. an admission that the information cited herein is, or is considered to be, material to patentability as defined in § 1.56(b).

The Commissioner is hereby authorized to charge any additional fees which may be required, or credit any overpayment to Deposit Account 502264.

ELECTRONICALLY FILLED

AUGUST 25, 2006

Respectfully submitted,

/Kent B. Chambers/

Kent B. Chambers
Attorney for Applicant(s)
Reg. No. 38,839

U.S. Department of Commerce, Patent and Trademark Office	Attorney Docket No.	Serial No.
	T00071	09/810,514
INFORMATION DISCLOSURE STATEMENT BY APPLICANT	Applicant(s)	
(Use several sheets if necessary)	David Chao, et al.	
	Filing Date	Group
	March 15, 2001	3627

U.S. Patent Documents

*Examiner Initial		Document Number	Date	Name	Class	Subclass	Filing Date If Appropriate
	AA	6,751,596	06/2004	Hastings, Brian	705	10	
	AB						
	AC						
	AD						
	AE						
	AF						
	AG						
	AH						
	AI						
	AJ						
	AK						

Foreign Patent Documents

							Translation	
		Document	Date	Country	Class	Subclass	Yes	No
	AL						☐	☐
	AM						☐	☐
	AN						☐	☐
	AO							
	AP							

OTHER ART (Including Author, Title, Date, Pertinent Pages, Etc.)

	AR	
	AS	
	AT	

Examiner	Date Considered

*EXAMINER: Initial if reference considered, whether or not citation is in conformance with MPEP 609; Draw line through citation if not in conformance and not considered. Include copy of this form with your communication to applicant.

Electronic Patent Application Fee Transmittal

Application Number:	09810514
Filing Date:	15-Mar-2001
Title of Invention:	Method and system for managing distributor information
First Named Inventor:	David Chao
Filer:	Kent Bryan Chambers/Terri Munoz
Attorney Docket Number:	85160.924/T00071

Filed as Large Entity

Utility Filing Fees

Description	Fee Code	Quantity	Amount	Sub-Total in USD($)
Basic Filing:				
Pages:				
Claims:				
Miscellaneous-Filing:				
Petition:				
Patent-Appeals-and-Interference:				
Post-Allowance-and-Post-Issuance:				
Extension-of-Time:				

Description	Fee Code	Quantity	Amount	Sub-Total in USD($)
Miscellaneous:				
Submission- Information Disclosure Stmt	1806	1	180	180
		Total in USD ($)		**180**

Electronic Acknowledgement Receipt

EFS ID:	1172557
Application Number:	09810514
Confirmation Number:	6193
Title of Invention:	Method and system for managing distributor information
First Named Inventor:	David Chao
Customer Number:	33438
Filer:	Kent Bryan Chambers/Terri Munoz
Filer Authorized By:	Kent Bryan Chambers
Attorney Docket Number:	85160.924/T00071
Receipt Date:	25-AUG-2006
Filing Date:	15-MAR-2001
Time Stamp:	15:53:25
Application Type:	Utility
International Application Number:	

Payment information:

Submitted with Payment	yes
Payment was successfully received in RAM	$180
RAM confirmation Number	146
Deposit Account	

File Listing:

Document Number	Document Description	File Name Ex. 1002 289/597	File Size(Bytes)	Multi Part	Pages

1	Information Disclosure Statement (IDS) Filed	T00071_IDS5.pdf	79620	no	2
Warnings:					
Information:					
This is not an USPTO supplied IDS fillable form					
2	Information Disclosure Statement (IDS) Filed	6751596.pdf	1660099	no	25
Warnings:					
Information:					
This is not an USPTO supplied IDS fillable form					
3	Fee Worksheet (PTO-875)	fee-info.pdf	8164	no	2
Warnings:					
Information:					
		Total Files Size (in bytes):	1747883		

This Acknowledgement Receipt evidences receipt on the noted date by the USPTO of the indicated documents, characterized by the applicant, and including page counts, where applicable. It serves as evidence of receipt similar to a Post Card, as described in MPEP 503.

New Applications Under 35 U.S.C. 111
If a new application is being filed and the application includes the necessary components for a filing date (see 37 CFR 1.53(b)-(d) and MPEP 506), a Filing Receipt (37 CFR 1.54) will be issued in due course and the date shown on this Acknowledgement Receipt will establish the filing date of the application.

National Stage of an International Application under 35 U.S.C. 371
If a timely submission to enter the national stage of an international application is compliant with the conditions of 35 U.S.C. 371 and other applicable requirements a Form PCT/DO/EO/903 indicating acceptance of the application as a national stage submission under 35 U.S.C. 371 will be issued in addition to the Filing Receipt, in due course.

IN THE UNITED STATES PATENT AND TRADEMARK OFFICE

Applicants:	David Chao, Brian Blount, Charles Erickson, Shari Gharavy, Cheng Zhou, Joshua Toub		
Assignee:	Trilogy Development Group, Inc.		
Title:	METHOD AND SYSTEM FOR MANAGING DISTRIBUTOR INFORMATION		
Serial No.:	09/810,514	Filing Date:	March 15, 2001
Examiner:	Andrew J. Rudy	Group Art Unit:	3627
Docket No.:	T00071	Customer No.:	33438

Austin, Texas
October 13, 2006

COMMISSIONER FOR PATENTS
PO Box 1450
Alexandria, VA 22313-1450

INFORMATION DISCLOSURE STATEMENT WITH FEE

Sir:

Pursuant to 37 C.F.R. § 1.56, § 1.97 and § 1.98, Applicants wish to call the following documents to the attention of the Examiner.

A PTO form 1449 listing these documents is enclosed.

Citation of the above documents shall not be construed as:

1. an admission that the documents are necessarily prior art with respect to the instant invention;
2. a representation that a search has been made, other than as described above; or
3. an admission that the information cited herein is, or is considered to be, material to patentability as defined in § 1.56(b).

The Information Disclosure Statement fee is being paid via the USPTO-EFS. The Commissioner is hereby authorized to charge any additional fees which may be required, or credit any overpayment to Deposit Account 502264.

ELECTRONICALLY FILLED
October 13, 2006

Respectfully submitted,

/Kent B. Chambers/

Kent B. Chambers
Attorney for Applicant(s)
Reg. No. 38,839

U.S. Department of Commerce, Patent and Trademark Office	Attorney Docket No.	Serial No.
	T00071	09/810,514
INFORMATION DISCLOSURE STATEMENT BY APPLICANT	Applicant(s)	
(Use several sheets if necessary)	David Chao, et al.	
	Filing Date	Group
	March 15, 2001	3627

U.S. Patent Documents

*Examiner Initial		Document Number	Date	Name	Class	Subclass	Filing Date If Appropriate
	AA	2002/0055850	05/2002	Powell et al.	705	1	
	AB	2002/0120476	08/2002	Labelle et al.	705	4	
	AC	7,016,871	03/2006	Fisher et al.	705	35	
	AD						
	AE						
	AF						
	AG						
	AH						
	AI						
	AJ						
	AK						

Foreign Patent Documents

							Translation	
		Document	Date	Country	Class	Subclass	Yes	No
	AL						☐	☐
	AM						☐	☐
	AN						☐	☐
	AO							
	AP							

OTHER ART (Including Author, Title, Date, Pertinent Pages, Etc.)

	AR	Contractmaker, http:/web.archive.org/web/20010204115100/http://www.digicontracts.com, dated February 4, 2001
	AS	Contractmaker, http:/web.archive.org/web/20010303160139/www.digicontracts.com/lits/libdocumenu.html, dated March 3, 2001
	AT	

Examiner	Date Considered

*EXAMINER: Initial if reference considered, whether or not citation is in conformance with MPEP 609; Draw line through citation if not in conformance and not considered. Include copy of this form with your communication to applicant.

Electronic Patent Application Fee Transmittal

Application Number:	09810514
Filing Date:	15-Mar-2001
Title of Invention:	Method and system for managing distributor information
First Named Inventor:	David Chao
Filer:	Kent Bryan Chambers/Terri Munoz
Attorney Docket Number:	85160.924/T00071

Filed as Large Entity

Utility Filing Fees

Description	Fee Code	Quantity	Amount	Sub-Total in USD($)
Basic Filing:				
Pages:				
Claims:				
Miscellaneous-Filing:				
Petition:				
Patent-Appeals-and-Interference:				
Post-Allowance-and-Post-Issuance:				
Extension-of-Time:				

Description	Fee Code	Quantity	Amount	Sub-Total in USD($)
Miscellaneous:				
Submission- Information Disclosure Stmt	1806	1	180	180
		Total in USD ($)		**180**

Electronic Acknowledgement Receipt

EFS ID:	1251224
Application Number:	09810514
Confirmation Number:	6193
Title of Invention:	Method and system for managing distributor information
First Named Inventor:	David Chao
Customer Number:	33438
Filer:	Kent Bryan Chambers/Terri Munoz
Filer Authorized By:	Kent Bryan Chambers
Attorney Docket Number:	85160.924/T00071
Receipt Date:	13-OCT-2006
Filing Date:	15-MAR-2001
Time Stamp:	10:00:09
Application Type:	Utility
International Application Number:	

Payment information:

Submitted with Payment	yes
Payment was successfully received in RAM	$180
RAM confirmation Number	899
Deposit Account	

File Listing:

Document Number	Document Description	File Name Ex. 1002 295/597	File Size(Bytes)	Multi Part	Pages

1	Information Disclosure Statement (IDS) Filed	T00071_IDS.pdf	129147	no	2
Warnings:					
Information:					
This is not an USPTO supplied IDS fillable form					
2	Information Disclosure Statement (IDS) Filed	7016871.pdf	999140	no	20
Warnings:					
Information:					
This is not an USPTO supplied IDS fillable form					
3	Information Disclosure Statement (IDS) Filed	20020055850.pdf	544035	no	10
Warnings:					
Information:					
This is not an USPTO supplied IDS fillable form					
4	Information Disclosure Statement (IDS) Filed	20020120476.pdf	1179421	no	14
Warnings:					
Information:					
This is not an USPTO supplied IDS fillable form					
5	NPL Documents	Digicontracts1.pdf	375312	no	1
Warnings:					
Information:					
6	NPL Documents	Digicontracts2.pdf	432586	no	1
Warnings:					
Information:					
7	Fee Worksheet (PTO-875)	fee-info.pdf	8164	no	2
Warnings:					
Information:					
		Total Files Size (in bytes):	3667805		

This Acknowledgement Receipt evidences receipt on the noted date by the USPTO of the indicated documents, characterized by the applicant, and including page counts, where applicable. It serves as evidence of receipt similar to a Post Card, as described in MPEP 503.

New Applications Under 35 U.S.C. 111

If a new application is being filed and the application includes the necessary components for a filing date (see 37 CFR 1.53(b)-(d) and MPEP 506), a Filing Receipt (37 CFR 1.54) will be issued in due course and the date shown on this Acknowledgement Receipt will establish the filing date of the application.

National Stage of an International Application under 35 U.S.C. 371

If a timely submission to enter the national stage of an international application is compliant with the conditions of 35 U.S.C. 371 and other applicable requirements a Form PCT/DO/EO/903 indicating acceptance of the application as a national stage submission under 35 U.S.C. 371 will be issued in addition to the Filing Receipt, in due course.

UNITED STATES PATENT AND TRADEMARK OFFICE

UNITED STATES DEPARTMENT OF COMMERCE
United States Patent and Trademark Office
Address: COMMISSIONER FOR PATENTS
P.O. Box 1450
Alexandria, Virginia 22313-1450
www.uspto.gov

APPLICATION NO.	FILING DATE	FIRST NAMED INVENTOR	ATTORNEY DOCKET NO.	CONFIRMATION NO.
09/810,514	03/15/2001	David Chao	85160.924/T00071	6193

33438 7590 03/01/2007

HAMILTON & TERRILE, LLP
P.O. BOX 203518
AUSTIN, TX 78720

EXAMINER	
RUDY, ANDREW J	
ART UNIT	**PAPER NUMBER**
3627	

SHORTENED STATUTORY PERIOD OF RESPONSE	MAIL DATE	DELIVERY MODE
3 MONTHS	03/01/2007	PAPER

Please find below and/or attached an Office communication concerning this application or proceeding.

If NO period for reply is specified above, the maximum statutory period will apply and will expire 6 MONTHS from the mailing date of this communication.

Office Action Summary	Application No.	Applicant(s)	
	09/810,514	CHAO ET AL.	
	Examiner	Art Unit	
	Andrew Joseph Rudy	3627	

-- The MAILING DATE of this communication appears on the cover sheet with the correspondence address --

Period for Reply

A SHORTENED STATUTORY PERIOD FOR REPLY IS SET TO EXPIRE 3 MONTH(S) OR THIRTY (30) DAYS, WHICHEVER IS LONGER, FROM THE MAILING DATE OF THIS COMMUNICATION.

- Extensions of time may be available under the provisions of 37 CFR 1.136(a). In no event, however, may a reply be timely filed after SIX (6) MONTHS from the mailing date of this communication.
- If NO period for reply is specified above, the maximum statutory period will apply and will expire SIX (6) MONTHS from the mailing date of this communication.
- Failure to reply within the set or extended period for reply will, by statute, cause the application to become ABANDONED (35 U.S.C. § 133). Any reply received by the Office later than three months after the mailing date of this communication, even if timely filed, may reduce any earned patent term adjustment. See 37 CFR 1.704(b).

Status

1)☒ Responsive to communication(s) filed on *06 March 2006*.

2a)☒ This action is **FINAL**. 2b)☐ This action is non-final.

3)☐ Since this application is in condition for allowance except for formal matters, prosecution as to the merits is closed in accordance with the practice under *Ex parte Quayle*, 1935 C.D. 11, 453 O.G. 213.

Disposition of Claims

4)☒ Claim(s) *1-64* is/are pending in the application.

4a) Of the above claim(s) *43-64* is/are withdrawn from consideration.

5)☐ Claim(s) _____ is/are allowed.

6)☒ Claim(s) *1-42* is/are rejected.

7)☐ Claim(s) _____ is/are objected to.

8)☐ Claim(s) _____ are subject to restriction and/or election requirement.

Application Papers

9)☐ The specification is objected to by the Examiner.

10)☐ The drawing(s) filed on _____ is/are: a)☐ accepted or b)☐ objected to by the Examiner.

Applicant may not request that any objection to the drawing(s) be held in abeyance. See 37 CFR 1.85(a).

Replacement drawing sheet(s) including the correction is required if the drawing(s) is objected to. See 37 CFR 1.121(d).

11)☐ The oath or declaration is objected to by the Examiner. Note the attached Office Action or form PTO-152.

Priority under 35 U.S.C. § 119

12)☐ Acknowledgment is made of a claim for foreign priority under 35 U.S.C. § 119(a)-(d) or (f).

a)☐ All b)☐ Some * c)☐ None of:

1.☐ Certified copies of the priority documents have been received.

2.☐ Certified copies of the priority documents have been received in Application No. _____.

3.☐ Copies of the certified copies of the priority documents have been received in this National Stage application from the International Bureau (PCT Rule 17.2(a)).

* See the attached detailed Office action for a list of the certified copies not received.

Attachment(s)

1) ☐ Notice of References Cited (PTO-892)
2) ☐ Notice of Draftsperson's Patent Drawing Review (PTO-948)
3) ☒ Information Disclosure Statement(s) (PTO/SB/08) Paper No(s)/Mail Date _____.
4) ☐ Interview Summary (PTO-413) Paper No(s)/Mail Date. _____ .
5) ☐ Notice of Informal Patent Application
6) ☐ Other: _____.

DETAILED ACTION

1. Claims 43-64 remain withdrawn from consideration as drawn to a non-elected invention.

Claim Rejections - 35 USC § 103

2. Claims 1-42 are rejected under 35 U.S.C. 103(a) as being unpatentable over Carrott, US 6,782,369.

Carrott discloses a method for configuring compensations, providing financial service companies a toolkit for creating and modeling commission schedules used to compensate their sales force, e.g. Figs. 1-5. Carrott discloses a processor, e.g. 500, a memory, e.g. 500, a plurality of modules, e.g. cols. 5-7, lines 65-26, distributors, and licenses, e.g. col. 12, lines 60-67. Carrott does not disclose the term selling agreement associated with a valid license. However, Carrott does disclose a commission received for each sale completed. Official Notice is taken that selling agreements associated with a sales agent having a valid licenses has been common knowledge in the sales transaction art. To have provided such for Carrot would have been obvious to one of ordinary skill in the art. The motivation for having provides such would have been to incorporate common knowledge association means to track sales personal and their productivity. Similarly, Official Notice is taken that document components, life insurance, advances, payment rules, repayments, workflow events have been common knowledge in the sales transaction art. To have provide such for Carrott would have been obvious to one of ordinary skill in the art.

Applicant's July 14, 2004 REMARKS are noted, but not convincing. In short, the features Applicant references have all been common knowledge in the transaction art between multiple parties. To automate a well known complex manual process is not a basis for patentability. See, In re Venner, 262, F.2d 91, 95, 120, USPQ 193, 194 (CCPA 1958). Applicant has in effect, automated an otherwise manual method and the result is the same whether done manually or automatically. Thus, Carrott, in view of common knowledge, is viewed to obviate Applicant's claim language and is not an impermissible use of hindsight.

Conclusion

3. **THIS ACTION IS MADE FINAL.** Applicant is reminded of the extension of time policy as set forth in 37 CFR 1.136(a).

A shortened statutory period for reply to this final action is set to expire THREE MONTHS from the mailing date of this action. In the event a first reply is filed within TWO MONTHS of the mailing date of this final action and the advisory action is not mailed until after the end of the THREE-MONTH shortened statutory period, then the shortened statutory period will expire on the date the advisory action is mailed, and any extension fee pursuant to 37 CFR 1.136(a) will be calculated from the mailing date of the advisory action. In no event, however, will the statutory period for reply expire later than SIX MONTHS from the mailing date of this final action.

4. Any inquiry concerning this communication or earlier communications from the examiner should be directed to Andrew Joseph Rudy whose telephone number is 571-272-6789. The examiner can normally be reached on Monday thru Friday.

If attempts to reach the examiner by telephone are unsuccessful, the examiner's supervisor, Ryan M. Zeender can be reached on 571-272-6790. The fax phone number for the organization where this application or proceeding is assigned is 571-273-8300.

Information regarding the status of an application may be obtained from the Patent Application Information Retrieval (PAIR) system. Status information for published applications may be obtained from either Private PAIR or Public PAIR. Status information for unpublished applications is available through Private PAIR only. For more information about the PAIR system, see http://pair-direct.uspto.gov. Should you have questions on access to the Private PAIR system, contact the Electronic Business Center (EBC) at 866-217-9197 (toll-free). If you would like assistance from a USPTO Customer Service Representative or access to the automated information system, call 800-786-9199 (IN USA OR CANADA) or 571-272-1000.

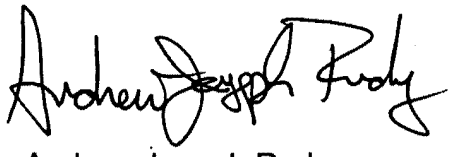

Andrew Joseph Rudy
Primary Examiner
Art Unit 3627

U.S. Department of Commerce, Patent and Trademark Office	Attorney Docket No.	Serial No.
	T00071	09/810,514
INFORMATION DISCLOSURE STATEMENT BY APPLICANT	Applicant(s)	
(Use several sheets if necessary)	David Chao, et al.	
	Filing Date	Group
	March 15, 2001	3627

OIPE IAP50 JUN 09 2006 PATENT & TRADEMARK OFFICE

U.S. Patent Documents

*Examiner Initial		Document Number	Date	Name	Class	Subclass	Filing Date If Appropriate
MSL	AA	6,682,571	03/2005	Martin et al.	705	4	
	AB	6,671,818	12/2003	Mikurak	714	4	
	AC	6,618,706	09/2003	Rive et al.	705	30	
	AD	6,606,744	08/2003	Mikurak	717	174	
	AE	6,473,609	10/2002	Schwartz et al.	455	406	
	AF	6,105,001	08/2000	Masi et al.	705	14	
	AG	6,415,265	07/2002	Shell et al.	705	26	
	AH	6,377,956	04/2002	Hsu et al.	707	104.1	
	AI	6,351,812	02/2002	Datar et al.	713	182	
✓	AJ	2001/0049622	12/2001	Gozdeck et al.	705	11	
MSL	AK	2001/0039547	11/2001	Black et al.	707	102	

Foreign Patent Documents

							Translation	
		Document	Date	Country	Class	Subclass	Yes	No
	AL						☐	☐
	AM						☐	☐
	AN						☐	☐
	AO							
	AP							

OTHER ART (Including Author, Title, Date, Pertinent Pages, Etc.)

	AR	
	AS	
	AT	

Examiner Andrew Joseph Rudy | Date Considered February 15, 2007

*EXAMINER: Initial if reference considered, whether or not citation is in conformance with MPEP 609; Draw line through citation if not in conformance and not considered. Include copy of this form with your communication to applicant.

U.S. Department of Commerce, Patent and Trademark Office	Attorney Docket No.	Serial No.
	T00071	09/810,514
INFORMATION DISCLOSURE STATEMENT BY APPLICANT	Applicant(s)	
(Use several sheets if necessary)	David Chao, et al.	
	Filing Date	Group
	March 15, 2001	3627

OIPE JUN 09 2006 PATENT & TRADEMARK OFFICE USPS

U.S. Patent Documents

*Examiner Initial		Document Number	Date	Name	Class	Subclass	Filing Date If Appropriate
ASP	AA	2001/0037265	11/2001	Kleinberg	705	27	
	AB	6,134,533	10/2000	Shell	705	26	
	AC	6,065,026	05/2000	Cornelia et al.	715	531	
	AD	5,864,620	01/1999	Pettit	705	54	
ASP	AE	5,181,162	01/1993	Smith et al.	715	530	
	AF						
	AG						
	AH						
	AI						
	AJ						
	AK						

Foreign Patent Documents

							Translation	
		Document	Date	Country	Class	Subclass	Yes	No
	AL						☐	☐
	AM						☐	☐
	AN						☐	☐
	AO							
	AP							

OTHER ART (Including Author, Title, Date, Pertinent Pages, Etc.)

	AR	
	AS	
	AT	

Examiner Andrew Joseph Rudy | Date Considered February 15, 2007

*EXAMINER: Initial if reference considered, whether or not citation is in conformance with MPEP 609; Draw line through citation if not in conformance and not considered. Include copy of this form with your communication to applicant.

U.S. Department of Commerce, Patent and Trademark Office	Attorney Docket No.	Serial No.
	T00071	09/810,514
INFORMATION DISCLOSURE STATEMENT BY APPLICANT	Applicant(s)	
(Use several sheets if necessary)	David Chao, et al.	
	Filing Date	Group
	March 15, 2001	3627

U.S. Patent Documents

*Examiner Initial		Document Number	Date	Name	Class	Subclass	Filing Date If Appropriate
ASR	AA	US-6,055,637	04-2000	Hudson et al.	726	20	
✓	AB	US-6,662,164	12-2003	Koppelman et al.	705	14	
✓	AC	US-6,778,880	08-2004	Okamura, Eiji	700	226	
ASR	AD	US-6,986,038	01-2006	Leah et al.	713	155	
	AE						
	AF						
	AG						
	AH						
	AI						
	AJ						
	AK						

Foreign Patent Documents

							Translation	
		Document	Date	Country	Class	Subclass	Yes	No
	AL						☐	☐
	AM						☐	☐
	AN						☐	☐
	AO							
	AP							

OTHER ART (Including Author, Title, Date, Pertinent Pages, Etc.)

	AR	
	AS	
	AT	

Examiner Andrew Joseph Rudy | Date Considered February 15, 2007

*EXAMINER: Initial if reference considered, whether or not citation is in conformance with MPEP 609; Draw line through citation if not in conformance and not considered. Include copy of this form with your communication to applicant.

U.S. Department of Commerce, Patent and Trademark Office	Attorney Docket No.	Serial No.
	T00071	09/810,514
INFORMATION DISCLOSURE STATEMENT BY APPLICANT	Applicant(s)	
(Use several sheets if necessary)	David Chao, et al.	
	Filing Date	Group
	March 15, 2001	3627

U.S. Patent Documents

*Examiner Initial		Document Number	Date	Name	Class	Subclass	Filing Date If Appropriate
AJR	AA	6,751,596	06/2004	Hastings, Brian	705	10	
	AB						
	AC						
	AD						
	AE						
	AF						
	AG						
	AH						
	AI						
	AJ						
	AK						

Foreign Patent Documents

							Translation	
		Document	Date	Country	Class	Subclass	Yes	No
	AL						☐	☐
	AM						☐	☐
	AN						☐	☐
	AO							
	AP							

OTHER ART (Including Author, Title, Date, Pertinent Pages, Etc.)

	AR	
	AS	
	AT	

Examiner Andrew Joseph Rudy | Date Considered February 15, 2007

*EXAMINER: Initial if reference considered, whether or not citation is in conformance with MPEP 609; Draw line through citation if not in conformance and not considered. Include copy of this form with your communication to applicant.

U.S. Department of Commerce, Patent and Trademark Office	Attorney Docket No.	Serial No.
	T00071	09/810,514
INFORMATION DISCLOSURE STATEMENT BY APPLICANT	Applicant(s)	
(Use several sheets if necessary)	David Chao, et al.	
	Filing Date	Group
	March 15, 2001	3627

U.S. Patent Documents

*Examiner Initial		Document Number	Date	Name	Class	Subclass	Filing Date If Appropriate
ASL	AA	2002/0055850	05/2002	Powell et al.	705	1	
ASL	AB	2002/0120476	08/2002	Labelle et al.	705	4	
ASL	AC	7,016,871	03/2006	Fisher et al.	705	35	
	AD						
	AE						
	AF						
	AG						
	AH						
	AI						
	AJ						
	AK						

Foreign Patent Documents

							Translation	
		Document	Date	Country	Class	Subclass	Yes	No
	AL						☐	☐
	AM						☐	☐
	AN						☐	☐
	AO							
	AP							

OTHER ART (Including Author, Title, Date, Pertinent Pages, Etc.)

	AR	Contractmaker, http:/web.archive.org/web/20010204115100/http://www.digicontracts.com, dated February 4, 2001
	AS	Contractmaker, http:/web.archive.org/web/20010303160139/www.digicontracts.com/lits/libdocumenu.html, dated March 3, 2001
	AT	

Examiner Andrew Joseph Rudy | Date Considered February 15, 2007

*EXAMINER: Initial if reference considered, whether or not citation is in conformance with MPEP 609; Draw line through citation if not in conformance and not considered. Include copy of this form with your communication to applicant.

Index of Claims

Application/Control No.	Applicant(s)/Patent under Reexamination
09/810,514	CHAO ET AL.
Examiner	**Art Unit**
Andrew Joseph Rudy	3627

√	Rejected	–	(Through numeral) Cancelled	N	Non-Elected	A	Appeal
=	Allowed	÷	Restricted	I	Interference	O	Objected

Claim		Date
Final	Original	2/15/07
	1	✓
	2	↑
	3	
	4	
	5	
	6	
	7	
	8	
	9	
	10	
	11	
	12	
	13	
	14	
	15	
	16	
	17	
	18	
	19	
	20	
	21	
	22	
	23	
	24	
	25	
	26	
	27	
	28	
	29	
	30	
	31	
	32	
	33	
	34	
	35	
	36	
	37	
	38	
	39	
	40	
	41	✓
	42	✓
	43	N
	44	↑
	45	
	46	
	47	
	48	
	49	✓
	50	N

Claim		Date
Final	Original	2/15/07
	51	N
	52	↑
	53	
	54	
	55	
	56	
	57	
	58	
	59	
	60	
	61	
	62	
	63	✓
	64	N
	65	
	66	
	67	
	68	
	69	
	70	
	71	
	72	
	73	
	74	
	75	
	76	
	77	
	78	
	79	
	80	
	81	
	82	
	83	
	84	
	85	
	86	
	87	
	88	
	89	
	90	
	91	
	92	
	93	
	94	
	95	
	96	
	97	
	98	
	99	
	100	

Claim		Date
Final	Original	
	101	
	102	
	103	
	104	
	105	
	106	
	107	
	108	
	109	
	110	
	111	
	112	
	113	
	114	
	115	
	116	
	117	
	118	
	119	
	120	
	121	
	122	
	123	
	124	
	125	
	126	
	127	
	128	
	129	
	130	
	131	
	132	
	133	
	134	
	135	
	136	
	137	
	138	
	139	
	140	
	141	
	142	
	143	
	144	
	145	
	146	
	147	
	148	
	149	
	150	

Search Notes

Application/Control No.	Applicant(s)/Patent under Reexamination	
09/810,514	CHAO ET AL.	
Examiner	**Art Unit**	
Andrew Joseph Rudy	3627	

SEARCHED			
Class	Subclass	Date	Examiner

INTERFERENCE SEARCHED			
Class	Subclass	Date	Examiner

SEARCH NOTES (INCLUDING SEARCH STRATEGY)		
	DATE	EXMR
East: relevant terms searched.	2/15/2007	AJR

IN THE UNITED STATES PATENT AND TRADEMARK OFFICE

Applicants:	David Chao, Brian Blount, Charles Erickson, Shari Gharavy, Cheng Zhou, Joshua Toub		
Assignee:	Trilogy Development Group, Inc.		
Title:	METHOD AND SYSTEM FOR MANAGING DISTRIBUTOR INFORMATION		
Serial No.:	09/810,514	Filing Date:	March 15, 2001
Examiner:	Andrew J. Rudy	Group Art Unit:	3627
Docket No.:	T00071	Customer No.:	33438

Austin, Texas
March 21, 2007

FILED ELECTRONICALLY

INFORMATION DISCLOSURE STATEMENT WITH FEE

Sir:

Pursuant to 37 C.F.R. § 1.56, § 1.97 and § 1.98, Applicants wish to call the following documents to the attention of the Examiner.

A PTO form 1449 listing these documents is enclosed.

Citation of the above documents shall not be construed as:

1. an admission that the documents are necessarily prior art with respect to the instant invention;
2. a representation that a search has been made, other than as described above; or
3. an admission that the information cited herein is, or is considered to be, material to patentability as defined in § 1.56(b).

The Information Disclosure Statement fee is being paid via the USPTO-EFS. The Commissioner is hereby authorized to charge any additional fees which may be required, or credit any overpayment to Deposit Account 502264.

ELECTRONICALLY FILLED
March 21, 2007

Respectfully submitted,

/Kent B. Chambers/

Kent B. Chambers
Attorney for Applicant(s)
Reg. No. 38,839

U.S. Department of Commerce, Patent and Trademark Office	Attorney Docket No.	Serial No.
	T00071	09/810,514
INFORMATION DISCLOSURE STATEMENT BY APPLICANT	Applicant(s)	
(Use several sheets if necessary)	David Chao, et al.	
	Filing Date	Group
	March 15, 2001	3627

U.S. Patent Documents

*Examiner Initial		Document Number	Date	Name	Class	Subclass	Filing Date If Appropriate
	AA	7,133,845	11/2006	Ginter et al.	705	51	
	AB	7,089,315	08/2006	Nuttall Franc	709	229	
	AC	7,069,235	06/2006	Postelnik et al.	705	26	
	AD	6,999,946	02/2006	Nuttall, Franc	705	52	
	AE	6,889,206	05/2005	Nutall, Francois-Xavier	705	52	
	AF	6,510,513	01/2003	Danieli, Damon V.	713	156	
	AG	5,790,677	08/1998	Fox et al.	705	78	
	AH						
	AI						
	AJ						
	AK						

Foreign Patent Documents

							Translation	
		Document	Date	Country	Class	Subclass	Yes	No
	AL						☐	☐
	AM						☐	☐
	AN						☐	☐
	AO							
	AP							

OTHER ART (Including Author, Title, Date, Pertinent Pages, Etc.)

	AR	
	AS	
	AT	

Examiner	Date Considered

*EXAMINER: Initial if reference considered, whether or not citation is in conformance with MPEP 609; Draw line through citation if not in conformance and not considered. Include copy of this form with your communication to applicant.

Electronic Patent Application Fee Transmittal

Application Number:	09810514
Filing Date:	15-Mar-2001
Title of Invention:	Method and system for managing distributor information
First Named Inventor/Applicant Name:	David Chao
Filer:	Kent Bryan Chambers/Terri Munoz
Attorney Docket Number:	85160.924/T00071

Filed as Large Entity

Utility Filing Fees

Description	Fee Code	Quantity	Amount	Sub-Total in USD($)
Basic Filing:				
Pages:				
Claims:				
Miscellaneous-Filing:				
Petition:				
Patent-Appeals-and-Interference:				
Post-Allowance-and-Post-Issuance:				
Extension-of-Time:				

Description	Fee Code	Quantity	Amount	Sub-Total in USD($)
Miscellaneous:				
Submission- Information Disclosure Stmt	1806	1	180	180
		Total in USD ($)		**180**

Electronic Acknowledgement Receipt

EFS ID:	1610880
Application Number:	09810514
International Application Number:	
Confirmation Number:	6193
Title of Invention:	Method and system for managing distributor information
First Named Inventor/Applicant Name:	David Chao
Customer Number:	33438
Filer:	Kent Bryan Chambers/Terri Munoz
Filer Authorized By:	Kent Bryan Chambers
Attorney Docket Number:	85160.924/T00071
Receipt Date:	21-MAR-2007
Filing Date:	15-MAR-2001
Time Stamp:	13:30:28
Application Type:	Utility

Payment information:

Submitted with Payment	yes
Payment was successfully received in RAM	$180
RAM confirmation Number	1916
Deposit Account	

File Listing:

Document Number	Document Description	File Name	File Size(Bytes)	Multi Part /.zip	Pages (if appl.)

1	Information Disclosure Statement (IDS) Filed	T00071_IDS.pdf	29378	no	2
Warnings:					
Information:					
This is not an USPTO supplied IDS fillable form					
2	Fee Worksheet (PTO-06)	fee-info.pdf	8175	no	2
Warnings:					
Information:					
			Total Files Size (in bytes):	37553	

This Acknowledgement Receipt evidences receipt on the noted date by the USPTO of the indicated documents, characterized by the applicant, and including page counts, where applicable. It serves as evidence of receipt similar to a Post Card, as described in MPEP 503.

New Applications Under 35 U.S.C. 111
If a new application is being filed and the application includes the necessary components for a filing date (see 37 CFR 1.53(b)-(d) and MPEP 506), a Filing Receipt (37 CFR 1.54) will be issued in due course and the date shown on this Acknowledgement Receipt will establish the filing date of the application.

National Stage of an International Application under 35 U.S.C. 371
If a timely submission to enter the national stage of an international application is compliant with the conditions of 35 U.S.C. 371 and other applicable requirements a Form PCT/DO/EO/903 indicating acceptance of the application as a national stage submission under 35 U.S.C. 371 will be issued in addition to the Filing Receipt, in due course.

New International Application Filed with the USPTO as a Receiving Office
If a new international application is being filed and the international application includes the necessary components for an international filing date (see PCT Article 11 and MPEP 1810), a Notification of the International Application Number and of the International Filing Date (Form PCT/RO/105) will be issued in due course, subject to prescriptions concerning national security, and the date shown on this Acknowledgement Receipt will establish the international filing date of the application.

IN THE UNITED STATES PATENT AND TRADEMARK OFFICE

Applicants:	David Chao, Brian Blount, Charles Erickson, Shari Gharavy, Cheng Zhou, Joshua Toub		
Assignee:	Trilogy Development Group, Inc.		
Title:	METHOD AND SYSTEM FOR MANAGING DISTRIBUTOR INFORMATION		
Serial No.:	09/810,514	Filing Date:	March 15, 2001
Examiner:	Andrew J. Rudy	Group Art Unit:	3627
Docket No.:	T00071	Customer No.:	33438

Austin, Texas
April 16, 2007

FILED ELECTRONICALLY

INFORMATION DISCLOSURE STATEMENT WITH FEE

Sir:

Pursuant to 37 C.F.R. § 1.56, § 1.97 and § 1.98, Applicants wish to call the following documents to the attention of the Examiner.

A PTO form 1449 listing these documents is enclosed.

Citation of the above documents shall not be construed as:

1. an admission that the documents are necessarily prior art with respect to the instant invention;
2. a representation that a search has been made, other than as described above; or
3. an admission that the information cited herein is, or is considered to be, material to patentability as defined in § 1.56(b).

The Information Disclosure Statement fee is being paid via the USPTO-EFS. The Commissioner is hereby authorized to charge any additional fees which may be required, or credit any overpayment to Deposit Account 502264.

ELECTRONICALLY FILLED
April 16, 2007

Respectfully submitted,

/Kent B. Chambers/

Kent B. Chambers
Attorney for Applicant(s)
Reg. No. 38,839

U.S. Department of Commerce, Patent and Trademark Office	Attorney Docket No.	Serial No.
	T00071	09/810,514
INFORMATION DISCLOSURE STATEMENT BY APPLICANT	Applicant(s)	
(Use several sheets if necessary)	David Chao, et al.	
	Filing Date	Group
	March 15, 2001	3627

U.S. Patent Documents

*Examiner Initial		Document Number	Date	Name	Class	Subclass	Filing Date If Appropriate
	AA						
	AB						
	AC						
	AD						
	AE						
	AF						
	AG						
	AH						
	AI						
	AJ						
	AK						

Foreign Patent Documents

							Translation	
		Document	Date	Country	Class	Subclass	Yes	No
	AL						☐	☐
	AM						☐	☐
	AN						☐	☐
	AO							
	AP							

OTHER ART (Including Author, Title, Date, Pertinent Pages, Etc.)

	AR	Powell et al., U.S. Patent Application Serial No. 60/216,913, filed July 6, 2000, entitled "Transactional Processing Exchange System and Methods"
	AS	
	AT	

Examiner	Date Considered

*EXAMINER: Initial if reference considered, whether or not citation is in conformance with MPEP 609; Draw line through citation if not in conformance and not considered. Include copy of this form with your communication to applicant.

Electronic Patent Application Fee Transmittal

Application Number:	09810514
Filing Date:	15-Mar-2001
Title of Invention:	Method and system for managing distributor information
First Named Inventor/Applicant Name:	David Chao
Filer:	Kent Bryan Chambers/Terri Munoz
Attorney Docket Number:	85160.924/T00071

Filed as Large Entity

Utility Filing Fees

Description	Fee Code	Quantity	Amount	Sub-Total in USD($)
Basic Filing:				
Pages:				
Claims:				
Miscellaneous-Filing:				
Petition:				
Patent-Appeals-and-Interference:				
Post-Allowance-and-Post-Issuance:				
Extension-of-Time:				

Description	Fee Code	Quantity	Amount	Sub-Total in USD($)
Miscellaneous:				
Submission- Information Disclosure Stmt	1806	1	180	180
		Total in USD ($)		**180**

Electronic Acknowledgement Receipt

EFS ID:	1685547
Application Number:	09810514
International Application Number:	
Confirmation Number:	6193
Title of Invention:	Method and system for managing distributor information
First Named Inventor/Applicant Name:	David Chao
Customer Number:	33438
Filer:	Kent Bryan Chambers/Terri Munoz
Filer Authorized By:	Kent Bryan Chambers
Attorney Docket Number:	85160.924/T00071
Receipt Date:	16-APR-2007
Filing Date:	15-MAR-2001
Time Stamp:	15:11:23
Application Type:	Utility

Payment information:

Submitted with Payment	yes
Payment was successfully received in RAM	$180
RAM confirmation Number	89
Deposit Account	

File Listing:

Document Number	Document Description	File Name	File Size(Bytes)	Multi Part /.zip	Pages (if appl.)

1	Information Disclosure Statement (IDS) Filed	T00071_IDS8.pdf	29450	no	2
Warnings:					
Information:					
This is not an USPTO supplied IDS fillable form					
2	Fee Worksheet (PTO-06)	fee-info.pdf	8175	no	2
Warnings:					
Information:					
			Total Files Size (in bytes):	37625	

This Acknowledgement Receipt evidences receipt on the noted date by the USPTO of the indicated documents, characterized by the applicant, and including page counts, where applicable. It serves as evidence of receipt similar to a Post Card, as described in MPEP 503.

New Applications Under 35 U.S.C. 111
If a new application is being filed and the application includes the necessary components for a filing date (see 37 CFR 1.53(b)-(d) and MPEP 506), a Filing Receipt (37 CFR 1.54) will be issued in due course and the date shown on this Acknowledgement Receipt will establish the filing date of the application.

National Stage of an International Application under 35 U.S.C. 371
If a timely submission to enter the national stage of an international application is compliant with the conditions of 35 U.S.C. 371 and other applicable requirements a Form PCT/DO/EO/903 indicating acceptance of the application as a national stage submission under 35 U.S.C. 371 will be issued in addition to the Filing Receipt, in due course.

New International Application Filed with the USPTO as a Receiving Office
If a new international application is being filed and the international application includes the necessary components for an international filing date (see PCT Article 11 and MPEP 1810), a Notification of the International Application Number and of the International Filing Date (Form PCT/RO/105) will be issued in due course, subject to prescriptions concerning national security, and the date shown on this Acknowledgement Receipt will establish the international filing date of the application.

IN THE UNITED STATES PATENT AND TRADEMARK OFFICE

Applicants:	David Chao, Brian Blount, Charles Erickson, Shari Gharavy, Cheng Zhou, Joshua Toub		
Assignee:	Trilogy Development Group, Inc.		
Title:	METHOD AND SYSTEM FOR MANAGING DISTRIBUTOR INFORMATION		
Serial No.:	09/810,514	Filing Date:	March 15, 2001
Examiner:	Andrew J. Rudy	Group Art Unit:	3627
Docket No.:	T00071	Customer No.:	33438

Austin, Texas
April 25, 2007

FILED ELECTRONICALLY

INFORMATION DISCLOSURE STATEMENT WITH FEE

Sir:

Pursuant to 37 C.F.R. § 1.56, § 1.97 and § 1.98, Applicants wish to call the following documents to the attention of the Examiner.

A PTO form 1449 listing these documents is enclosed.

Citation of the above documents shall not be construed as:

1. an admission that the documents are necessarily prior art with respect to the instant invention;
2. a representation that a search has been made, other than as described above; or
3. an admission that the information cited herein is, or is considered to be, material to patentability as defined in § 1.56(b).

The Information Disclosure Statement fee is being paid via the USPTO-EFS. The Commissioner is hereby authorized to charge any additional fees which may be required, or credit any overpayment to Deposit Account 502264.

ELECTRONICALLY FILLED
April 25, 2007

Respectfully submitted,

/Kent B. Chambers/

Kent B. Chambers
Attorney for Applicant(s)
Reg. No. 38,839

U.S. Department of Commerce, Patent and Trademark Office	Attorney Docket No.	Serial No.
	T00071	09/810,514
INFORMATION DISCLOSURE STATEMENT BY APPLICANT	Applicant(s)	
(Use several sheets if necessary)	David Chao, et al.	
	Filing Date	Group
	March 15, 2001	3627

U.S. Patent Documents

*Examiner Initial		Document Number	Date	Name	Class	Subclass	Filing Date If Appropriate
	AA	2001/0032094	10/2001	Ghosh et al.	705	1	
	AB						
	AC						
	AD						
	AE						
	AF						
	AG						
	AH						
	AI						
	AJ						
	AK						

Foreign Patent Documents

							Translation	
		Document	Date	Country	Class	Subclass	Yes	No
	AL						☐	☐
	AM						☐	☐
	AN						☐	☐
	AO							
	AP							

OTHER ART (Including Author, Title, Date, Pertinent Pages, Etc.)

	AR	
	AS	
	AT	

Examiner	Date Considered

*EXAMINER: Initial if reference considered, whether or not citation is in conformance with MPEP 609; Draw line through citation if not in conformance and not considered. Include copy of this form with your communication to applicant.

Electronic Patent Application Fee Transmittal

Application Number:	09810514
Filing Date:	15-Mar-2001
Title of Invention:	Method and system for managing distributor information
First Named Inventor/Applicant Name:	David Chao
Filer:	Kent Bryan Chambers/Terri Munoz
Attorney Docket Number:	85160.924/T00071

Filed as Large Entity

Utility Filing Fees

Description	Fee Code	Quantity	Amount	Sub-Total in USD($)
Basic Filing:				
Pages:				
Claims:				
Miscellaneous-Filing:				
Petition:				
Patent-Appeals-and-Interference:				
Post-Allowance-and-Post-Issuance:				
Extension-of-Time:				

Description	Fee Code	Quantity	Amount	Sub-Total in USD($)
Miscellaneous:				
Submission- Information Disclosure Stmt	1806	1	180	180
		Total in USD ($)		**180**

Electronic Acknowledgement Receipt

EFS ID:	1713965
Application Number:	09810514
International Application Number:	
Confirmation Number:	6193
Title of Invention:	Method and system for managing distributor information
First Named Inventor/Applicant Name:	David Chao
Customer Number:	33438
Filer:	Kent Bryan Chambers/Terri Munoz
Filer Authorized By:	Kent Bryan Chambers
Attorney Docket Number:	85160.924/T00071
Receipt Date:	25-APR-2007
Filing Date:	15-MAR-2001
Time Stamp:	11:44:01
Application Type:	Utility

Payment information:

Submitted with Payment	yes
Payment was successfully received in RAM	$180
RAM confirmation Number	1684
Deposit Account	

File Listing:

Document Number	Document Description	File Name	File Size(Bytes)	Multi Part /.zip	Pages (if appl.)

1	Information Disclosure Statement (IDS) Filed	T00071_IDS9.pdf	29000	no	2
Warnings:					
Information:					
This is not an USPTO supplied IDS fillable form					
2	Fee Worksheet (PTO-06)	fee-info.pdf	8175	no	2
Warnings:					
Information:					
			Total Files Size (in bytes):	37175	

This Acknowledgement Receipt evidences receipt on the noted date by the USPTO of the indicated documents, characterized by the applicant, and including page counts, where applicable. It serves as evidence of receipt similar to a Post Card, as described in MPEP 503.

New Applications Under 35 U.S.C. 111
If a new application is being filed and the application includes the necessary components for a filing date (see 37 CFR 1.53(b)-(d) and MPEP 506), a Filing Receipt (37 CFR 1.54) will be issued in due course and the date shown on this Acknowledgement Receipt will establish the filing date of the application.

National Stage of an International Application under 35 U.S.C. 371
If a timely submission to enter the national stage of an international application is compliant with the conditions of 35 U.S.C. 371 and other applicable requirements a Form PCT/DO/EO/903 indicating acceptance of the application as a national stage submission under 35 U.S.C. 371 will be issued in addition to the Filing Receipt, in due course.

New International Application Filed with the USPTO as a Receiving Office
If a new international application is being filed and the international application includes the necessary components for an international filing date (see PCT Article 11 and MPEP 1810), a Notification of the International Application Number and of the International Filing Date (Form PCT/RO/105) will be issued in due course, subject to prescriptions concerning national security, and the date shown on this Acknowledgement Receipt will establish the international filing date of the application.

REQUEST FOR CONTINUED EXAMINATION(RCE)TRANSMITTAL
(Submitted Only via EFS-Web)

Application Number	09810514	Filing Date	2001-03-15	Docket Number (if applicable)	T00071	Art Unit	3627
First Named Inventor	David Chao			Examiner Name	Andrew J. Rudy		

This is a Request for Continued Examination (RCE) under 37 CFR 1.114 of the above-identified application.
Request for Continued Examination (RCE) practice under 37 CFR 1.114 does not apply to any utility or plant application filed prior to June 8, 1995, or to any design application. The Instruction Sheet for this form is located at WWW.USPTO.GOV

SUBMISSION REQUIRED UNDER 37 CFR 1.114

Note: If the RCE is proper, any previously filed unentered amendments and amendments enclosed with the RCE will be entered in the order in which they were filed unless applicant instructs otherwise. If applicant does not wish to have any previously filed unentered amendment(s) entered, applicant must request non-entry of such amendment(s).

☐ Previously submitted. If a final Office action is outstanding, any amendments filed after the final Office action may be considered as a submission even if this box is not checked.

- ☐ Consider the arguments in the Appeal Brief or Reply Brief previously filed on _____
- ☐ Other _____

☒ Enclosed

- ☒ Amendment/Reply
- ☐ Information Disclosure Statement (IDS)
- ☐ Affidavit(s)/ Declaration(s)
- ☒ Other Petition for Extension of Time

MISCELLANEOUS

☐ Suspension of action on the above-identified application is requested under 37 CFR 1.103(c) for a period of months _____ (Period of suspension shall not exceed 3 months; Fee under 37 CFR 1.17(i) required)

☐ Other _____

FEES

☒ **The RCE fee under 37 CFR 1.17(e) is required by 37 CFR 1.114 when the RCE is filed.**
The Director is hereby authorized to charge any underpayment of fees, or credit any overpayments, to Deposit Account No 502264

SIGNATURE OF APPLICANT, ATTORNEY, OR AGENT REQUIRED

☒ Patent Practitioner Signature

☐ Applicant Signature

Signature of Registered U.S. Patent Practitioner			
Signature	/Kent B. Chambers/	Date (YYYY-MM-DD)	2007-09-04
Name	Kent B. Chambers	Registration Number	38839

This collection of information is required by 37 CFR 1.114. The information is required to obtain or retain a benefit by the public which is to file (and by the USPTO to process) an application. Confidentiality is governed by 35 U.S.C. 122 and 37 CFR 1.11 and 1.14. This collection is estimated to take 12 minutes to complete, including gathering, preparing, and submitting the completed application form to the USPTO. Time will vary depending upon the individual case. Any comments on the amount of time you require to complete this form and/or suggestions for reducing this burden, should be sent to the Chief Information Officer, U.S. Patent and Trademark Office, U.S. Department of Commerce, P.O. Box 1450, Alexandria, VA 22313-1450.

If you need assistance in completing the form, call 1-800-PTO-9199 and select option 2.

IN THE UNITED STATES PATENT AND TRADEMARK OFFICE

Applicants:	David Chao, Brian Blount, Charles Erickson, Shari Gharavy, Cheng Zhou, Joshua Toub		
Assignee:	Versata Development Group, Inc.		
Title:	METHOD AND SYSTEM FOR MANAGING DISTRIBUTOR INFORMATION		
Serial No.:	09/810,514	Filing Date:	March 15, 2001
Examiner:	Andrew J. Rudy	Group Art Unit:	3627
Docket No.:	T00071	Customer No.:	33438

Austin, Texas
September 4, 2007

FILED ELECTRONICALLY

PETITION FOR EXTENSION OF TIME

Dear Sir:

Applicants respectfully petition for a three (3) month extension of time within which to respond to the March 1, 2007, outstanding Office Action, such extension allowing the undersigned until September 4, 2007 (September 1, 2007 being a Saturday and September 3, 2007 being a Federal Holiday) to respond.

The extension fee is being paid via the USPTO EFS. Please deduct any additional fee which may be necessary or credit any overpayment to Deposit Account No. 502264.

FILED ELECTRONICALLY
September 4, 2007

Respectfully submitted,

/Kent B. Chambers/

Kent B. Chambers
Attorney for Applicant(s)
Reg. No. 38,839

Electronic Patent Application Fee Transmittal

Application Number:	09810514
Filing Date:	15-Mar-2001
Title of Invention:	Method and system for managing distributor information
First Named Inventor/Applicant Name:	David Chao
Filer:	Kent Bryan Chambers
Attorney Docket Number:	T00071

Filed as Large Entity

Utility Filing Fees

Description	Fee Code	Quantity	Amount	Sub-Total in USD($)
Basic Filing:				
Pages:				
Claims:				
Miscellaneous-Filing:				
Petition:				
Patent-Appeals-and-Interference:				
Post-Allowance-and-Post-Issuance:				
Extension-of-Time:				
Extension - 3 months with $0 paid	1253	1	1020	1020

Ex. 1002 331/592

Description	Fee Code	Quantity	Amount	Sub-Total in USD($)
Miscellaneous:				
Request for continued examination	1801	1	790	790
		Total in USD ($)		**1810**

Electronic Acknowledgement Receipt

EFS ID:	2157604
Application Number:	09810514
International Application Number:	
Confirmation Number:	6193
Title of Invention:	Method and system for managing distributor information
First Named Inventor/Applicant Name:	David Chao
Customer Number:	33438
Filer:	Kent Bryan Chambers
Filer Authorized By:	
Attorney Docket Number:	T00071
Receipt Date:	04-SEP-2007
Filing Date:	15-MAR-2001
Time Stamp:	22:58:16
Application Type:	Utility under 35 USC 111(a)

Payment information:

Submitted with Payment	yes
Payment was successfully received in RAM	$1810
RAM confirmation Number	4215
Deposit Account	

File Listing:

Document Number	Document Description	File Name	File Size(Bytes) /Message Digest	Multi Part /.zip	Pages (if appl.)

1	Amendment Submitted/Entered with Filing of CPA/RCE	T00071_RCE_3_1_07.pdf	58353 2e6018563bef604c2a6a317b4cbe30c6c10ff7fb	no	13
Warnings:					
Information:					
2	Request for Continued Examination (RCE)	T00071_RCE_transmittal.pdf	36692 5e63a697da90c9169f11dcbd54f09968e905287a	no	2
Warnings:					
This is not a USPTO supplied RCE SB30 form.					
Information:					
3	Extension of Time	T00071_Extension.pdf	23553 e49a26d9c5c8167a27b2155b5c3e73710645f251	no	1
Warnings:					
Information:					
4	Fee Worksheet (PTO-06)	fee-info.pdf	8293 7568105dabbe52453937d440da08b19bf7501ef9	no	2
Warnings:					
Information:					
			Total Files Size (in bytes):	126891	

This Acknowledgement Receipt evidences receipt on the noted date by the USPTO of the indicated documents, characterized by the applicant, and including page counts, where applicable. It serves as evidence of receipt similar to a Post Card, as described in MPEP 503.

New Applications Under 35 U.S.C. 111
If a new application is being filed and the application includes the necessary components for a filing date (see 37 CFR 1.53(b)-(d) and MPEP 506), a Filing Receipt (37 CFR 1.54) will be issued in due course and the date shown on this Acknowledgement Receipt will establish the filing date of the application.

National Stage of an International Application under 35 U.S.C. 371
If a timely submission to enter the national stage of an international application is compliant with the conditions of 35 U.S.C. 371 and other applicable requirements a Form PCT/DO/EO/903 indicating acceptance of the application as a national stage submission under 35 U.S.C. 371 will be issued in addition to the Filing Receipt, in due course.

New International Application Filed with the USPTO as a Receiving Office
If a new international application is being filed and the international application includes the necessary components for an international filing date (see PCT Article 11 and MPEP 1810), a Notification of the International Application Number and of the International Filing Date (Form PCT/RO/105) will be issued in due course, subject to prescriptions concerning national security, and the date shown on this Acknowledgement Receipt will establish the international filing date of the application.

IN THE UNITED STATES PATENT AND TRADEMARK OFFICE

Applicants:	David Chao, Brian Blount, Charles Erickson, Shari Gharavy, Cheng Zhou, Joshua Toub		
Assignee:	Versata Development Group, Inc.		
Title:	METHOD AND SYSTEM FOR MANAGING DISTRIBUTOR INFORMATION		
Serial No.:	09/810,514	Filing Date:	March 15, 2001
Examiner:	Andrew J. Rudy	Group Art Unit:	3627
Docket No.:	T00071	Customer No.:	33438

Austin, Texas
September 4, 2007

FILED ELECTRONICALLY

37 C.F.R. § 1.114 RCE SUBMISSION

Dear Sir:

This paper is a submission in accordance with 37 C.F.R. § 1.114, which accompanies a request for continued examination in the above referenced patent application. This paper is responsive to the Office Action dated March 1, 2007, having a shortened statutory period expiring on June 1, 2007. Accompanying this response is a petition under 37 C.F.R. § 1.136 for extension of time by three (3) months setting a new time for response of September 4, 2007 (September 1, 2007 being a Saturday and September 3, 2007 being a Federal Holiday). Further examination and reconsideration are respectfully requested in view of the amendments and remarks set forth below.

Ex. 1002 335/597

AMENDMENTS TO THE CLAIMS

1. (Currently Amended) A system for managing relationships between a first party and a second party comprising:

at least one processor;

memory coupled to said at least one processor;

said memory comprising a plurality of modules configured to manage distributor information;

said plurality of modules comprising a selling agreements module configured to generate a selling agreement;

said plurality of modules comprising a commission module configured to determine commission amounts associated with a sales transaction based on said selling agreement;

said plurality of modules comprising a licensing module configured to determine if a party associated with said sales transaction has a valid license to sell products associated with the sales transaction;

said plurality of modules comprising a payment module for ~~distributing~~ determining payment associated with said sales transaction to said party in accordance with (i) a determination of said commission amounts determined by said commission module and (ii) a determination by said licensing module of whether said party has a valid license to sell the products associated with said sales transaction.

2. (Original) The system of claim 2 wherein said licensing module is further configured to determine if a party associated with said sales transaction comprises a valid appointment.

3. (Original) The system of claim 1 wherein said plurality of modules further comprises a distributor administration module configured to manage information associated with a plurality of distributors.

4. (Original) The system of claim 1 wherein said selling agreement comprises compensation components.

5. (Original) The system of claim 4 wherein said selling agreement comprises document components.

6. (Original) The system of claim 5 wherein said selling agreements module configured to generate said selling agreement utilizes a configuration engine to determine which of said compensation components and said document components to include.

7. (Original) The method of claim 6 wherein said commission module accesses a commission engine to determine said commission amounts.

8. (Original) The system of claim 1 wherein said selling agreement comprises a binding contract between an institution having at least one product and a distributor.

9. (Original) The system of claim 8 wherein said institution comprises financial institution.

10. (Original) The system of claim 8 wherein said product comprise financial product.

11. (Original) The system of claim 10 wherein said financial product comprises life insurance.

12. (Original) A system for managing relationships between a first party and a second party comprising:

a database source comprising a plurality of data objects representative of at least one distributing party, at least one selling agreement and at least one license or appointment associated with said at least one distributing party;

a distributor management engine configured to obtain at least one of said plurality of data objects from said database source and determine whether said at least one distributing party conforms with said at least one selling agreement and said at least one license or appointment is valid.

13. (Original) The system of claim 12 further comprising:

a backbone coupled to said distributor management engine, said backbone configured to transport said at least one of said plurality of data objects.

14. (Original) The system of claim 12 further comprising:
an interface for obtaining a plurality of business rules defining relationships between an institution and said at least one distributing party.

15. (Original) The system of claim 13 further comprising:
a commission engine configured to utilize said backbone to fetch said at least one selling agreement from said database source.

16. (Original) The system of claim 15 wherein said commission engine generates commission schemes utilized to model a set of selling agreement objects.

17. (Original) The system of claim 16 wherein said distributor management engine generates payments based on said selling agreement objects.

18. (Original) The system of claim 12 further comprising:
a workflow process engine configured to process workflow events.

19. (Original) The system of claim 18 wherein said workflow process events are determined by business rules defined by a user.

20. (Original) The system of claim 19 further comprising:
a commerce configuration engine configured to provide a configuration engine access to said business rules.

21. (Original) The system of claim 12 further comprising:
a report engine configured to generate a plurality of reports associated with said at least one distributing party.

22. (Original) The system of claim 21 wherein said report engine utilizes report templates to generate said plurality of reports.

23. (Original) The system of claim 12 further comprising:

a distributor administration module for managing said plurality of data objects.

24. (Original) The system of claim 12 further comprising:

a licensing and appointment module configured to enable an institution to manage said at least one license or appointments data object for at least one said distributor.

25. (Original) The system of claim 24 wherein said licensing and appointment module is configured to validate license or appointment compliance with a set of industry regulations by evaluating said at least one license or appointment data object.

26. (Original) The system of claim 12 further comprising:

a selling agreements module configured to enable said institution to define and create a business contract with said at least one distributing party.

27. (Original) The system of claim 26 wherein said selling agreements module manages a set of business rules governing how contract components are combined into said at least one selling agreement associated with each of said at least one distributing party.

28. (Original) The system of claim 27 further comprising:

a debt management module configured to enable said institution to manage distributor advances and repayments.

29. (Original) The system of claim 28 wherein said debt management module is utilized to define and manage a set of payment rules defining parameters for paying said at least one distributing party.

30. (Original) The system of claim 12 further comprising:

a net pay module enabling said institution to track and calculate payments to distributors.

31. (Original) The system of claim 12 wherein said institution comprises a financial services institution.

32. (Currently Amended) A system for managing relationships between a first party and a second party comprising:

an interface for obtaining a plurality of business rules defining relationships between an institution and at least one distributor;

a database source comprising a plurality of data objects representative of said at least one distributor, at least one selling agreement and at least one license or appointment associated with said at least one distributor;

a commission engine configured to determine a commission amount associated with said at least one distributor by evaluating said at least one selling agreement data object;

a backbone coupled to said distributor management engine, said backbone configured to transport said at least one of said plurality of data objects to a plurality of modules;

said plurality of modules comprising, a distributor administration module for managing said plurality of data objects;

said plurality of modules comprising, a licensing and appointment module configured to determine if said at least one license or appointment data object associated with said at least one distributor is in compliance with a set of industry regulations;

said plurality of modules comprising, a selling agreements module configured to enable said institution to define and create a selling agreement with said at least one distributor;

said plurality of modules comprising, a payment module configured to ~~distribute~~ determine said commission amount to said at least one distributor.

33. (Original) The system of claim 32 wherein said commission engine utilizes said backbone to fetch said at least one selling agreement from said database source.

34. (Original) The system of claim 32 further comprising:

a workflow process engine configured to process workflow events, said workflow process events determined by said business rules.

35. (Original) The system of claim 32 further comprising:

a commerce configuration engine configured to provide access to said business rules.

36. (Original) The system of claim 32 further comprising:

a report engine configured to generate a plurality of reports associated with said at least one distributor.

37. (Original) The system of claim 36 wherein said report engine utilizes report templates to generate said plurality of reports.

38. (Original) The system of claim 32 wherein said selling agreement comprises a contract between said institution and said at least one distributor.

39. (Original) The system of claim 38 wherein said selling agreements module manages a set of business rules governing how contract components are combined into said at least one selling agreement associated with each of said at least one distributors.

40. (Original) The system of claim 32 further comprising:

a debt management module configured to enable said institution to manage distributor advances and repayments.

41. (Original) The system of claim 28 wherein said debt management module is utilized to define and manage a set of payment rules defining parameters for paying said at least one distributor.

42. (Original) The system of claim 12 wherein said institution comprises a financial services institution.

43. - 64. (Canceled).

REMARKS

Claims 1-64 are pending. Claims 1-42 stand rejected.

Claims 43-64 have been canceled without prejudice or disclaimer of the subject matter recited therein.

Claim 1 has been amended. Claim 32 has been amended with a non-narrowing amendment.

Claim Rejections - 35 U.S.C. § 103

Claims 1-42 stand rejected under 35 U.S.C. § 103(a) as being unpatentable over U.S. Patent No. 6,782,369 issued to Carrott (referred to herein as "*Carrott*"). Applicants respectfully traverse the rejection.

The Examiner relies upon *Carrott*, Official Notice of various matters, and *In re Venner*, 262 F. 2d 91, 120 USPQ 193 (CCPA 1958) to establish a *prima facie* case of obviousness. Applicants respectfully submit that the teachings and suggestions of *Carrott* lacks multiple features of the claimed invention, *Carrott* teaches against the claimed invention, the facts taken under Official Notice fail to teach the features lacking in *Carrott*, that the present invention does not provide a common, simple conversion of a manual activity into an automatic process.

Carrott relates to a "system and method of allocating commissions for sales made over the Internet and for dividing an otherwise indivisible Internet into defined geographic areas." *Carrott*, Abstract. The Examiner admits in the March 1, 2007 Office Action ("Office Action") that *Carrott* fails to disclose "the term selling agreement associated with a valid license" and "disclose a commission received for each sale completed." Thus, Applicants respectfully submit that the record admits that *Carrott* does not teach or suggest "a licensing module configured to determine if a party associated with said sales transaction has a valid license to sell products associated with the sales transaction."

Applicants respectfully submit that *Carrott* also fails to teach or suggest "a selling agreements module configured to generate a selling agreement." Claim 1. *Carrott* discloses that "the invention verifies a sale through digital recording of an oral agreement." *Carrott*, col. 4, lines 3-4. *Carrott* also discloses element 306 in Figure 3 for "confirming and accepting the terms of

agreement." *Id.*, col. 10, lines 24-25. Applicants respectfully submit that "digital recording of an oral agreement" and "confirming and accepting the terms of agreement" do not teach or suggest "a selling agreements module configured to generate a selling agreement" as required by claim 1.

Applicants also respectfully submit that *Carrott* fails to teach or suggest "a commission module configured to determine commission amounts associated with a sales transaction based on said selling agreement" because *Carrott* fails to teach or suggest the "selling agreement" of Claim 1, which is 'generated' by the "selling agreements module".

Applicants respectfully submit that *Carrott* also fails to teach or suggest "a payment module for determining payment associated with said sales transaction to said party in accordance with (i) a determination of said commission amounts determined by said commission module and (ii) a determination by said licensing module of whether said party has a valid license to sell the products associated with said sales transaction" because (1) *Carrott* fails to teach or suggest the particular commission module of claim 1 and (2) *Carrott* fails to teach or suggest the licensing module of claim 1.

Thus, *Carrott* alone fails to teach or suggest multiple elements of claim 1.

The Examiner submits that the missing elements are a matter of "common knowledge" and the invention "automate[s] a well known complex manual process." Office Action, p. 3.

In *In re Venner*, the Court stated that "it is well settled that it is not 'invention' to broadly provide a mechanical or automatic means to replace manual activity which has accomplished the same result." *In re Venner*, 262 F.2d at 95, 120 USPQ at 194. In *Venner*, however, all the limitations in the claims, including the automatic means, were disclosed in the applied references. See *Venner*, 262 F.2d at 96, 120 USPQ at 195.

The Examiner has taken Official Notice that "selling agreements associated with a sales agent having a valid licenses has been common knowledge in the sales transaction art" and "document components, life insurance advances, payment rules, repayments, workflow events have been common knowledge in the sales transaction art." Office Action, page 2. However, claim 1 does not simply claim what is included in *Carrott* and what is recognized as common knowledge.

In the present case, Applicants respectfully submit that the Examiner has failed to provide any reference that discloses the following elements of claim 1:

> a selling agreements module configured to generate a selling agreement;
>
> modules comprising a commission module configured to determine commission amounts associated with a sales transaction based on said selling agreement;
>
> a licensing module configured to determine if a party associated with said sales transaction has a valid license to sell products associated with the sales transaction;
>
> OR
>
> a payment module for determining payment associated with said sales transaction to said party in accordance with (i) a determination of said commission amounts determined by said commission module and (ii) a determination by said licensing module of whether said party has a valid license to sell the products associated with said sales transaction. Claim 1.

The Federal Circuit has stated that the "reliance on *per se* rules of obviousness is legally incorrect." *In re Ochiai*, 71 F.3d 1565, 1572, 37 USPQ2d 1127, 1133 (Fed. Cir. 1995).

Applicants respectfully submit that although it was well-known that sales agents are supposed to have licenses to conduct certain types of sales transactions, a system for managing relationships between a first party and a second party that includes the above cited elements is not obvious. The Background section of the present application states that "any plan for distribution channel management must consider the number of channels, the number of distributors, compensation complexity, regulatory and licensing requirements and the number and types of products that will be sold." Present Application, Background, p. 3, lines 10-13. Thus, the present application recognizes that licensing requirements are known. The Background section of the present application also asserts that **"The distribution channel model within the financial services industry is very complex."** *Id.*, lines 1-2. Furthermore, "Credential management is a

critical issue for many firms." *Id.*, p. 8, line 1. "This need [to track accreditation] is made more acute by constantly changing governmental rules and regulations, as well as by different regulations imposed by the different jurisdictions in which a firm operates." *Id.*, lines 8-11.

Although the necessity of licensed individuals in certain sales transaction contexts was well-known, Applicants respectfully submit, and have documented in the Present Application, that such recognition does not teach or suggest an enabling solution to a very complex problem. Thus, the present invention is not simply the application of common knowledge of one of ordinary skill in the art to automate a known manual process. As stated by the Present Application, "In conclusion, there is a need for a solution … where there is multiple channel selling, a fluid workforce, and regulatory constraints." *Id.*, p. 10, lines 12-16. Thus, the prior existence of the alleged motivation "to incorporate common knowledge association means to track sales personal and their productivity" is directly controverted by the Background section.

As the Background section contends, to which the Examiner has cited no reference to contrary, manual processes have not provided a solution to the problems set forth in the Background section. Since there was no effective manual solution and the Examiner has failed to cite any references disclosing the missing elements in the present invention, Applicants respectfully submit that the mere allegation that the present invention requires no more than common knowledge and does not hindsight is legally incorrect. Again, as the Federal Circuit has stated that the "reliance on *per se* rules of obviousness is legally incorrect." *In re Ochiai*, 71 F.3d 1565, 1572, 37 USPQ2d 1127, 1133 (Fed. Cir. 1995).

Teaching Away. Furthermore, Applicants respectfully submit that *Carrott* actually teaches away from the present invention. It is well-known that "teaching away" from the claimed invention is one important indicium of non-obviousness. *In re Dow Chemical Co.*, 837 F.2d 469, 473 USPQ2d 1529 (Fed. Cir. 1988). *Carrott* teaches "allocating the commissions **based solely** on the value of the goods delivered to each of the geographic distribution/representation areas." *Carrott*, Abstract. See also, *Carrott*, col. 9, line 11 and col. 11, lines 47-49. Claim 1 recites, "said plurality of modules comprising a payment module for determining payment associated with said sales transaction to said party in accordance with (i) a determination of said commission amounts determined by said commission module and (ii) a determination by said licensing module of

whether said party has a valid license to sell the products associated with said sales transaction" NOT "**based solely** on the value of the goods delivered to each of the geographic distribution/representation areas" as required by the teachings of *Carrott*. Thus, *Carrott* teaches away from the subject matter of claim 1. Since *Carrott* teaches away from the present invention of claim 1, Applicants respectfully submit that a *prima facie* case of obviousness has not been made.

Additionally, for similar reasons and in light of the prohibition of "reliance on *per se* rules of obviousness", Applicants respectfully submit that *Carrott* in view of Official Notice fail to teach or suggest:

- **Claim 12.** "A system for managing relationships between a first party and a second party" that includes:
    - "a database source comprising a plurality of data objects representative of … at least one license or appointment associated with said at least one distributing party" and
    - a distributor management engine configured to … determine whether said at least one distributing party conforms with said at least one selling agreement and said at least one license or appointment is valid.
- **Claim 32.** "A system for managing relationships between a first party and a second party" that includes:
    - a database source comprising a plurality of data objects representative of said at least one distributor, at least one selling agreement and at least one license or appointment associated with said at least one distributor;
    - a "plurality of modules comprising, a licensing and appointment module configured to determine if said at least one license or appointment data object associated with said at least one distributor is in compliance with a set of industry regulations;"

- said plurality of modules comprising, a selling agreements module configured to enable said institution to define and create a selling agreement with said at least one distributor;

Accordingly, Applicants respectfully request withdrawal of the rejection of independent Claims 1, 12, and 32 and, for at least the same reasons, withdrawal of claims directly or indirectly dependent upon Claims 1, 12, or 32.

CONCLUSION

In view of the amendments and remarks set forth herein, the application is believed to be in condition for allowance and a notice to that effect is solicited. Nonetheless, should any issues remain that might be subject to resolution through a telephonic interview, the examiner is requested to telephone the undersigned.

FILED ELECTRONICALLY
September 4, 2007

Respectfully submitted,

/Kent B. Chambers/

Kent B. Chambers
Attorney for Applicant(s)
Reg. No. 38,839

Ex. 1002 347/597

UNITED STATES PATENT AND TRADEMARK OFFICE

UNITED STATES DEPARTMENT OF COMMERCE
United States Patent and Trademark Office
Address: COMMISSIONER FOR PATENTS
P.O. Box 1450
Alexandria, Virginia 22313-1450
www.uspto.gov

APPLICATION NO.	FILING DATE	FIRST NAMED INVENTOR	ATTORNEY DOCKET NO.	CONFIRMATION NO.
09/810,514	03/15/2001	David Chao	T00071	6193

33438 7590 12/11/2007
HAMILTON & TERRILE, LLP
P.O. BOX 203518
AUSTIN, TX 78720

EXAMINER	
RUDY, ANDREW J	

ART UNIT	PAPER NUMBER
3627	

NOTIFICATION DATE	DELIVERY MODE
12/11/2007	ELECTRONIC

Please find below and/or attached an Office communication concerning this application or proceeding.

The time period for reply, if any, is set in the attached communication.

Notice of the Office communication was sent electronically on above-indicated "Notification Date" to the following e-mail address(es):

docketing@hamiltonterrile.com
seaton@hamiltonterrile.com
tmunoz@hamiltonterrile.com

Office Action Summary	Application No.	Applicant(s)	
	09/810,514	CHAO ET AL.	
	Examiner	Art Unit	
	Andrew Joseph Rudy	3627	

-- The MAILING DATE of this communication appears on the cover sheet with the correspondence address --

Period for Reply

A SHORTENED STATUTORY PERIOD FOR REPLY IS SET TO EXPIRE 3 MONTH(S) OR THIRTY (30) DAYS, WHICHEVER IS LONGER, FROM THE MAILING DATE OF THIS COMMUNICATION.

- Extensions of time may be available under the provisions of 37 CFR 1.136(a). In no event, however, may a reply be timely filed after SIX (6) MONTHS from the mailing date of this communication.
- If NO period for reply is specified above, the maximum statutory period will apply and will expire SIX (6) MONTHS from the mailing date of this communication.
- Failure to reply within the set or extended period for reply will, by statute, cause the application to become ABANDONED (35 U.S.C. § 133). Any reply received by the Office later than three months after the mailing date of this communication, even if timely filed, may reduce any earned patent term adjustment. See 37 CFR 1.704(b).

Status

1)☒ Responsive to communication(s) filed on *04 September 2007*.

2a)☐ This action is **FINAL**. 2b)☒ This action is non-final.

3)☐ Since this application is in condition for allowance except for formal matters, prosecution as to the merits is closed in accordance with the practice under *Ex parte Quayle*, 1935 C.D. 11, 453 O.G. 213.

Disposition of Claims

4)☒ Claim(s) *1-42* is/are pending in the application.

4a) Of the above claim(s) _____ is/are withdrawn from consideration.

5)☐ Claim(s) _____ is/are allowed.

6)☒ Claim(s) *1-42* is/are rejected.

7)☐ Claim(s) _____ is/are objected to.

8)☐ Claim(s) _____ are subject to restriction and/or election requirement.

Application Papers

9)☐ The specification is objected to by the Examiner.

10)☐ The drawing(s) filed on _____ is/are: a)☐ accepted or b)☐ objected to by the Examiner.

Applicant may not request that any objection to the drawing(s) be held in abeyance. See 37 CFR 1.85(a).

Replacement drawing sheet(s) including the correction is required if the drawing(s) is objected to. See 37 CFR 1.121(d).

11)☐ The oath or declaration is objected to by the Examiner. Note the attached Office Action or form PTO-152.

Priority under 35 U.S.C. § 119

12)☐ Acknowledgment is made of a claim for foreign priority under 35 U.S.C. § 119(a)-(d) or (f).

a)☐ All b)☐ Some * c)☐ None of:

1.☐ Certified copies of the priority documents have been received.

2.☐ Certified copies of the priority documents have been received in Application No. _____.

3.☐ Copies of the certified copies of the priority documents have been received in this National Stage application from the International Bureau (PCT Rule 17.2(a)).

* See the attached detailed Office action for a list of the certified copies not received.

Attachment(s)

1) ☒ Notice of References Cited (PTO-892)
2) ☐ Notice of Draftsperson's Patent Drawing Review (PTO-948)
3) ☐ Information Disclosure Statement(s) (PTO/SB/08) Paper No(s)/Mail Date _____.
4) ☐ Interview Summary (PTO-413) Paper No(s)/Mail Date. _____ .
5) ☐ Notice of Informal Patent Application
6) ☐ Other: _____.

DETAILED ACTION

Continued Examination Under 37 CFR 1.114

1. A request for continued examination under 37 CFR 1.114, including the fee set forth in 37 CFR 1.17(e), was filed in this application after final rejection. Since this application is eligible for continued examination under 37 CFR 1.114, and the fee set forth in 37 CFR 1.17(e) has been timely paid, the finality of the previous Office action has been withdrawn pursuant to 37 CFR 1.114. Applicant's submission filed on September 4, 2007 has been entered. The previous rejection is withdrawn pursuant thereto.

2. Claims 1-42 are rejected under 35 U.S.C. 103(a) as being unpatentable over Mikurak, US 7,124,101.

Mikurak discloses, e.g. Figs. 1-143 and associated text, a system for managing relationships between a first party, e.g. customer, and a second party, e.g. vendor/brokers, at least one processor, e.g. 2801, 13500, 13504, memory, e.g. 2804, 2806, random access memory (RAM), read only memory (ROM), 4620, and memory for controlling system dynamics, e.g. protocols and rules allocating trading priority and system responses to operative commands entered by brokers, managing distributor information, e.g. service level agreements (Figs. 17, 22-24, 26), 4704, 4710, a selling agreement, e.g. Figs. 128, 131, 13000, a special commission structure, e.g. col. 286, lines 5-10, and a proper commission computation using order variables, e.g. col. 290,

lines 35-59, business rules, e.g. Fig. 67, and a license agreement, e.g. 6408. Mikurak does not disclose a licensing module, an appointment a commerce configuration engine. However, licensing modules and appointments to determine commission amounts are common knowledge in the licensing and transaction art. To have provided the licensing agreement to have incorporated a licensing module and appointments to determine commission amounts would have been obvious to one of ordinary skill in the art, as would have been using a commerce configuration engine to be determined by business rules.

3. Further pertinent references of interest are noted on the attached PTO-892.

4. Any inquiry concerning this communication or earlier communications from the examiner should be directed to Andrew Joseph Rudy whose telephone number is 571-272-6789. The examiner can normally be reached on Monday thru Friday.

If attempts to reach the examiner by telephone are unsuccessful, the examiner's supervisor, Ryan M. Zeender can be reached on 571-272-6790. The fax phone number for the organization where this application or proceeding is assigned is 571-273-8300.

Information regarding the status of an application may be obtained from the Patent Application Information Retrieval (PAIR) system. Status information for published applications may be obtained from either Private PAIR or Public PAIR.

Status information for unpublished applications is available through Private PAIR only. For more information about the PAIR system, see http://pair-direct.uspto.gov. Should you have questions on access to the Private PAIR system, contact the Electronic Business Center (EBC) at 866-217-9197 (toll-free). If you would like assistance from a USPTO Customer Service Representative or access to the automated information system, call 800-786-9199 (IN USA OR CANADA) or 571-272-1000.

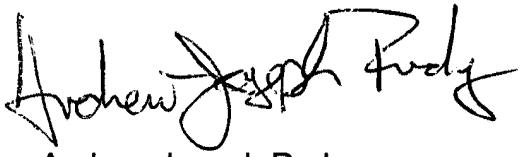

Andrew Joseph Rudy
Primary Examiner
Art Unit 3627

Notice of References Cited	Application/Control No. 09/810,514	Applicant(s)/Patent Under Reexamination CHAO ET AL.	
	Examiner Andrew Joseph Rudy	Art Unit 3627	Page 1 of 1

U.S. PATENT DOCUMENTS

*		Document Number Country Code-Number-Kind Code	Date MM-YYYY	Name	Classification
*	A	US-7,272,572	09-2007	Pienkos, John Thaddeus	705/26
*	B	US-7,225,165	05-2007	Kyojima et al.	705/59
*	C	US-7,124,101	10-2006	Mikurak, Michael G.	705/35
*	D	US-6,351,738	02-2002	Clark, Douglas W.	705/37
	E	US-			
	F	US-			
	G	US-			
	H	US-			
	I	US-			
	J	US-			
	K	US-			
	L	US-			
	M	US-			

FOREIGN PATENT DOCUMENTS

*		Document Number Country Code-Number-Kind Code	Date MM-YYYY	Country	Name	Classification
	N					
	O					
	P					
	Q					
	R					
	S					
	T					

NON-PATENT DOCUMENTS

*		Include as applicable: Author, Title Date, Publisher, Edition or Volume, Pertinent Pages)
	U	
	V	
	W	
	X	

*A copy of this reference is not being furnished with this Office action. (See MPEP § 707.05(a).)
Dates in MM-YYYY format are publication dates. Classifications may be US or foreign.

Index of Claims

Application/Control No.	Applicant(s)/Patent under Reexamination
09/810,514	CHAO ET AL.
Examiner	**Art Unit**
Andrew Joseph Rudy	3627

√	Rejected	–	(Through numeral) Cancelled	N	Non-Elected	A	Appeal
=	Allowed	÷	Restricted	I	Interference	O	Objected

Claim		Date
Final	Original	12/5/07
	1	√
	2	√
	3	√
	4	√
	5	√
	6	√
	7	√
	8	√
	9	√
	10	√
	11	√
	12	√
	13	√
	14	√
	15	√
	16	√
	17	√
	18	√
	19	√
	20	√
	21	√
	22	√
	23	√
	24	√
	25	√
	26	√
	27	√
	28	√
	29	√
	30	√
	31	√
	32	√
	33	√
	34	√
	35	√
	36	√
	37	√
	38	√
	39	√
	40	√
	41	√
	42	√
	43	
	44	
	45	
	46	
	47	
	48	
	49	
	50	

Claim		Date
Final	Original	
	51	
	52	
	53	
	54	
	55	
	56	
	57	
	58	
	59	
	60	
	61	
	62	
	63	
	64	
	65	
	66	
	67	
	68	
	69	
	70	
	71	
	72	
	73	
	74	
	75	
	76	
	77	
	78	
	79	
	80	
	81	
	82	
	83	
	84	
	85	
	86	
	87	
	88	
	89	
	90	
	91	
	92	
	93	
	94	
	95	
	96	
	97	
	98	
	99	
	100	

Claim		Date
Final	Original	
	101	
	102	
	103	
	104	
	105	
	106	
	107	
	108	
	109	
	110	
	111	
	112	
	113	
	114	
	115	
	116	
	117	
	118	
	119	
	120	
	121	
	122	
	123	
	124	
	125	
	126	
	127	
	128	
	129	
	130	
	131	
	132	
	133	
	134	
	135	
	136	
	137	
	138	
	139	
	140	
	141	
	142	
	143	
	144	
	145	
	146	
	147	
	148	
	149	
	150	

Search Notes

Application/Control No.	Applicant(s)/Patent under Reexamination	
09/810,514	CHAO ET AL.	
Examiner	**Art Unit**	
Andrew Joseph Rudy	3627	

SEARCHED			
Class	Subclass	Date	Examiner

INTERFERENCE SEARCHED			
Class	Subclass	Date	Examiner

SEARCH NOTES (INCLUDING SEARCH STRATEGY)		
	DATE	EXMR
East: relevant terms searched.	12/5/2007	AJR

PTO/SB/08a (05-07)
Approved for use through 09/30/2007. OMB 0651-0031
U.S. Patent and Trademark Office; U.S. DEPARTMENT OF COMMERCE
Under the Paperwork Reduction Act of 1995, no persons are required to respond to a collection of information unless it contains a valid OMB control number.

INFORMATION DISCLOSURE STATEMENT BY APPLICANT

(Not for submission under 37 CFR 1.99)

Application Number	09810514
Filing Date	2001-03-15
First Named Inventor	David Chao
Art Unit	3627
Examiner Name	Andrew J. Rudy
Attorney Docket Number	T00071

U.S.PATENTS

Examiner Initial*	Cite No	Patent Number	Kind Code[1]	Issue Date	Name of Patentee or Applicant of cited Document	Pages,Columns,Lines where Relevant Passages or Relevant Figures Appear
	1	6847935	B1	2005-01-25	Solomon et al.	
	2	6636852	B2	2003-10-21	Gozdeck et al.	

If you wish to add additional U.S. Patent citation information please click the Add button.

U.S.PATENT APPLICATION PUBLICATIONS

Examiner Initial*	Cite No	Publication Number	Kind Code[1]	Publication Date	Name of Patentee or Applicant of cited Document	Pages,Columns,Lines where Relevant Passages or Relevant Figures Appear
	1	20010047299	A1	2001-11-29	Brewer et al.	

If you wish to add additional U.S. Published Application citation information please click the Add button.

FOREIGN PATENT DOCUMENTS

Examiner Initial*	Cite No	Foreign Document Number[3]	Country Code[2] i	Kind Code[4]	Publication Date	Name of Patentee or Applicant of cited Document	Pages,Columns,Lines where Relevant Passages or Relevant Figures Appear	T[5]
	1							☐

If you wish to add additional Foreign Patent Document citation information please click the Add button

NON-PATENT LITERATURE DOCUMENTS

INFORMATION DISCLOSURE STATEMENT BY APPLICANT

(**Not for submission under 37 CFR 1.99)**

Application Number	09810514
Filing Date	2001-03-15
First Named Inventor	David Chao
Art Unit	3627
Examiner Name	Andrew J. Rudy
Attorney Docket Number	T00071

Examiner Initials*	Cite No	Include name of the author (in CAPITAL LETTERS), title of the article (when appropriate), title of the item (book, magazine, journal, serial, symposium, catalog, etc), date, pages(s), volume-issue number(s), publisher, city and/or country where published.	T[5]
	1		☐

If you wish to add additional non-patent literature document citation information please click the Add button

EXAMINER SIGNATURE

Examiner Signature		Date Considered	

*EXAMINER: Initial if reference considered, whether or not citation is in conformance with MPEP 609. Draw line through a citation if not in conformance and not considered. Include copy of this form with next communication to applicant.

[1] See Kind Codes of USPTO Patent Documents at www.USPTO.GOV or MPEP 901.04. [2] Enter office that issued the document, by the two-letter code (WIPO Standard ST.3). [3] For Japanese patent documents, the indication of the year of the reign of the Emperor must precede the serial number of the patent document. [4] Kind of document by the appropriate symbols as indicated on the document under WIPO Standard ST.16 if possible. [5] Applicant is to place a check mark here if English language translation is attached.

INFORMATION DISCLOSURE STATEMENT BY APPLICANT

(**Not for submission under 37 CFR 1.99)**

Application Number	09810514
Filing Date	2001-03-15
First Named Inventor	David Chao
Art Unit	3627
Examiner Name	Andrew J. Rudy
Attorney Docket Number	T00071

CERTIFICATION STATEMENT

Please see 37 CFR 1.97 and 1.98 to make the appropriate selection(s):

☐ That each item of information contained in the information disclosure statement was first cited in any communication from a foreign patent office in a counterpart foreign application not more than three months prior to the filing of the information disclosure statement. See 37 CFR 1.97(e)(1).

OR

☐ That no item of information contained in the information disclosure statement was cited in a communication from a foreign patent office in a counterpart foreign application, and, to the knowledge of the person signing the certification after making reasonable inquiry, no item of information contained in the information disclosure statement was known to any individual designated in 37 CFR 1.56(c) more than three months prior to the filing of the information disclosure statement. See 37 CFR 1.97(e)(2).

☐ See attached certification statement.

☒ Fee set forth in 37 CFR 1.17 (p) has been submitted herewith.

☐ None

SIGNATURE

A signature of the applicant or representative is required in accordance with CFR 1.33, 10.18. Please see CFR 1.4(d) for the form of the signature.

Signature	/Kent B. Chambers/	Date (YYYY-MM-DD)	2008-01-08
Name/Print	Kent B. Chambers	Registration Number	38,839

This collection of information is required by 37 CFR 1.97 and 1.98. The information is required to obtain or retain a benefit by the public which is to file (and by the USPTO to process) an application. Confidentiality is governed by 35 U.S.C. 122 and 37 CFR 1.14. This collection is estimated to take 1 hour to complete, including gathering, preparing and submitting the completed application form to the USPTO. Time will vary depending upon the individual case. Any comments on the amount of time you require to complete this form and/or suggestions for reducing this burden, should be sent to the Chief Information Officer, U.S. Patent and Trademark Office, U.S. Department of Commerce, P.O. Box 1450, Alexandria, VA 22313-1450. DO NOT SEND FEES OR COMPLETED FORMS TO THIS ADDRESS. **SEND TO: Commissioner for Patents, P.O. Box 1450, Alexandria, VA 22313-1450.**

Electronic Patent Application Fee Transmittal

Application Number:	09810514
Filing Date:	15-Mar-2001
Title of Invention:	Method and system for managing distributor information
First Named Inventor/Applicant Name:	David Chao
Filer:	Kent Bryan Chambers/Terri Munoz
Attorney Docket Number:	T00071

Filed as Large Entity

Utility Filing Fees

Description	Fee Code	Quantity	Amount	Sub-Total in USD($)
Basic Filing:				
Pages:				
Claims:				
Miscellaneous-Filing:				
Petition:				
Patent-Appeals-and-Interference:				
Post-Allowance-and-Post-Issuance:				
Extension-of-Time:				

Description	Fee Code	Quantity	Amount	Sub-Total in USD($)
Miscellaneous:				
Submission- Information Disclosure Stmt	1806	1	180	180
		Total in USD ($)		**180**

Electronic Acknowledgement Receipt

EFS ID:	2684685
Application Number:	09810514
International Application Number:	
Confirmation Number:	6193
Title of Invention:	Method and system for managing distributor information
First Named Inventor/Applicant Name:	David Chao
Customer Number:	33438
Filer:	Kent Bryan Chambers/Terri Munoz
Filer Authorized By:	Kent Bryan Chambers
Attorney Docket Number:	T00071
Receipt Date:	08-JAN-2008
Filing Date:	15-MAR-2001
Time Stamp:	13:57:44
Application Type:	Utility under 35 USC 111(a)

Payment information:

Submitted with Payment	yes
Payment Type	Credit Card
Payment was successfully received in RAM	$180
RAM confirmation Number	9551
Deposit Account	
Authorized User	

File Listing:

Document Number	Document Description	File Name	File Size(Bytes) /Message Digest	Multi Part /.zip	Pages (if appl.)
		Ex. 1002 [illegible]			

1	Information Disclosure Statement (IDS) Filed	T00071_IDS_1_8_08.pdf	32650 bca29e248b12a14d174ca12571e21349e27c5532	no	3
Warnings:					
Information:					
This is not an USPTO supplied IDS fillable form					
2	Fee Worksheet (PTO-06)	fee-info.pdf	8168 cc4deccb20b7b396ec27e9072aeb8ab420745e10	no	2
Warnings:					
Information:					
		Total Files Size (in bytes):	40818		

This Acknowledgement Receipt evidences receipt on the noted date by the USPTO of the indicated documents, characterized by the applicant, and including page counts, where applicable. It serves as evidence of receipt similar to a Post Card, as described in MPEP 503.

New Applications Under 35 U.S.C. 111
If a new application is being filed and the application includes the necessary components for a filing date (see 37 CFR 1.53(b)-(d) and MPEP 506), a Filing Receipt (37 CFR 1.54) will be issued in due course and the date shown on this Acknowledgement Receipt will establish the filing date of the application.

National Stage of an International Application under 35 U.S.C. 371
If a timely submission to enter the national stage of an international application is compliant with the conditions of 35 U.S.C. 371 and other applicable requirements a Form PCT/DO/EO/903 indicating acceptance of the application as a national stage submission under 35 U.S.C. 371 will be issued in addition to the Filing Receipt, in due course.

New International Application Filed with the USPTO as a Receiving Office
If a new international application is being filed and the international application includes the necessary components for an international filing date (see PCT Article 11 and MPEP 1810), a Notification of the International Application Number and of the International Filing Date (Form PCT/RO/105) will be issued in due course, subject to prescriptions concerning national security, and the date shown on this Acknowledgement Receipt will establish the international filing date of the application.

PTO/SB/08a (05-07)
Approved for use through 09/30/2007. OMB 0651-0031
U.S. Patent and Trademark Office; U.S. DEPARTMENT OF COMMERCE
Under the Paperwork Reduction Act of 1995, no persons are required to respond to a collection of information unless it contains a valid OMB control number.

INFORMATION DISCLOSURE STATEMENT BY APPLICANT

(Not for submission under 37 CFR 1.99)

Application Number	09810514
Filing Date	2001-03-15
First Named Inventor	David Chao
Art Unit	3627
Examiner Name	Andrew J. Rudy
Attorney Docket Number	T00071

U.S.PATENTS

Examiner Initial*	Cite No	Patent Number	Kind Code[1]	Issue Date	Name of Patentee or Applicant of cited Document	Pages,Columns,Lines where Relevant Passages or Relevant Figures Appear
	1	5446653		1995-08-29	Miller et al.	
	2	5692206		1997-11-25	Shirley et al.	
	3	7007227		2006-02-28	Constantino et al.	

If you wish to add additional U.S. Patent citation information please click the Add button.

U.S.PATENT APPLICATION PUBLICATIONS

Examiner Initial*	Cite No	Publication Number	Kind Code[1]	Publication Date	Name of Patentee or Applicant of cited Document	Pages,Columns,Lines where Relevant Passages or Relevant Figures Appear
	1					

If you wish to add additional U.S. Published Application citation information please click the Add button.

FOREIGN PATENT DOCUMENTS

Examiner Initial*	Cite No	Foreign Document Number[3]	Country Code[2] i	Kind Code[4]	Publication Date	Name of Patentee or Applicant of cited Document	Pages,Columns,Lines where Relevant Passages or Relevant Figures Appear	T[5]
	1							☐

INFORMATION DISCLOSURE STATEMENT BY APPLICANT

(**Not for submission under 37 CFR 1.99)**

Application Number	09810514
Filing Date	2001-03-15
First Named Inventor	David Chao
Art Unit	3627
Examiner Name	Andrew J. Rudy
Attorney Docket Number	T00071

If you wish to add additional Foreign Patent Document citation information please click the Add button

NON-PATENT LITERATURE DOCUMENTS

Examiner Initials*	Cite No	Include name of the author (in CAPITAL LETTERS), title of the article (when appropriate), title of the item (book, magazine, journal, serial, symposium, catalog, etc), date, pages(s), volume-issue number(s), publisher, city and/or country where published.	T[5]
	1		☐

If you wish to add additional non-patent literature document citation information please click the Add button

EXAMINER SIGNATURE

Examiner Signature		Date Considered	

*EXAMINER: Initial if reference considered, whether or not citation is in conformance with MPEP 609. Draw line through a citation if not in conformance and not considered. Include copy of this form with next communication to applicant.

[1] See Kind Codes of USPTO Patent Documents at www.USPTO.GOV or MPEP 901.04. [2] Enter office that issued the document, by the two-letter code (WIPO Standard ST.3). [3] For Japanese patent documents, the indication of the year of the reign of the Emperor must precede the serial number of the patent document. [4] Kind of document by the appropriate symbols as indicated on the document under WIPO Standard ST.16 if possible. [5] Applicant is to place a check mark here if English language translation is attached.

INFORMATION DISCLOSURE STATEMENT BY APPLICANT

(**Not for submission under 37 CFR 1.99)**

Application Number	09810514
Filing Date	2001-03-15
First Named Inventor	David Chao
Art Unit	3627
Examiner Name	Andrew J. Rudy
Attorney Docket Number	T00071

CERTIFICATION STATEMENT

Please see 37 CFR 1.97 and 1.98 to make the appropriate selection(s):

☐ That each item of information contained in the information disclosure statement was first cited in any communication from a foreign patent office in a counterpart foreign application not more than three months prior to the filing of the information disclosure statement. See 37 CFR 1.97(e)(1).

OR

☐ That no item of information contained in the information disclosure statement was cited in a communication from a foreign patent office in a counterpart foreign application, and, to the knowledge of the person signing the certification after making reasonable inquiry, no item of information contained in the information disclosure statement was known to any individual designated in 37 CFR 1.56(c) more than three months prior to the filing of the information disclosure statement. See 37 CFR 1.97(e)(2).

☐ See attached certification statement.

☒ Fee set forth in 37 CFR 1.17 (p) has been submitted herewith.

☐ None

SIGNATURE

A signature of the applicant or representative is required in accordance with CFR 1.33, 10.18. Please see CFR 1.4(d) for the form of the signature.

Signature	/Kent B. Chambers/	Date (YYYY-MM-DD)	2008-05-08
Name/Print	Kent B. Chambers	Registration Number	38,839

This collection of information is required by 37 CFR 1.97 and 1.98. The information is required to obtain or retain a benefit by the public which is to file (and by the USPTO to process) an application. Confidentiality is governed by 35 U.S.C. 122 and 37 CFR 1.14. This collection is estimated to take 1 hour to complete, including gathering, preparing and submitting the completed application form to the USPTO. Time will vary depending upon the individual case. Any comments on the amount of time you require to complete this form and/or suggestions for reducing this burden, should be sent to the Chief Information Officer, U.S. Patent and Trademark Office, U.S. Department of Commerce, P.O. Box 1450, Alexandria, VA 22313-1450. DO NOT SEND FEES OR COMPLETED FORMS TO THIS ADDRESS. **SEND TO: Commissioner for Patents, P.O. Box 1450, Alexandria, VA 22313-1450.**

Electronic Patent Application Fee Transmittal

Application Number:	09810514
Filing Date:	15-Mar-2001
Title of Invention:	Method and system for managing distributor information
First Named Inventor/Applicant Name:	David Chao
Filer:	Kent Bryan Chambers/Terri Munoz
Attorney Docket Number:	T00071

Filed as Large Entity

Utility Filing Fees

Description	Fee Code	Quantity	Amount	Sub-Total in USD($)
Basic Filing:				
Pages:				
Claims:				
Miscellaneous-Filing:				
Petition:				
Patent-Appeals-and-Interference:				
Post-Allowance-and-Post-Issuance:				
Extension-of-Time:				

Description	Fee Code	Quantity	Amount	Sub-Total in USD($)
Miscellaneous:				
Submission- Information Disclosure Stmt	1806	1	180	180
		Total in USD ($)		**180**

Electronic Acknowledgement Receipt

EFS ID:	3274052
Application Number:	09810514
International Application Number:	
Confirmation Number:	6193
Title of Invention:	Method and system for managing distributor information
First Named Inventor/Applicant Name:	David Chao
Customer Number:	33438
Filer:	Kent Bryan Chambers/Terri Munoz
Filer Authorized By:	Kent Bryan Chambers
Attorney Docket Number:	T00071
Receipt Date:	08-MAY-2008
Filing Date:	15-MAR-2001
Time Stamp:	14:35:45
Application Type:	Utility under 35 USC 111(a)

Payment information:

Submitted with Payment	yes
Payment Type	Credit Card
Payment was successfully received in RAM	$180
RAM confirmation Number	10499
Deposit Account	502264
Authorized User	CHAMBERS,KENT B

The Director of the USPTO is hereby authorized to charge indicated fees and credit any overpayment as follows:

Charge any Additional Fees required under 37 C.F.R. Section 1.16 (National application filing, search, and examination fees)

Charge any Additional Fees required under 37 C.F.R. Section 1.17 (Patent application and reexamination processing fees)

Charge any Additional Fees required under 37 C.F.R. Section 1.19 (Document supply fees)

Charge any Additional Fees required under 37 C.F.R. Section 1.20 (Post Issuance fees)

Charge any Additional Fees required under 37 C.F.R. Section 1.21 (Miscellaneous fees and charges)

File Listing:

Document Number	Document Description	File Name	File Size(Bytes) /Message Digest	Multi Part /.zip	Pages (if appl.)
1	Information Disclosure Statement (IDS) Filed	T00071_IDS_5_8_08.pdf	33063 7d634f56fe586e5951df4798c9413fa94b8f67c1	no	3
Warnings:					
Information:					
This is not an USPTO supplied IDS fillable form					
2	Fee Worksheet (PTO-06)	fee-info.pdf	8168 cb1309e74ce09d22785631bce4618219804f454a	no	2
Warnings:					
Information:					
		Total Files Size (in bytes):	41231		

This Acknowledgement Receipt evidences receipt on the noted date by the USPTO of the indicated documents, characterized by the applicant, and including page counts, where applicable. It serves as evidence of receipt similar to a Post Card, as described in MPEP 503.

New Applications Under 35 U.S.C. 111
If a new application is being filed and the application includes the necessary components for a filing date (see 37 CFR 1.53(b)-(d) and MPEP 506), a Filing Receipt (37 CFR 1.54) will be issued in due course and the date shown on this Acknowledgement Receipt will establish the filing date of the application.

National Stage of an International Application under 35 U.S.C. 371
If a timely submission to enter the national stage of an international application is compliant with the conditions of 35 U.S.C. 371 and other applicable requirements a Form PCT/DO/EO/903 indicating acceptance of the application as a national stage submission under 35 U.S.C. 371 will be issued in addition to the Filing Receipt, in due course.

New International Application Filed with the USPTO as a Receiving Office
If a new international application is being filed and the international application includes the necessary components for an international filing date (see PCT Article 11 and MPEP 1810), a Notification of the International Application Number and of the International Filing Date (Form PCT/RO/105) will be issued in due course, subject to prescriptions concerning national security, and the date shown on this Acknowledgement Receipt will establish the international filing date of the application.

IN THE UNITED STATES PATENT AND TRADEMARK OFFICE

Applicants:	David Chao, Brian Blount, Charles Erickson, Shari Gharavy, Cheng Zhou, Joshua Toub		
Assignee:	Versata Development Group, Inc.		
Title:	METHOD AND SYSTEM FOR MANAGING DISTRIBUTOR INFORMATION		
Serial No.:	09/810,514	Filing Date:	March 15, 2001
Examiner:	Andrew J. Rudy	Group Art Unit:	3627
Docket No.:	T00071	Customer No.:	33438

Austin, Texas
June 11, 2008

FILED ELECTRONICALLY

RESPONSE TO NON-FINAL OFFICE ACTION

Dear Sir:

This paper is responsive to the Office Action dated December 11, 2007, having a shortened statutory period expiring on March 11, 2008. Accompanying this response is a petition under 37 C.F.R. § 1.136 for extension of time by three (3) months setting a new time for response of June 11, 2008. Further examination and reconsideration are respectfully requested in view of the amendments and remarks set forth below.

Ex. 1002 370/597

AMENDMENTS TO THE CLAIMS

1. (Currently Amended) A system for managing relationships between a first party and a second party comprising:

at least one processor;

memory coupled to said at least one processor;

said memory comprising a plurality of modules configured to manage distributor information;

said plurality of modules comprising a selling agreements module configured to generate a selling agreement;

said plurality of modules comprising a commission module configured to determine commission amounts associated with a sales transaction based on said selling agreement;

said plurality of modules comprising a licensing module configured to determine if a party associated with said sales transaction has a valid license to sell products associated with the sales transaction; and

said plurality of modules comprising a payment module for determining payment associated with said sales transaction to said party in accordance with (i) a determination of said commission amounts determined by said commission module and (ii) a determination by said licensing module of whether said party has a valid license to sell the products associated with said sales transaction.

2. (Original) The system of claim 2 wherein said licensing module is further configured to determine if a party associated with said sales transaction comprises a valid appointment.

3. (Original) The system of claim 1 wherein said plurality of modules further comprises a distributor administration module configured to manage information associated with a plurality of distributors.

4. (Original) The system of claim 1 wherein said selling agreement comprises compensation components.

5. (Original) The system of claim 4 wherein said selling agreement comprises document components.

6. (Original) The system of claim 5 wherein said selling agreements module configured to generate said selling agreement utilizes a configuration engine to determine which of said compensation components and said document components to include.

7. (Original) The method of claim 6 wherein said commission module accesses a commission engine to determine said commission amounts.

8. (Original) The system of claim 1 wherein said selling agreement comprises a binding contract between an institution having at least one product and a distributor.

9. (Original) The system of claim 8 wherein said institution comprises financial institution.

10. (Original) The system of claim 8 wherein said product comprise financial product.

11. (Original) The system of claim 10 wherein said financial product comprises life insurance.

12. (Currently Amended) A system for managing relationships between a first party and a second party comprising:

a database source comprising a plurality of data objects representative of at least one distributing party, at least one selling agreement and at least one license or appointment associated with said at least one distributing party; and

a distributor management engine configured to obtain at least one of said plurality of data objects from said database source and determine whether said at least one distributing party conforms with said at least one selling agreement and said at least one license or appointment is valid.

13. (Original) The system of claim 12 further comprising:

Ex. 1002 372/597

a backbone coupled to said distributor management engine, said backbone configured to transport said at least one of said plurality of data objects.

14. (Original) The system of claim 12 further comprising:
an interface for obtaining a plurality of business rules defining relationships between an institution and said at least one distributing party.

15. (Original) The system of claim 13 further comprising:
a commission engine configured to utilize said backbone to fetch said at least one selling agreement from said database source.

16. (Original) The system of claim 15 wherein said commission engine generates commission schemes utilized to model a set of selling agreement objects.

17. (Original) The system of claim 16 wherein said distributor management engine generates payments based on said selling agreement objects.

18. (Original) The system of claim 12 further comprising:
a workflow process engine configured to process workflow events.

19. (Original) The system of claim 18 wherein said workflow process events are determined by business rules defined by a user.

20. (Original) The system of claim 19 further comprising:
a commerce configuration engine configured to provide a configuration engine access to said business rules.

21. (Original) The system of claim 12 further comprising:
a report engine configured to generate a plurality of reports associated with said at least one distributing party.

22. (Original) The system of claim 21 wherein said report engine utilizes report templates to generate said plurality of reports.

23. (Original) The system of claim 12 further comprising:

a distributor administration module for managing said plurality of data objects.

24. (Original) The system of claim 12 further comprising:

a licensing and appointment module configured to enable an institution to manage said at least one license or appointments data object for at least one said distributor.

25. (Original) The system of claim 24 wherein said licensing and appointment module is configured to validate license or appointment compliance with a set of industry regulations by evaluating said at least one license or appointment data object.

26. (Original) The system of claim 12 further comprising:

a selling agreements module configured to enable said institution to define and create a business contract with said at least one distributing party.

27. (Original) The system of claim 26 wherein said selling agreements module manages a set of business rules governing how contract components are combined into said at least one selling agreement associated with each of said at least one distributing party.

28. (Original) The system of claim 27 further comprising:

a debt management module configured to enable said institution to manage distributor advances and repayments.

29. (Original) The system of claim 28 wherein said debt management module is utilized to define and manage a set of payment rules defining parameters for paying said at least one distributing party.

30. (Original) The system of claim 12 further comprising:

a net pay module enabling said institution to track and calculate payments to distributors.

31. (Original) The system of claim 12 wherein said institution comprises a financial services institution.

32. (Currently Amended) A system for managing relationships between a first party and a second party comprising:

Ex. 1002 374/597

an interface for obtaining a plurality of business rules defining relationships between an institution and at least one distributor;

a database source comprising a plurality of data objects representative of said at least one distributor, at least one selling agreement and at least one license or appointment associated with said at least one distributor;

a commission engine configured to determine a commission amount associated with said at least one distributor by evaluating said at least one selling agreement data object;

a backbone coupled to said distributor management engine, said backbone configured to transport said at least one of said plurality of data objects to a plurality of modules;

said plurality of modules comprising, a distributor administration module for managing said plurality of data objects;

said plurality of modules comprising, a licensing and appointment module configured to determine if said at least one license or appointment data object associated with said at least one distributor is in compliance with a set of industry regulations;

said plurality of modules comprising, a selling agreements module configured to enable said institution to define and create a selling agreement with said at least one distributor; and

said plurality of modules comprising, a payment module configured to determine said commission amount to said at least one distributor.

33. (Original) The system of claim 32 wherein said commission engine utilizes said backbone to fetch said at least one selling agreement from said database source.

34. (Original) The system of claim 32 further comprising:

a workflow process engine configured to process workflow events, said workflow process events determined by said business rules.

35. (Original) The system of claim 32 further comprising:

a commerce configuration engine configured to provide access to said business rules.

36. (Original) The system of claim 32 further comprising:

a report engine configured to generate a plurality of reports associated with said at least one distributor.

37. (Original) The system of claim 36 wherein said report engine utilizes report templates to generate said plurality of reports.

38. (Original) The system of claim 32 wherein said selling agreement comprises a contract between said institution and said at least one distributor.

39. (Original) The system of claim 38 wherein said selling agreements module manages a set of business rules governing how contract components are combined into said at least one selling agreement associated with each of said at least one distributors.

40. (Original) The system of claim 32 further comprising:

a debt management module configured to enable said institution to manage distributor advances and repayments.

41. (Original) The system of claim 28 wherein said debt management module is utilized to define and manage a set of payment rules defining parameters for paying said at least one distributor.

42. (Original) The system of claim 12 wherein said institution comprises a financial services institution.

43. - 64. (Canceled).

REMARKS

Claims 1-42 are pending.

Claims 1-42 stand rejected.

Claims 1, 12, and 32 have been amended to correct minor informalities.

Claim Rejections - 35 U.S.C. § 103

Claims 1-42 stand rejected under 35 U.S.C. § 103(a) as being unpatentable over U.S. Patent No. 7,124,101 to Mikurak (hereinafter "*Mikurak*") in view of common knowledge. Applicants respectfully traverse the rejection.

The Examiner relies upon *Mikurak* and "common knowledge" (referenced herein as "Common Knowledge") to establish a *prima facie* case of obviousness. Applicants respectfully agree that *Mikurak* lacks multiple features of the claimed invention, and Applicants respectfully traverse the assertion that the Common Knowledge is actually common knowledge. Additionally, even if the asserted Common Knowledge is common knowledge, Applicants respectfully submit that *Mikurak* in view of the Common Knowledge fail to teach or suggest the present invention.

Mikurak Lacks Sufficient Teachings and Suggestions

Mikurak relates to "Asset tracking in a network-based supply chain environment" and controlling the network-and managing resources for managing network assets through in (sic) a network-based supply chain framework." *Mikurak*, Title and Abstract.

Mikurak states that the:

> present invention provides a new kind of web architecture framework (called "WAF" in this document) that secures, administers, and audits electronic information use. WAF also features fundamentally important capabilities for managing content that travels "across" the "information highway." These capabilities comprise a rights protection solution that serves all electronic community members. These members include content creators and distributors, financial service providers, end-users, and others. WAF is the first general purpose, configurable, transaction control/rights protection solution for users of computers, other electronic appliances, networks, and the information highway. *Id.*, col. 82, lines 31-43.

Mikurak continues that "WAF supports a general purpose foundation for secure transaction management, including usage control, auditing, reporting, and/or payment." *Id.*, col. 89, lines 16-18. *Mikurak* continues:

> The present invention allows content providers and users to formulate their transaction environment to accommodate: (1) desired content models, content control models, and content usage information pathways, (2) a complete range of electronic media and distribution means, (3) a broad range of pricing, payment, and auditing strategies, (4) very flexible privacy and/or reporting models, (5) practical and effective security architectures, and (6) other administrative procedures that together with steps (1) through (5) can enable most "real world" electronic commerce and data security models, including models unique to the electronic world.
>
> WAF's transaction management capabilities can enforce: (1) privacy rights of users related to information regarding their usage of electronic information and/or appliances, (2) societal policy such as laws that protect rights of content users or require the collection of taxes derived from electronic transaction revenue, and (3) the proprietary and/or other rights of parties related to ownership of, distribution of, and/or other commercial rights related to, electronic information. *Id.*, col. 92, lines 33-55.

Mikurak includes some teachings regarding "automatically generating a contract between an owner of software and a user of the software." *Id.*, col. 114, lines 19-21. *Mikurak* teaches that:

> First, in operation 6402, a user is allowed to request to utilize a software package after which user input relating to the user is requested and received. See operation 6404 and 6406, respectively. Such information may include identification information such as name, address, etc. In operation 6408, a tailored license agreement is then generated by utilizing the user input. FIG. 65 illustrates a procedure for performing operation 6408. In operation 6500, the terms of the license agreement are set forth. Licensor identification information is included in operation 6501. Licensee (user) identification information is set forth in operation 6502. Optionally, verification of identification may be performed in operation 6503, such as prompting a user to enter his or her telephone number and cross referencing the input number with telephone listings. *Id.*, lines 21-35.

Mikurak continues by describing using different licensing schemes such as personal, site, limited user, and concurrent user licenses depending upon the intended use of the software, e.g. individual personal computer, network environment, client-server, site, etc. *Id.*, col. 114, line 53 - col. 118, line 30.

Mikurak also discloses a "contract negotiation process" illustrated in Fig. 132. *Id.*, col. 281, line 38. *Mikurak* describes an embodiment of the contract negotiation process in col. 281, line 38-col. 282, line 7.

Initially, Applicants respectfully submit that *Mikurak* is addressing agreements with different types of concerns than the concerns addressed by the present invention. Applicants respectfully submit that despite all of *Mikurak*'s 285 pages, including the Certificate of Correction, *Mikurak* never mentions, discusses, teaches, nor suggests "a plurality of modules configured to manage distributor information" where said plurality of modules comprise:

> a commission module configured to determine commission amounts associated with a sales transaction based on said selling agreement
>
> a licensing module configured to determine if a party associated with said sales transaction has a valid license to sell products associated with the sales transaction; and
>
> a payment module for determining payment associated with said sales transaction to said party in accordance with (i) a determination of said commission amounts determined by said commission module and (ii) a determination by said licensing module of whether said party has a valid license to sell the products associated with said sales transaction. Claim 1.

Mikurak's discussion of distributors relates to "electronic community members." *Id.*, col. 82, line 37. "These members include content creators and distributors, financial service providers, end-users, and others." *Id.*, lines 38-39. The distributors relate to distributors of content and of appliances related to content. *Id.*, col. 133, lines 17-22. For example, "Content providers who employ the present invention may include, for example, software application and game publishers, database publishers, cable, television, and radio broadcasters, electronic shopping vendors, and distributors of information in electronic document, book, periodical, e-mail and/or other forms." *Id.*, col. 173, lines 25-30. Not only does *Mikurak* neither teach nor suggest the foregoing aspects of claim 1, Applicants have been unable to locate any recognition by *Mikurak* that a distributor would need a valid license to receive a commission payment.

The relevancy of the foregoing will be apparent in the subsequent discussion regarding the combination of *Mikurak* and the Common Knowledge.

Challenge to Assertion of "Common Knowledge"

The Examiner has rejected the present claims as obvious over *Mikurak* in view of Common Knowledge. Applicants respectfully submit that the Common Knowledge is not in actuality 'common knowledge'.

The Manual of Patent Examining Procedure (MPEP) § 2144.03 provides guidance on the appropriateness of relying on common knowledge in the rejection of an applicants' claimed invention. The MPEP states that:

> Official notice unsupported by documentary evidence should only be taken by the examiner where the facts asserted to be well-known, or to be common knowledge in the art are capable of instant and unquestionable demonstration as being well-known. As noted by the court in *In re Ahlert*, 424 F.2d 1088, 1091, 165 USPQ 418, 420 (CCPA 1970), the notice of facts beyond the record which may be taken by the examiner must be "capable of such instant and unquestionable demonstration as to defy dispute" (citing *In re Knapp Monarch Co.*, 296 F.2d 230, 132 USPQ 6 (CCPA 1961)). ... It is never appropriate to rely solely on "common knowledge" in the art without evidentiary support in the record, as the principal evidence upon which a rejection was based. *Zurko*, 258 F.3d at 1385, 59 USPQ2d at 1697. MPEP § 2144.03(A).

The Office has relied upon common knowledge as to the existence of multiple elements of claim 1, for example:

> a commission module configured to determine commission amounts associated with a sales transaction based on said selling agreement
>
> a licensing module configured to determine if a party associated with said sales transaction has a valid license to sell products associated with the sales transaction; and
>
> a payment module for determining payment associated with said sales transaction to said party in accordance with (i) a determination of said commission amounts determined by said commission module and (ii) a determination by said licensing module of whether said party has a valid license to sell the products associated with said sales transaction. Claim 1.

Applicants respectfully submit that although it was well-known that sales agents are supposed to have licenses to conduct certain types of sales transactions, a system for managing relationships between a first party and a second party that includes the above cited elements is not obvious. The Background section of the present application states that "any plan for distribution

channel management must consider the number of channels, the number of distributors, compensation complexity, regulatory and licensing requirements and the number and types of products that will be sold." Present Application, Background, p. 3, lines 10-13. Thus, the present application recognizes that licensing requirements are known. The Background section of the present application also asserts that "The distribution channel model within the financial services industry is very complex." *Id.*, lines 1-2. Furthermore, "Credential management is a critical issue for many firms." *Id.*, p. 8, line 1. "This need [to track accreditation] is made more acute by constantly changing governmental rules and regulations, as well as by different regulations imposed by the different jurisdictions in which a firm operates." *Id.*, lines 8-11.

Although the necessity of licensed individuals in certain sales transaction contexts was well-known, Applicants respectfully submit, and have documented in the Present Application, that such recognition does not teach or suggest an enabling solution to a very complex problem such as:

> … a plurality of modules configured to manage distributor information;
>
> said plurality of modules comprising a selling agreements module configured to generate a selling agreement;
>
> said plurality of modules comprising a commission module configured to determine commission amounts associated with a sales transaction based on said selling agreement;
>
> said plurality of modules comprising a licensing module configured to determine if a party associated with said sales transaction has a valid license to sell products associated with the sales transaction; and
>
> said plurality of modules comprising a payment module for determining payment associated with said sales transaction to said party in accordance with (i) a determination of said commission amounts determined by said commission module and (ii) a determination by said licensing module of whether said party has a valid license to sell the products associated with said sales transaction.

Accordingly, Applicants respectfully request the Examiner to provide documentary evidence to support all of the Examiner's conclusions regarding common knowledge including that "licensing modules and appointments to determine commission amounts are common knowledge in the licensing and transaction art." Office Action, p. 3.

***Mikurak* Lacks Sufficient Teachings and Suggestions of a Need or Usefulness of, e.g. a commission module, a licensing module and a payment module as set forth in claim 1.**

Even assuming *arguendo* that "licensing modules and appointments" are common knowledge, Applicants respectfully submit that *Mikurak* in view of the alleged Common Knowledge neither teaches nor suggests the present invention. In *KSR International Co. v. Teleflex, Inc.,* 82 USPQ2d 1385 (2007) the Court stated that:

> If a person of ordinary skill in the art can implement a predictable variation, and would see the benefit of doing so, §103 likely bars its patentability. Following these principles may be difficult if the claimed subject matter involves more than the simple **substitution** of one known element for another or the mere application of a known technique to a piece of prior art **ready for the improvement**. To determine whether there was an apparent reason to combine the known elements in the way a patent claims, it will often be necessary to look to interrelated teachings of multiple patents; to the effects of demands known to the design community or present in the marketplace; and to the background knowledge possessed by a person having ordinary skill in the art. **To facilitate review, this analysis should be made explicit.** But it need not seek out precise teachings directed to the challenged claim's specific subject matter, for a court can consider the inferences and creative steps a person of ordinary skill in the art would employ.

Applicants respectfully submit that the elements cited as Common Knowledge in the Office Action are not substitutions for elements taught by *Mikurak* because, as admitted in the Office Action, *Mikurak* lacks any teachings or suggestions or the missing elements.

Additionally, Applicants respectfully submit that the *Mikurak* prior art does not evidence the mere application of a known technique to a piece of prior art **ready for the improvement** because, as previously discussed, although agreements and distributors are discussed in *Mikurak*, Applicants have been unable to locate any recognition in *Mikurak* that a distributor described in *Mikurak* would need a valid license to receive a commission payment. Thus, there is no evidence in the record that *Mikurak* is "ready for the improvement" of the claimed invention.

Because *Mikurak* apparently contains no teaching or suggestion that a distributor in *Mikurak* would need a valid license to receive a commission payment, there is no apparent reason to combine *Mikurak* with the alleged Common Knowledge as required by *KSR*.

Additionally, for at least the same reasons, Applicants respectfully submit that *Mikurak* in view of the alleged Common Knowledge neither teaches nor suggests:

> a database source comprising a plurality of data objects representative of at least one distributing party, at least one selling agreement and at least one license or appointment associated with said at least one distributing party; and
>
> a distributor management engine configured to obtain at least one of said plurality of data objects from said database source and determine whether said at least one distributing party conforms with said at least one selling agreement and said at least one license or appointment is valid. **Claim 12**.

Additionally, for at least the same reasons, Applicants respectfully submit that *Mikurak* in view of the alleged Common Knowledge neither teaches nor suggests:

> a database source comprising a plurality of data objects representative of said at least one distributor, at least one selling agreement and at least one license or appointment associated with said at least one distributor;
>
> a commission engine configured to determine a commission amount associated with said at least one distributor by evaluating said at least one selling agreement data object;
>
> …
>
> said plurality of modules comprising, a licensing and appointment module configured to determine if said at least one license or appointment data object associated with said at least one distributor is in compliance with a set of industry regulations;
>
> said plurality of modules comprising, a selling agreements module configured to enable said institution to define and create a selling agreement with said at least one distributor; and
>
> said plurality of modules comprising, a payment module configured to determine said commission amount to said at least one distributor. **Claim 32.**

Additionally, for at least the same reasons, Applicants respectfully submit that *Mikurak* in view of the alleged Common Knowledge neither teaches nor suggests:

> The system of claim 18 wherein said workflow process events are determined by business rules defined by a user. **Claim 19.**

Additionally, for at least the same reasons, Applicants respectfully submit that *Mikurak* in view of the alleged Common Knowledge neither teaches nor suggests:

The system of claim 38 wherein said selling agreements module manages a set of business rules governing how contract components are combined into said at least one selling agreement associated with each of said at least one distributors. **Claim 39.**

Accordingly, for at least the foregoing reasons, Applicants respectfully submit that claims 1, 12, and 32 and claims directly or indirectly thereon are allowable.

Applicants respectfully request withdrawal of the rejection.

CONCLUSION

In view of the amendments and remarks set forth herein, the application is believed to be in condition for allowance and a notice to that effect is solicited. Nonetheless, should any issues remain that might be subject to resolution through a telephonic interview, the examiner is requested to telephone the undersigned at 512-338-9100.

CERTIFICATE OF TRANSMISSION

I hereby certify that on June 11, 2008 this correspondence is being transmitted via the U.S. Patent & Trademark Office's electronic filing system.

/Kent B. Chambers/

Respectfully submitted,

/Kent B. Chambers/

Kent B. Chambers
Attorney for Applicant(s)
Reg. No. 38,839

Ex. 1002 384/597

IN THE UNITED STATES PATENT AND TRADEMARK OFFICE

Applicants:	David Chao, Brian Blount, Charles Erickson, Shari Gharavy, Cheng Zhou, Joshua Toub		
Assignee:	Versata Development Group, Inc.		
Title:	METHOD AND SYSTEM FOR MANAGING DISTRIBUTOR INFORMATION		
Serial No.:	09/810,514	Filing Date:	March 15, 2001
Examiner:	Andrew J. Rudy	Group Art Unit:	3627
Docket No.:	T00071	Customer No.:	33438

Austin, Texas
June 11, 2008

FILED ELECTRONICALLY

PETITION FOR EXTENSION OF TIME

Dear Sir:

Applicants respectfully petition for a three (3) month extension of time within which to respond to the December 11, 2007, outstanding Office Action, such extension allowing the undersigned until June 11, 2008 to respond.

The extension fee is being paid via the USPTO EFS. Please deduct any additional fee which may be necessary or credit any overpayment to Deposit Account No. 502264.

CERTIFICATE OF TRANSMISSION

I hereby certify that on June 11, 2008 this correspondence is being transmitted via the U.S. Patent & Trademark Office's electronic filing system.

/Kent B. Chambers/

Respectfully submitted,

/Kent B. Chambers/

Kent B. Chambers
Attorney for Applicant(s)
Reg. No. 38,839

Electronic Patent Application Fee Transmittal

Application Number:	09810514
Filing Date:	15-Mar-2001
Title of Invention:	Method and system for managing distributor information
First Named Inventor/Applicant Name:	David Chao
Filer:	Kent Bryan Chambers
Attorney Docket Number:	T00071

Filed as Large Entity

Utility Filing Fees

Description	Fee Code	Quantity	Amount	Sub-Total in USD($)
Basic Filing:				
Pages:				
Claims:				
Miscellaneous-Filing:				
Petition:				
Patent-Appeals-and-Interference:				
Post-Allowance-and-Post-Issuance:				
Extension-of-Time:				
Extension - 3 months with $0 paid	1253	1	1050	1050

Ex. 1002 386/592

Description	Fee Code	Quantity	Amount	Sub-Total in USD($)
Miscellaneous:				
			Total in USD ($)	**1050**

Electronic Acknowledgement Receipt

EFS ID:	3441945
Application Number:	09810514
International Application Number:	
Confirmation Number:	6193
Title of Invention:	Method and system for managing distributor information
First Named Inventor/Applicant Name:	David Chao
Customer Number:	33438
Filer:	Kent Bryan Chambers
Filer Authorized By:	
Attorney Docket Number:	T00071
Receipt Date:	11-JUN-2008
Filing Date:	15-MAR-2001
Time Stamp:	18:59:10
Application Type:	Utility under 35 USC 111(a)

Payment information:

Submitted with Payment	yes
Payment Type	Credit Card
Payment was successfully received in RAM	$ 1050
RAM confirmation Number	4205
Deposit Account	
Authorized User	

File Listing:

Document Number	Document Description	File Name	File Size(Bytes) /Message Digest	Multi Part /.zip	Pages (if appl.)
		Ex. 1002 [illegible]			

1	Amendment - After Non-Final Rejection	T00071_ROA_12_11_07.pdf	141254 464fbd9738bd07865ea8ac690b6f506618fd5dcc	no	15
Warnings:					
Information:					
2	Extension of Time	T00071_Extension_12_11_07.pdf	70165 d4ebd72faf5e833b89edb8f8e15adc9c13f1e1db	no	1
Warnings:					
Information:					
3	Fee Worksheet (PTO-06)	fee-info.pdf	8133 6c5c6e1e0feedd5b13185652c67d153e17f16f1d	no	2
Warnings:					
Information:					
			Total Files Size (in bytes):	219552	

This Acknowledgement Receipt evidences receipt on the noted date by the USPTO of the indicated documents, characterized by the applicant, and including page counts, where applicable. It serves as evidence of receipt similar to a Post Card, as described in MPEP 503.

New Applications Under 35 U.S.C. 111
If a new application is being filed and the application includes the necessary components for a filing date (see 37 CFR 1.53(b)-(d) and MPEP 506), a Filing Receipt (37 CFR 1.54) will be issued in due course and the date shown on this Acknowledgement Receipt will establish the filing date of the application.

National Stage of an International Application under 35 U.S.C. 371
If a timely submission to enter the national stage of an international application is compliant with the conditions of 35 U.S.C. 371 and other applicable requirements a Form PCT/DO/EO/903 indicating acceptance of the application as a national stage submission under 35 U.S.C. 371 will be issued in addition to the Filing Receipt, in due course.

New International Application Filed with the USPTO as a Receiving Office
If a new international application is being filed and the international application includes the necessary components for an international filing date (see PCT Article 11 and MPEP 1810), a Notification of the International Application Number and of the International Filing Date (Form PCT/RO/105) will be issued in due course, subject to prescriptions concerning national security, and the date shown on this Acknowledgement Receipt will establish the international filing date of the application.

PTO/SB/06 (07-06)
Approved for use through 1/31/2007. OMB 0651-0032
U.S. Patent and Trademark Office; U.S. DEPARTMENT OF COMMERCE
Under the Paperwork Reduction Act of 1995, no persons are required to respond to a collection of information unless it displays a valid OMB control number.

PATENT APPLICATION FEE DETERMINATION RECORD

Substitute for Form PTO-875

Application or Docket Number	Filing Date	☐ To be Mailed
09/810,514	03/15/2001	

APPLICATION AS FILED – PART I

FOR	(Column 1) NUMBER FILED	(Column 2) NUMBER EXTRA	SMALL ENTITY ☐ RATE ($)	SMALL ENTITY ☐ FEE ($)	OR	OTHER THAN SMALL ENTITY RATE ($)	OTHER THAN SMALL ENTITY FEE ($)
☐ BASIC FEE (37 CFR 1.16(a), (b), or (c))	N/A	N/A	N/A			N/A	
☐ SEARCH FEE (37 CFR 1.16(k), (i), or (m))	N/A	N/A	N/A			N/A	
☐ EXAMINATION FEE (37 CFR 1.16(o), (p), or (q))	N/A	N/A	N/A			N/A	
TOTAL CLAIMS (37 CFR 1.16(i))	minus 20 =	*	X $ =		OR	X $ =	
INDEPENDENT CLAIMS (37 CFR 1.16(h))	minus 3 =	*	X $ =			X $ =	
☐ APPLICATION SIZE FEE (37 CFR 1.16(s))	If the specification and drawings exceed 100 sheets of paper, the application size fee due is $250 ($125 for small entity) for each additional 50 sheets or fraction thereof. See 35 U.S.C. 41(a)(1)(G) and 37 CFR 1.16(s).						
☐ MULTIPLE DEPENDENT CLAIM PRESENT (37 CFR 1.16(j))							
* If the difference in column 1 is less than zero, enter "0" in column 2.			TOTAL			TOTAL	

APPLICATION AS AMENDED – PART II

AMENDMENT	06/11/2008	(Column 1) CLAIMS REMAINING AFTER AMENDMENT		(Column 2) HIGHEST NUMBER PREVIOUSLY PAID FOR	(Column 3) PRESENT EXTRA	SMALL ENTITY RATE ($)	SMALL ENTITY ADDITIONAL FEE ($)	OR	OTHER THAN SMALL ENTITY RATE ($)	OTHER THAN SMALL ENTITY ADDITIONAL FEE ($)
	Total (37 CFR 1.16(i))	* 42	Minus	** 64	= 0	X $ =		OR	X $50=	0
	Independent (37 CFR 1.16(h))	* 3	Minus	***5	= 0	X $ =		OR	X $210=	0
	☐ Application Size Fee (37 CFR 1.16(s))									
	☐ FIRST PRESENTATION OF MULTIPLE DEPENDENT CLAIM (37 CFR 1.16(j))							OR		
						TOTAL ADD'L FEE		OR	TOTAL ADD'L FEE	0

AMENDMENT		(Column 1) CLAIMS REMAINING AFTER AMENDMENT		(Column 2) HIGHEST NUMBER PREVIOUSLY PAID FOR	(Column 3) PRESENT EXTRA	RATE ($)	ADDITIONAL FEE ($)	OR	RATE ($)	ADDITIONAL FEE ($)
	Total (37 CFR 1.16(i))	*	Minus	**	=	X $ =		OR	X $ =	
	Independent (37 CFR 1.16(h))	*	Minus	***	=	X $ =		OR	X $ =	
	☐ Application Size Fee (37 CFR 1.16(s))									
	☐ FIRST PRESENTATION OF MULTIPLE DEPENDENT CLAIM (37 CFR 1.16(j))							OR		
						TOTAL ADD'L FEE		OR	TOTAL ADD'L FEE	

* If the entry in column 1 is less than the entry in column 2, write "0" in column 3.

** If the "Highest Number Previously Paid For" IN THIS SPACE is less than 20, enter "20".

*** If the "Highest Number Previously Paid For" IN THIS SPACE is less than 3, enter "3".

The "Highest Number Previously Paid For" (Total or Independent) is the highest number found in the appropriate box in column 1.

Legal Instrument Examiner:
/RAMONA D. WILSON/

This collection of information is required by 37 CFR 1.16. The information is required to obtain or retain a benefit by the public which is to file (and by the USPTO to process) an application. Confidentiality is governed by 35 U.S.C. 122 and 37 CFR 1.14. This collection is estimated to take 12 minutes to complete, including gathering, preparing, and submitting the completed application form to the USPTO. Time will vary depending upon the individual case. Any comments on the amount of time you require to complete this form and/or suggestions for reducing this burden, should be sent to the Chief Information Officer, U.S. Patent and Trademark Office, U.S. Department of Commerce, P.O. Box 1450, Alexandria, VA 22313-1450. DO NOT SEND FEES OR COMPLETED FORMS TO THIS ADDRESS. **SEND TO: Commissioner for Patents, P.O. Box 1450, Alexandria, VA 22313-1450.**

If you need assistance in completing the form, call 1-800-PTO-9199 and select option 2.

UNITED STATES PATENT AND TRADEMARK OFFICE

UNITED STATES DEPARTMENT OF COMMERCE
United States Patent and Trademark Office
Address: COMMISSIONER FOR PATENTS
P.O. Box 1450
Alexandria, Virginia 22313-1450
www.uspto.gov

APPLICATION NO.	FILING DATE	FIRST NAMED INVENTOR	ATTORNEY DOCKET NO.	CONFIRMATION NO.
09/810,514	03/15/2001	David Chao	T00071	6193

33438 7590 10/06/2008

HAMILTON & TERRILE, LLP
P.O. BOX 203518
AUSTIN, TX 78720

EXAMINER	
RUDY, ANDREW J	

ART UNIT	PAPER NUMBER
3687	

NOTIFICATION DATE	DELIVERY MODE
10/06/2008	ELECTRONIC

Please find below and/or attached an Office communication concerning this application or proceeding.

The time period for reply, if any, is set in the attached communication.

Notice of the Office communication was sent electronically on above-indicated "Notification Date" to the following e-mail address(es):

docketing@hamiltonterrile.com
tmunoz@hamiltonterrile.com

Office Action Summary	Application No.	Applicant(s)	
	09/810,514	CHAO ET AL.	
	Examiner	Art Unit	
	Andrew Joseph Rudy	3687	

-- The MAILING DATE of this communication appears on the cover sheet with the correspondence address --

Period for Reply

A SHORTENED STATUTORY PERIOD FOR REPLY IS SET TO EXPIRE *3* MONTH(S) OR THIRTY (30) DAYS, WHICHEVER IS LONGER, FROM THE MAILING DATE OF THIS COMMUNICATION.

- Extensions of time may be available under the provisions of 37 CFR 1.136(a). In no event, however, may a reply be timely filed after SIX (6) MONTHS from the mailing date of this communication.
- If NO period for reply is specified above, the maximum statutory period will apply and will expire SIX (6) MONTHS from the mailing date of this communication.
- Failure to reply within the set or extended period for reply will, by statute, cause the application to become ABANDONED (35 U.S.C. § 133). Any reply received by the Office later than three months after the mailing date of this communication, even if timely filed, may reduce any earned patent term adjustment. See 37 CFR 1.704(b).

Status

1)☒ Responsive to communication(s) filed on *11 June 2008*.

2a)☒ This action is **FINAL**. 2b)☐ This action is non-final.

3)☐ Since this application is in condition for allowance except for formal matters, prosecution as to the merits is closed in accordance with the practice under *Ex parte Quayle*, 1935 C.D. 11, 453 O.G. 213.

Disposition of Claims

4)☒ Claim(s) *1-42* is/are pending in the application.

4a) Of the above claim(s) _____ is/are withdrawn from consideration.

5)☐ Claim(s) _____ is/are allowed.

6)☒ Claim(s) *1-42* is/are rejected.

7)☐ Claim(s) _____ is/are objected to.

8)☐ Claim(s) _____ are subject to restriction and/or election requirement.

Application Papers

9)☐ The specification is objected to by the Examiner.

10)☐ The drawing(s) filed on _____ is/are: a)☐ accepted or b)☐ objected to by the Examiner.

Applicant may not request that any objection to the drawing(s) be held in abeyance. See 37 CFR 1.85(a).

Replacement drawing sheet(s) including the correction is required if the drawing(s) is objected to. See 37 CFR 1.121(d).

11)☐ The oath or declaration is objected to by the Examiner. Note the attached Office Action or form PTO-152.

Priority under 35 U.S.C. § 119

12)☐ Acknowledgment is made of a claim for foreign priority under 35 U.S.C. § 119(a)-(d) or (f).

a)☐ All b)☐ Some * c)☐ None of:

1.☐ Certified copies of the priority documents have been received.

2.☐ Certified copies of the priority documents have been received in Application No. _____.

3.☐ Copies of the certified copies of the priority documents have been received in this National Stage application from the International Bureau (PCT Rule 17.2(a)).

* See the attached detailed Office action for a list of the certified copies not received.

Attachment(s)

1) ☒ Notice of References Cited (PTO-892)
2) ☐ Notice of Draftsperson's Patent Drawing Review (PTO-948)
3) ☒ Information Disclosure Statement(s) (PTO/SB/08) Paper No(s)/Mail Date *5/8/08 & 1/8/08*.
4) ☐ Interview Summary (PTO-413) Paper No(s)/Mail Date. _____ .
5) ☐ Notice of Informal Patent Application
6) ☐ Other: _____.

DETAILED ACTION

1. Claims 1-42 are pending. Applicant cancelled claims 43-64.

Claim Rejections - 35 USC § 103

2. Claims 1-42 are rejected under 35 U.S.C. 103(a) as being unpatentable over Carrott, 6,782,369 in view of Ghosh, 2001/0032094

Carrott discloses, e.g. Figs. 1-5 and related text, a computer program for allocating sales commissions comprising processing sales transaction data, capturing transaction data and determining. Carrott does not disclose determining if sales representative associated with the transaction has a valid license to sell products associated with a sales transaction.

Ghosh discloses sales representative associated with the transaction has a valid license to sell products associated with a sales transaction. It would have been obvious to one having ordinary skill in the art at the time the invention was made to incorporate the teachings of Carrott with those of Ghosh to provide licensed sales representatives. The motivation for having done such would have been to use common knowledge to ensure proper compliance with regulatory schemes.

Applicant's June 11, 2008 REMARKS with respect to claims 1-42 have been considered but are moot in view of the new grounds of rejection.

3. Applicant's Information Disclosure Statements (IDS's) received May 8, 2008 and January 8, 2008 have been reviewed. Note the attached IDS's.

4. Applicant's amendment necessitated the new ground(s) of rejection presented in this Office action. Accordingly, **THIS ACTION IS MADE FINAL**. See MPEP § 706.07(a). Applicant is reminded of the extension of time policy as set forth in 37 CFR 1.136(a).

A shortened statutory period for reply to this final action is set to expire THREE MONTHS from the mailing date of this action. In the event a first reply is filed within TWO MONTHS of the mailing date of this final action and the advisory action is not mailed until after the end of the THREE-MONTH shortened statutory period, then the shortened statutory period will expire on the date the advisory action is mailed, and any extension fee pursuant to 37 CFR 1.136(a) will be calculated from the mailing date of the advisory action. In no event, however, will the statutory period for reply expire later than SIX MONTHS from the date of this final action.

5. Any inquiry concerning this communication or earlier communications from the examiner should be directed to Andrew Joseph Rudy whose telephone number is 571-272-6789. The examiner can normally be reached on Monday thru Friday.

If attempts to reach the examiner by telephone are unsuccessful, the examiner's supervisor, Matthew S. Gart can be reached on 571-272-3955. The fax phone number for the organization where this application or proceeding is assigned is 571-273-8300.

Information regarding the status of an application may be obtained from the Patent Application Information Retrieval (PAIR) system. Status information for published applications may be obtained from either Private PAIR or Public PAIR. Status information for unpublished applications is available through Private PAIR only. For more information about the PAIR system, see http://pair-direct.uspto.gov. Should you have questions on access to the Private PAIR system, contact the Electronic Business Center (EBC) at 866-217-9197 (toll-free). If you would like assistance from a USPTO Customer Service Representative or access to the automated information system, call 800-786-9199 (IN USA OR CANADA) or 571-272-1000.

/Andrew Joseph Rudy/
Primary Examiner, Art Unit 3687

Notice of References Cited	Application/Control No. 09/810,514	Applicant(s)/Patent Under Reexamination CHAO ET AL.	
	Examiner Andrew Joseph Rudy	Art Unit 3687	Page 1 of 1

U.S. PATENT DOCUMENTS

*		Document Number Country Code-Number-Kind Code	Date MM-YYYY	Name	Classification
*	A	US-6,782,369	08-2004	Carrott, Richard F.	705/1
*	B	US-2001/0032094	10-2001	Ghosh et al.	705/1
	C	US-			
	D	US-			
	E	US-			
	F	US-			
	G	US-			
	H	US-			
	I	US-			
	J	US-			
	K	US-			
	L	US-			
	M	US-			

FOREIGN PATENT DOCUMENTS

*		Document Number Country Code-Number-Kind Code	Date MM-YYYY	Country	Name	Classification
	N					
	O					
	P					
	Q					
	R					
	S					
	T					

NON-PATENT DOCUMENTS

*		Include as applicable: Author, Title Date, Publisher, Edition or Volume, Pertinent Pages)
	U	
	V	
	W	
	X	

*A copy of this reference is not being furnished with this Office action. (See MPEP § 707.05(a).)
Dates in MM-YYYY format are publication dates. Classifications may be US or foreign.

PTO/SB/08a (05-07)
Approved for use through 09/30/2007. OMB 0651-0031
U.S. Patent and Trademark Office; U.S. DEPARTMENT OF COMMERCE
Under the Paperwork Reduction Act of 1995, no persons are required to respond to a collection of information unless it contains a valid OMB control number.

INFORMATION DISCLOSURE STATEMENT BY APPLICANT (**Not for submission under 37 CFR 1.99)**	Application Number	09810514
	Filing Date	2001-03-15
	First Named Inventor	David Chao
	Art Unit	3627
	Examiner Name	Andrew J. Rudy
	Attorney Docket Number	T00071

U.S.PATENTS

Examiner Initial*	Cite No	Patent Number	Kind Code[1]	Issue Date	Name of Patentee or Applicant of cited Document	Pages,Columns,Lines where Relevant Passages or Relevant Figures Appear
	1	6847935	B1	2005-01-25	Solomon et al.	
	2	6636852	B2	2003-10-21	Gozdeck et al.	

If you wish to add additional U.S. Patent citation information please click the Add button.

U.S.PATENT APPLICATION PUBLICATIONS

Examiner Initial*	Cite No	Publication Number	Kind Code[1]	Publication Date	Name of Patentee or Applicant of cited Document	Pages,Columns,Lines where Relevant Passages or Relevant Figures Appear
	1	20010047299	A1	2001-11-29	Brewer et al.	

If you wish to add additional U.S. Published Application citation information please click the Add button.

FOREIGN PATENT DOCUMENTS

Examiner Initial*	Cite No	Foreign Document Number[3]	Country Code[2] i	Kind Code[4]	Publication Date	Name of Patentee or Applicant of cited Document	Pages,Columns,Lines where Relevant Passages or Relevant Figures Appear	T[5]
	1							☐

If you wish to add additional Foreign Patent Document citation information please click the Add button

NON-PATENT LITERATURE DOCUMENTS

ALL REFERENCES CONSIDERED EXCEPT WHERE LINED THROUGH. / AR/

INFORMATION DISCLOSURE STATEMENT BY APPLICANT

(**Not for submission under 37 CFR 1.99)**

Application Number	09810514
Filing Date	2001-03-15
First Named Inventor	David Chao
Art Unit	3627
Examiner Name	Andrew J. Rudy
Attorney Docket Number	T00071

Examiner Initials*	Cite No	Include name of the author (in CAPITAL LETTERS), title of the article (when appropriate), title of the item (book, magazine, journal, serial, symposium, catalog, etc), date, pages(s), volume-issue number(s), publisher, city and/or country where published.	T[5]
	1		☐

If you wish to add additional non-patent literature document citation information please click the Add button

EXAMINER SIGNATURE

Examiner Signature	/Andrew Joseph Rudy/	Date Considered	09/27/2008

*EXAMINER: Initial if reference considered, whether or not citation is in conformance with MPEP 609. Draw line through a citation if not in conformance and not considered. Include copy of this form with next communication to applicant.

[1] See Kind Codes of USPTO Patent Documents at www.USPTO.GOV or MPEP 901.04. [2] Enter office that issued the document, by the two-letter code (WIPO Standard ST.3). [3] For Japanese patent documents, the indication of the year of the reign of the Emperor must precede the serial number of the patent document. [4] Kind of document by the appropriate symbols as indicated on the document under WIPO Standard ST.16 if possible. [5] Applicant is to place a check mark here if English language translation is attached.

ALL REFERENCES CONSIDERED EXCEPT WHERE LINED THROUGH. / AR/

PTO/SB/08a (05-07)
Approved for use through 09/30/2007. OMB 0651-0031
U.S. Patent and Trademark Office; U.S. DEPARTMENT OF COMMERCE
Under the Paperwork Reduction Act of 1995, no persons are required to respond to a collection of information unless it contains a valid OMB control number.

INFORMATION DISCLOSURE STATEMENT BY APPLICANT (**Not for submission under 37 CFR 1.99)**	Application Number	09810514
	Filing Date	2001-03-15
	First Named Inventor	David Chao
	Art Unit	3627
	Examiner Name	Andrew J. Rudy
	Attorney Docket Number	T00071

U.S.PATENTS

Examiner Initial*	Cite No	Patent Number	Kind Code[1]	Issue Date	Name of Patentee or Applicant of cited Document	Pages,Columns,Lines where Relevant Passages or Relevant Figures Appear
	1	5446653		1995-08-29	Miller et al.	
	2	5692206		1997-11-25	Shirley et al.	
	3	7007227		2006-02-28	Constantino et al.	

If you wish to add additional U.S. Patent citation information please click the Add button.

U.S.PATENT APPLICATION PUBLICATIONS

Examiner Initial*	Cite No	Publication Number	Kind Code[1]	Publication Date	Name of Patentee or Applicant of cited Document	Pages,Columns,Lines where Relevant Passages or Relevant Figures Appear
	1					

If you wish to add additional U.S. Published Application citation information please click the Add button.

FOREIGN PATENT DOCUMENTS

Examiner Initial*	Cite No	Foreign Document Number[3]	Country Code[2] i	Kind Code[4]	Publication Date	Name of Patentee or Applicant of cited Document	Pages,Columns,Lines where Relevant Passages or Relevant Figures Appear	T[5]
	1							☐

ALL REFERENCES CONSIDERED EXCEPT WHERE LINED THROUGH. / AR/

INFORMATION DISCLOSURE STATEMENT BY APPLICANT (**Not for submission under 37 CFR 1.99)**		
	Application Number	09810514
	Filing Date	2001-03-15
	First Named Inventor	David Chao
	Art Unit	3627
	Examiner Name	Andrew J. Rudy
	Attorney Docket Number	T00071

If you wish to add additional Foreign Patent Document citation information please click the Add button

NON-PATENT LITERATURE DOCUMENTS

Examiner Initials*	Cite No	Include name of the author (in CAPITAL LETTERS), title of the article (when appropriate), title of the item (book, magazine, journal, serial, symposium, catalog, etc), date, pages(s), volume-issue number(s), publisher, city and/or country where published.	T[5]
	1		☐

If you wish to add additional non-patent literature document citation information please click the Add button

EXAMINER SIGNATURE

Examiner Signature	/Andrew Joseph Rudy/	Date Considered	09/27/2008

*EXAMINER: Initial if reference considered, whether or not citation is in conformance with MPEP 609. Draw line through a citation if not in conformance and not considered. Include copy of this form with next communication to applicant.

[1] See Kind Codes of USPTO Patent Documents at www.USPTO.GOV or MPEP 901.04. [2] Enter office that issued the document, by the two-letter code (WIPO Standard ST.3). [3] For Japanese patent documents, the indication of the year of the reign of the Emperor must precede the serial number of the patent document. [4] Kind of document by the appropriate symbols as indicated on the document under WIPO Standard ST.16 if possible. [5] Applicant is to place a check mark here if English language translation is attached.

ALL REFERENCES CONSIDERED EXCEPT WHERE LINED THROUGH. / AR/

PTO/SB/08a (05-07)
Approved for use through 09/30/2007. OMB 0651-0031
U.S. Patent and Trademark Office; U.S. DEPARTMENT OF COMMERCE
Under the Paperwork Reduction Act of 1995, no persons are required to respond to a collection of information unless it contains a valid OMB control number.

INFORMATION DISCLOSURE STATEMENT BY APPLICANT

(**Not for submission under 37 CFR 1.99)**

Application Number	09810514
Filing Date	2001-03-15
First Named Inventor	David Chao
Art Unit	3627
Examiner Name	Andrew J. Rudy
Attorney Docket Number	T00071

U.S.PATENTS

Examiner Initial*	Cite No	Patent Number	Kind Code[1]	Issue Date	Name of Patentee or Applicant of cited Document	Pages,Columns,Lines where Relevant Passages or Relevant Figures Appear
	1					

If you wish to add additional U.S. Patent citation information please click the Add button.

U.S.PATENT APPLICATION PUBLICATIONS

Examiner Initial*	Cite No	Publication Number	Kind Code[1]	Publication Date	Name of Patentee or Applicant of cited Document	Pages,Columns,Lines where Relevant Passages or Relevant Figures Appear
	1	20020023109	A1	2002-02-21	Lederer et al.	

If you wish to add additional U.S. Published Application citation information please click the Add button.

FOREIGN PATENT DOCUMENTS

Examiner Initial*	Cite No	Foreign Document Number[3]	Country Code[2] i	Kind Code[4]	Publication Date	Name of Patentee or Applicant of cited Document	Pages,Columns,Lines where Relevant Passages or Relevant Figures Appear	T[5]
	1							☐

If you wish to add additional Foreign Patent Document citation information please click the Add button

NON-PATENT LITERATURE DOCUMENTS

Examiner Initials*	Cite No	Include name of the author (in CAPITAL LETTERS), title of the article (when appropriate), title of the item (book, magazine, journal, serial, symposium, catalog, etc), date, pages(s), volume-issue number(s), publisher, city and/or country where published.	T[5]

INFORMATION DISCLOSURE STATEMENT BY APPLICANT (**Not for submission under 37 CFR 1.99)**		
	Application Number	09810514
	Filing Date	2001-03-15
	First Named Inventor	David Chao
	Art Unit	3627
	Examiner Name	Andrew J. Rudy
	Attorney Docket Number	T00071

	1		☐

If you wish to add additional non-patent literature document citation information please click the Add button

EXAMINER SIGNATURE

Examiner Signature		Date Considered	

*EXAMINER: Initial if reference considered, whether or not citation is in conformance with MPEP 609. Draw line through a citation if not in conformance and not considered. Include copy of this form with next communication to applicant.

[1] See Kind Codes of USPTO Patent Documents at www.USPTO.GOV or MPEP 901.04. [2] Enter office that issued the document, by the two-letter code (WIPO Standard ST.3). [3] For Japanese patent documents, the indication of the year of the reign of the Emperor must precede the serial number of the patent document. [4] Kind of document by the appropriate symbols as indicated on the document under WIPO Standard ST.16 if possible. [5] Applicant is to place a check mark here if English language translation is attached.

INFORMATION DISCLOSURE STATEMENT BY APPLICANT

(**Not for submission under 37 CFR 1.99)**

Application Number	09810514
Filing Date	2001-03-15
First Named Inventor	David Chao
Art Unit	3627
Examiner Name	Andrew J. Rudy
Attorney Docket Number	T00071

CERTIFICATION STATEMENT

Please see 37 CFR 1.97 and 1.98 to make the appropriate selection(s):

☐ That each item of information contained in the information disclosure statement was first cited in any communication from a foreign patent office in a counterpart foreign application not more than three months prior to the filing of the information disclosure statement. See 37 CFR 1.97(e)(1).

OR

☐ That no item of information contained in the information disclosure statement was cited in a communication from a foreign patent office in a counterpart foreign application, and, to the knowledge of the person signing the certification after making reasonable inquiry, no item of information contained in the information disclosure statement was known to any individual designated in 37 CFR 1.56(c) more than three months prior to the filing of the information disclosure statement. See 37 CFR 1.97(e)(2).

☐ See attached certification statement.

☒ Fee set forth in 37 CFR 1.17 (p) has been submitted herewith.

☐ None

SIGNATURE

A signature of the applicant or representative is required in accordance with CFR 1.33, 10.18. Please see CFR 1.4(d) for the form of the signature.

Signature	/Kent B. Chambers/	Date (YYYY-MM-DD)	2008-11-13
Name/Print	Kent B. Chambers	Registration Number	38,839

This collection of information is required by 37 CFR 1.97 and 1.98. The information is required to obtain or retain a benefit by the public which is to file (and by the USPTO to process) an application. Confidentiality is governed by 35 U.S.C. 122 and 37 CFR 1.14. This collection is estimated to take 1 hour to complete, including gathering, preparing and submitting the completed application form to the USPTO. Time will vary depending upon the individual case. Any comments on the amount of time you require to complete this form and/or suggestions for reducing this burden, should be sent to the Chief Information Officer, U.S. Patent and Trademark Office, U.S. Department of Commerce, P.O. Box 1450, Alexandria, VA 22313-1450. DO NOT SEND FEES OR COMPLETED FORMS TO THIS ADDRESS. **SEND TO: Commissioner for Patents, P.O. Box 1450, Alexandria, VA 22313-1450.**

Electronic Patent Application Fee Transmittal

Application Number:	09810514
Filing Date:	15-Mar-2001
Title of Invention:	Method and system for managing distributor information
First Named Inventor/Applicant Name:	David Chao
Filer:	Kent Bryan Chambers/Terri Munoz
Attorney Docket Number:	T00071

Filed as Large Entity

Utility under 35 USC 111(a) Filing Fees

Description	Fee Code	Quantity	Amount	Sub-Total in USD($)
Basic Filing:				
Pages:				
Claims:				
Miscellaneous-Filing:				
Petition:				
Patent-Appeals-and-Interference:				
Post-Allowance-and-Post-Issuance:				
Extension-of-Time:				

Description	Fee Code	Quantity	Amount	Sub-Total in USD($)
Miscellaneous:				
Submission- Information Disclosure Stmt	1806	1	180	180
		Total in USD ($)		**180**

Electronic Acknowledgement Receipt

EFS ID:	4282872
Application Number:	09810514
International Application Number:	
Confirmation Number:	6193
Title of Invention:	Method and system for managing distributor information
First Named Inventor/Applicant Name:	David Chao
Customer Number:	33438
Filer:	Kent Bryan Chambers/Terri Munoz
Filer Authorized By:	Kent Bryan Chambers
Attorney Docket Number:	T00071
Receipt Date:	13-NOV-2008
Filing Date:	15-MAR-2001
Time Stamp:	13:48:41
Application Type:	Utility under 35 USC 111(a)

Payment information:

Submitted with Payment	yes
Payment Type	Credit Card
Payment was successfully received in RAM	$180
RAM confirmation Number	8310
Deposit Account	
Authorized User	

File Listing:

Document Number	Document Description	File Name	File Size(Bytes)/ Message Digest	Multi Part /.zip	Pages (if appl.)
		Ex. 1002 406 397			

1	Information Disclosure Statement (IDS) Filed (SB/08)	T00071_IDS.pdf	32832 181683eae9941df166fcd783161cbc53b4f811b6	no	3
Warnings:					
Information:					
This is not an USPTO supplied IDS fillable form					
2	Fee Worksheet (PTO-06)	fee-info.pdf	29800 79dcd71eb2b5b23f20a2bbd03bf27062c638a8dc	no	2
Warnings:					
Information:					
		Total Files Size (in bytes):	62632		

This Acknowledgement Receipt evidences receipt on the noted date by the USPTO of the indicated documents, characterized by the applicant, and including page counts, where applicable. It serves as evidence of receipt similar to a Post Card, as described in MPEP 503.

New Applications Under 35 U.S.C. 111

If a new application is being filed and the application includes the necessary components for a filing date (see 37 CFR 1.53(b)-(d) and MPEP 506), a Filing Receipt (37 CFR 1.54) will be issued in due course and the date shown on this Acknowledgement Receipt will establish the filing date of the application.

National Stage of an International Application under 35 U.S.C. 371

If a timely submission to enter the national stage of an international application is compliant with the conditions of 35 U.S.C. 371 and other applicable requirements a Form PCT/DO/EO/903 indicating acceptance of the application as a national stage submission under 35 U.S.C. 371 will be issued in addition to the Filing Receipt, in due course.

New International Application Filed with the USPTO as a Receiving Office

If a new international application is being filed and the international application includes the necessary components for an international filing date (see PCT Article 11 and MPEP 1810), a Notification of the International Application Number and of the International Filing Date (Form PCT/RO/105) will be issued in due course, subject to prescriptions concerning national security, and the date shown on this Acknowledgement Receipt will establish the international filing date of the application.

IN THE UNITED STATES PATENT AND TRADEMARK OFFICE

Applicants:	David Chao, Brian Blount, Charles Erickson, Shari Gharavy, Cheng Zhou, Joshua Toub		
Assignee:	Versata Development Group, Inc.		
Title:	METHOD AND SYSTEM FOR MANAGING DISTRIBUTOR INFORMATION		
Serial No.:	09/810,514	Filing Date:	March 15, 2001
Examiner:	Andrew J. Rudy	Group Art Unit:	3687
Docket No.:	T00071	Customer No.:	33438

Austin, Texas
January 6, 2009

FILED ELECTRONICALLY

RESPONSE TO FINAL OFFICE ACTION

Dear Sir:

This paper is responsive to the Office Action dated October 6, 2008, having a shortened statutory period expiring on January 6, 2009. Further examination and reconsideration are respectfully requested in view of the amendments and remarks set forth below.

Ex. 1002 408/597

AMENDMENTS TO THE CLAIMS

1. (Previously Presented) A system for managing relationships between a first party and a second party comprising:

at least one processor;

memory coupled to said at least one processor;

said memory comprising a plurality of modules configured to manage distributor information;

said plurality of modules comprising a selling agreements module configured to generate a selling agreement;

said plurality of modules comprising a commission module configured to determine commission amounts associated with a sales transaction based on said selling agreement;

said plurality of modules comprising a licensing module configured to determine if a party associated with said sales transaction has a valid license to sell products associated with the sales transaction; and

said plurality of modules comprising a payment module for determining payment associated with said sales transaction to said party in accordance with (i) a determination of said commission amounts determined by said commission module and (ii) a determination by said licensing module of whether said party has a valid license to sell the products associated with said sales transaction.

2. (Original) The system of claim 2 wherein said licensing module is further configured to determine if a party associated with said sales transaction comprises a valid appointment.

3. (Original) The system of claim 1 wherein said plurality of modules further comprises a distributor administration module configured to manage information associated with a plurality of distributors.

4. (Original) The system of claim 1 wherein said selling agreement comprises compensation components.

5. (Original) The system of claim 4 wherein said selling agreement comprises document components.

6. (Original) The system of claim 5 wherein said selling agreements module configured to generate said selling agreement utilizes a configuration engine to determine which of said compensation components and said document components to include.

7. (Original) The method of claim 6 wherein said commission module accesses a commission engine to determine said commission amounts.

8. (Original) The system of claim 1 wherein said selling agreement comprises a binding contract between an institution having at least one product and a distributor.

9. (Original) The system of claim 8 wherein said institution comprises financial institution.

10. (Original) The system of claim 8 wherein said product comprise financial product.

11. (Original) The system of claim 10 wherein said financial product comprises life insurance.

12. (Currently Amended) A system for managing relationships between ~~a first party and a second party~~ parties to a selling agreement, the system comprising:

a database source comprising a plurality of data objects representative of at least one distributing party, at least one selling agreement, and at least one license or appointment associated with said at least one distributing party; and

a distributor management engine configured to obtain at least one of said plurality of data objects from said database source and determine whether said at least one distributing party conforms with said at least one selling agreement and said at least one license or appointment is valid to allow the at least one distributing party to sell one or more products of the first party in accordance with the selling agreement.

13. (Original) The system of claim 12 further comprising:

a backbone coupled to said distributor management engine, said backbone configured to transport said at least one of said plurality of data objects.

14. (Original) The system of claim 12 further comprising:
an interface for obtaining a plurality of business rules defining relationships between an institution and said at least one distributing party.

15. (Original) The system of claim 13 further comprising:
a commission engine configured to utilize said backbone to fetch said at least one selling agreement from said database source.

16. (Original) The system of claim 15 wherein said commission engine generates commission schemes utilized to model a set of selling agreement objects.

17. (Original) The system of claim 16 wherein said distributor management engine generates payments based on said selling agreement objects.

18. (Original) The system of claim 12 further comprising:
a workflow process engine configured to process workflow events.

19. (Original) The system of claim 18 wherein said workflow process events are determined by business rules defined by a user.

20. (Original) The system of claim 19 further comprising:
a commerce configuration engine configured to provide a configuration engine access to said business rules.

21. (Original) The system of claim 12 further comprising:
a report engine configured to generate a plurality of reports associated with said at least one distributing party.

22. (Original) The system of claim 21 wherein said report engine utilizes report templates to generate said plurality of reports.

23. (Original) The system of claim 12 further comprising:

a distributor administration module for managing said plurality of data objects.

24. (Currently Amended) The system of claim 12 further comprising:

a licensing and appointment module configured to enable ~~an institution~~ the first party to manage said at least one license or appointments data object for at least one said distributor.

25. (Original) The system of claim 24 wherein said licensing and appointment module is configured to validate license or appointment compliance with a set of industry regulations by evaluating said at least one license or appointment data object.

26. (Original) The system of claim 12 further comprising:

a selling agreements module configured to enable said institution to define and create a business contract with said at least one distributing party.

27. (Original) The system of claim 26 wherein said selling agreements module manages a set of business rules governing how contract components are combined into said at least one selling agreement associated with each of said at least one distributing party.

28. (Original) The system of claim 27 further comprising:

a debt management module configured to enable said institution to manage distributor advances and repayments.

29. (Original) The system of claim 28 wherein said debt management module is utilized to define and manage a set of payment rules defining parameters for paying said at least one distributing party.

30. (Original) The system of claim 12 further comprising:

a net pay module enabling said institution to track and calculate payments to distributors.

31. (Original) The system of claim 12 wherein said institution comprises a financial services institution.

32. (Currently Amended) A system for managing relationships between a first party and a second party comprising:

an interface for obtaining a plurality of business rules defining relationships between ~~an institution~~ a product provider and at least one distributor;

a database source comprising a plurality of data objects representative of said at least one distributor, at least one selling agreement and at least one license or appointment associated with said at least one distributor;

a commission engine configured to determine a commission amount associated with said at least one distributor by evaluating said at least one selling agreement data object;

~~a backbone coupled to said distributor management engine, said backbone configured to transport said at least one of said plurality of data objects to a plurality of modules;~~

[[said]] a plurality of modules comprising, a distributor administration module for managing said plurality of data objects;

said plurality of modules comprising, a licensing and appointment module configured to determine if said at least one license or appointment data object associated with said at least one distributor is in compliance with a set of industry regulations;

said plurality of modules comprising, a selling agreements module configured to enable said ~~institution~~ product provider to define and create a selling agreement with said at least one distributor; and

said plurality of modules comprising, a payment module configured to determine said commission amount to said at least one distributor.

33. (Original) The system of claim 32 wherein said commission engine utilizes said backbone to fetch said at least one selling agreement from said database source.

34. (Original) The system of claim 32 further comprising:

a workflow process engine configured to process workflow events, said workflow process events determined by said business rules.

35. (Original) The system of claim 32 further comprising:

a commerce configuration engine configured to provide access to said business rules.

36. (Original) The system of claim 32 further comprising:

a report engine configured to generate a plurality of reports associated with said at least one distributor.

37. (Original) The system of claim 36 wherein said report engine utilizes report templates to generate said plurality of reports.

38. (Currently Amended) The system of claim 32 wherein said selling agreement comprises a contract between said ~~institution~~ product provider and said at least one distributor.

39. (Original) The system of claim 38 wherein said selling agreements module manages a set of business rules governing how contract components are combined into said at least one selling agreement associated with each of said at least one distributors.

40. (Currently Amended) The system of claim 32 further comprising:

a debt management module configured to enable said ~~institution~~ product provider to manage distributor advances and repayments.

41. (Original) The system of claim 28 wherein said debt management module is utilized to define and manage a set of payment rules defining parameters for paying said at least one distributor.

42. (Currently Amended) The system of claim 12 wherein said ~~institution~~ first party comprises a financial services institution.

43-64. (Canceled).

65. (New) The system of claim 12 further comprising a payment module for determining payment to said at least one distributing party in association with a sales of the one or more products in accordance with (i) a determination of commission amounts in accordance with the at least one selling agreement and (ii) a determination of whether said at least one distributing party has a valid license to sell the one or more products associated with said sales transaction.

66. (New) The system of claim 32 further comprising a backbone coupled to said distributor management engine to transport said at least one of said plurality of data objects to the plurality of modules.

66. (New) The system of claim 32 wherein the payment module is further configured to determine payment to said at least one distributor in association with a sales of one or more products of said product provider in accordance with (i) a determination of commission amounts in accordance with the at least one selling agreement and (ii) a determination of whether said at least one distributor has a valid license to sell the one or more products associated with said sales transaction.

67. (New) The system of claim 32 wherein said product provider comprises a financial services institution.

REMARKS

Claims 1-42 are pending.

Claims 1-42 stand rejected.

Claims 43-64 have been cancelled without prejudice or disclaimer of the subject matter recited therein.

Claims 65-67 have been added.

Claims 12, 24, 32, 38, 40, and 42 have been amended for reasons other than patentability. Claim 12 has been amended for clarity. Claim 24 has been amended to substitute "product provider" for "institution". Claim 32 has been amended to delete an element and to substitute "product provider" for "institution". Claims 38, 40, and 42 have been amended to conform to amended claim 32.

Claim Rejections - 35 U.S.C. § 103

Claims 1-42 stand rejected under 35 U.S.C. § 103(a) as being unpatentable over U.S. Patent No. 6,782,369 to Carrott (hereinafter "*Carrott*") in view of U.S. Publication No. 20010032094 to Ghosh (hereinafter "*Ghosh*"). Applicants respectfully traverse the rejection.

For at least the reasons submitted below, Applicants respectfully submit that claims 1-42 and new claims 65-67 are allowable over *Carrott* in view of *Ghosh*.

Carrott teaches a "computer system and method of allocating commissions for sales made over the Internet and for dividing an otherwise indivisible Internet into defined geographic areas." *Carrott*, Abstract. The computers system and method of *Carrott* more specifically teach "recording sales to exclusive geographic distribution/representation areas placed through an Internet web site", "determining a value of [the] sales to each of [the] geographic distribution/representation areas", and "allocating commissions based solely on [the] value of [the] sales delivered to each of [the] geographic distribution/representation areas." *Id.*, claim 1.

Ghosh teaches "providing a centralized updated and current database that tracks all relevant information related to licensing of agents and agencies." *Ghosh*, para. 0013. "The present

invention further provides agents with information relative to their license status, and requirements for maintaining their certification." *Id.* *Ghosh* teaches a system that "provides a licensing information system that can be used for tracking and maintaining all relevant information regarding a particular individual and their licensing status in addition to relevant information regarding different commercial insurance organizations." *Id.*, para. 0014. *Ghosh* also teaches that the system "has unique and extensive reporting capabilities that facilitate a display of information in a user friendly manner" such as "for state reporting requirements." *Id.*, paras. 0016 and 0049.

Assuming, without admitting, that the combination of *Carrott* and *Ghosh* is appropriate, Applicants respectfully submit that the combination of *Carrott* and *Ghosh* fail to teach or suggest the present invention and fail to achieve the purpose of the present invention.

Claim 1.

The combination of *Carrott* and *Ghosh* results in a system and method that provides commissions to a distributor, store and retrieves licensing information about the distributor, and generates reports regarding, for example, "state licensing requirements". *Ghosh*, para. 0050. However, simply tracking a sale to a distributor and managing the distributor's licensing information as taught by the combination of *Carrott* and *Ghosh* does not in and of itself determine whether or not a distributor has a valid license "to sell products associated with [a] sales transaction" to obtain a commission for the sales transaction. Claim 1. The combination of *Carrott* and *Ghosh* still suffers from deficiencies identified in the Background of the Present Application.

Thus, contrary to the combination of *Carrott* and *Ghosh*, to determine whether a distributor has a valid licnese, in addition to merely obtaining licensing information, the system must also determine, for example, "if a party associated with said sales transaction has a valid license to sell products associated with the sales transaction**."** *Carrott* in combination with *Ghosh* ("*Carrott/Ghosh combination*") fail to teach or suggest how to apply the licensing information to a distributor. In contrast to the *Carrott/Ghosh combination*, Claim 1 recites "a licensing module **configured to determine if a party associated with said sales transaction has a valid license to sell products** associated with the sales transaction" and "a payment module **for determining payment associated with said sales transaction to said party in accordance** with (i) a determination of said commission amounts determined by said commission module and (ii) **a**

determination by said licensing module of whether said party has a valid license to sell the products associated with said sales transaction."

Thus, the combination of *Carrott* and *Ghosh* is missing elements of Claim 1.

In summary, Applicants respectfully submit that *Carrott* in combination with *Ghosh* only relevantly teach determining commissions for distributors on a geographic basis and obtaining licensing information. Since, (1) the *Carrott/Ghosh combination* fails to teach or suggest "a licensing module configured to determine if a party associated with said sales transaction has a valid license to sell products associated with the sales transaction", (2) fail to teach "a payment module for determining payment associated with said sales transaction to said party in accordance with (i) a determination of said commission amounts determined by said commission module and (ii) a determination by said licensing module of whether said party has a valid license to sell the products associated with said sales transaction", and (3) use of hindsight in view of the present application is impermissible, the present invention of Claim 1 is allowable over the *Carrott/Ghosh combination*.

Claim 12.

Applicants also respectfully submit that independent Claim 12 is allowable. Applicants respectfully submit that the **Office Action provides no support for rejecting Claim 12.**

Applicants respectfully submit that the *Carrott/Ghosh combination* teaches determining commissions for distributors on a geographic basis and obtaining licensing information. However, Applicants respectfully submit that the *Carrott/Ghosh combination* neither teaches nor suggests "a distributor management engine configured to obtain at least one of said plurality of data objects from said database source and **determine whether said at least one distributing party conforms with said at least one selling agreement and said at least one license or appointment is valid** to allow the at least one distributing party to sell one or more products of the first party in accordance with the selling agreement." Applicants respectfully request the Examiner to provide specific references in *Carrott* or *Ghosh* that teach or suggest the invention embodiment of Claim 12 or withdraw the rejection.

Claim 32.

Applicants also respectfully submit that independent Claim 32 is allowable. Applicants respectfully submit that the **Office Action provides no support for rejecting Claim 32.**

Applicants respectfully submit that the *Carrott/Ghosh combination* teaches determining commissions for distributors on a geographic basis and obtaining licensing information. However, Applicants respectfully submit that the *Carrott/Ghosh combination* neither teaches nor suggests "a licensing and appointment module **configured to determine if said at least one license or appointment data object associated with said at least one distributor is in compliance with a set of industry regulations**." Applicants respectfully request the Examiner to provide specific references in *Carrott* or *Ghosh* that teach or suggest the invention embodiment of Claim 32 or withdraw the rejection.

For at least the foregoing reasons, Applicants respectfully request withdrawal of the rejection of claims 1, 12, and 32 and claims directly or indirectly dependent therefrom.

CONCLUSION

In view of the amendments and remarks set forth herein, the application is believed to be in condition for allowance and a notice to that effect is solicited. Nonetheless, should any issues remain that might be subject to resolution through a telephonic interview, the examiner is requested to telephone the undersigned at 512-338-9100.

CERTIFICATE OF TRANSMISSION

I hereby certify that on January 6, 2009 this correspondence is being transmitted via the U.S. Patent & Trademark Office's electronic filing system.

/Kent B. Chambers/

Respectfully submitted,

/Kent B. Chambers/

Kent B. Chambers
Attorney for Applicant(s)
Reg. No. 38,839

Ex. 1002 419/597

Electronic Acknowledgement Receipt

EFS ID:	4565914
Application Number:	09810514
International Application Number:	
Confirmation Number:	6193
Title of Invention:	Method and system for managing distributor information
First Named Inventor/Applicant Name:	David Chao
Customer Number:	33438
Filer:	Kent Bryan Chambers
Filer Authorized By:	
Attorney Docket Number:	T00071
Receipt Date:	06-JAN-2009
Filing Date:	15-MAR-2001
Time Stamp:	19:15:40
Application Type:	Utility under 35 USC 111(a)

Payment information:

Submitted with Payment	no

File Listing:

Document Number	Document Description	File Name	File Size(Bytes)/ Message Digest	Multi Part /.zip	Pages (if appl.)
1	Amendment After Final	T00071_RFOA_10_6_08.pdf	136979 d57f6d254cb04398217e65ae5e7e6cd6214b2029	no	12

Warnings:	
Information:	Ex. 1002 420/597

Total Files Size (in bytes):	136979

This Acknowledgement Receipt evidences receipt on the noted date by the USPTO of the indicated documents, characterized by the applicant, and including page counts, where applicable. It serves as evidence of receipt similar to a Post Card, as described in MPEP 503.

New Applications Under 35 U.S.C. 111

If a new application is being filed and the application includes the necessary components for a filing date (see 37 CFR 1.53(b)-(d) and MPEP 506), a Filing Receipt (37 CFR 1.54) will be issued in due course and the date shown on this Acknowledgement Receipt will establish the filing date of the application.

National Stage of an International Application under 35 U.S.C. 371

If a timely submission to enter the national stage of an international application is compliant with the conditions of 35 U.S.C. 371 and other applicable requirements a Form PCT/DO/EO/903 indicating acceptance of the application as a national stage submission under 35 U.S.C. 371 will be issued in addition to the Filing Receipt, in due course.

New International Application Filed with the USPTO as a Receiving Office

If a new international application is being filed and the international application includes the necessary components for an international filing date (see PCT Article 11 and MPEP 1810), a Notification of the International Application Number and of the International Filing Date (Form PCT/RO/105) will be issued in due course, subject to prescriptions concerning national security, and the date shown on this Acknowledgement Receipt will establish the international filing date of the application.

PTO/SB/06 (07-06)
Approved for use through 1/31/2007. OMB 0651-0032
U.S. Patent and Trademark Office; U.S. DEPARTMENT OF COMMERCE
Under the Paperwork Reduction Act of 1995, no persons are required to respond to a collection of information unless it displays a valid OMB control number.

PATENT APPLICATION FEE DETERMINATION RECORD Substitute for Form PTO-875	Application or Docket Number 09/810,514	Filing Date 03/15/2001	☐ To be Mailed

APPLICATION AS FILED – PART I

	(Column 1)	(Column 2)	SMALL ENTITY ☐		OR	OTHER THAN SMALL ENTITY	
FOR	NUMBER FILED	NUMBER EXTRA	RATE ($)	FEE ($)		RATE ($)	FEE ($)
☐ BASIC FEE (37 CFR 1.16(a), (b), or (c))	N/A	N/A	N/A			N/A	
☐ SEARCH FEE (37 CFR 1.16(k), (i), or (m))	N/A	N/A	N/A			N/A	
☐ EXAMINATION FEE (37 CFR 1.16(o), (p), or (q))	N/A	N/A	N/A			N/A	
TOTAL CLAIMS (37 CFR 1.16(i))	minus 20 =	*	X $ =		OR	X $ =	
INDEPENDENT CLAIMS (37 CFR 1.16(h))	minus 3 =	*	X $ =			X $ =	
☐ APPLICATION SIZE FEE (37 CFR 1.16(s))	If the specification and drawings exceed 100 sheets of paper, the application size fee due is $250 ($125 for small entity) for each additional 50 sheets or fraction thereof. See 35 U.S.C. 41(a)(1)(G) and 37 CFR 1.16(s).						
☐ MULTIPLE DEPENDENT CLAIM PRESENT (37 CFR 1.16(j))							
* If the difference in column 1 is less than zero, enter "0" in column 2.			TOTAL			TOTAL	

APPLICATION AS AMENDED – PART II

AMENDMENT	01/06/2009	(Column 1) CLAIMS REMAINING AFTER AMENDMENT		(Column 2) HIGHEST NUMBER PREVIOUSLY PAID FOR	(Column 3) PRESENT EXTRA	SMALL ENTITY RATE ($)	ADDITIONAL FEE ($)	OR	OTHER THAN SMALL ENTITY RATE ($)	ADDITIONAL FEE ($)
	Total (37 CFR 1.16(i))	* 46	Minus	** 64	= 0	X $ =		OR	X $52=	0
	Independent (37 CFR 1.16(h))	* 3	Minus	***5	= 0	X $ =		OR	X $220=	0
	☐ Application Size Fee (37 CFR 1.16(s))									
	☐ FIRST PRESENTATION OF MULTIPLE DEPENDENT CLAIM (37 CFR 1.16(j))							OR		
						TOTAL ADD'L FEE		OR	TOTAL ADD'L FEE	0

AMENDMENT		(Column 1) CLAIMS REMAINING AFTER AMENDMENT		(Column 2) HIGHEST NUMBER PREVIOUSLY PAID FOR	(Column 3) PRESENT EXTRA	RATE ($)	ADDITIONAL FEE ($)		RATE ($)	ADDITIONAL FEE ($)
	Total (37 CFR 1.16(i))	*	Minus	**	=	X $ =		OR	X $ =	
	Independent (37 CFR 1.16(h))	*	Minus	***	=	X $ =		OR	X $ =	
	☐ Application Size Fee (37 CFR 1.16(s))									
	☐ FIRST PRESENTATION OF MULTIPLE DEPENDENT CLAIM (37 CFR 1.16(j))							OR		
						TOTAL ADD'L FEE		OR	TOTAL ADD'L FEE	

* If the entry in column 1 is less than the entry in column 2, write "0" in column 3.

** If the "Highest Number Previously Paid For" IN THIS SPACE is less than 20, enter "20".

*** If the "Highest Number Previously Paid For" IN THIS SPACE is less than 3, enter "3".

The "Highest Number Previously Paid For" (Total or Independent) is the highest number found in the appropriate box in column 1.

Legal Instrument Examiner:
/WANDA ANTHONY/

This collection of information is required by 37 CFR 1.16. The information is required to obtain or retain a benefit by the public which is to file (and by the USPTO to process) an application. Confidentiality is governed by 35 U.S.C. 122 and 37 CFR 1.14. This collection is estimated to take 12 minutes to complete, including gathering, preparing, and submitting the completed application form to the USPTO. Time will vary depending upon the individual case. Any comments on the amount of time you require to complete this form and/or suggestions for reducing this burden, should be sent to the Chief Information Officer, U.S. Patent and Trademark Office, U.S. Department of Commerce, P.O. Box 1450, Alexandria, VA 22313-1450. DO NOT SEND FEES OR COMPLETED FORMS TO THIS ADDRESS. **SEND TO: Commissioner for Patents, P.O. Box 1450, Alexandria, VA 22313-1450.**

If you need assistance in completing the form, call 1-800-PTO-9199 and select option 2.

UNITED STATES PATENT AND TRADEMARK OFFICE

UNITED STATES DEPARTMENT OF COMMERCE
United States Patent and Trademark Office
Address: COMMISSIONER FOR PATENTS
P.O. Box 1450
Alexandria, Virginia 22313-1450
www.uspto.gov

APPLICATION NO.	FILING DATE	FIRST NAMED INVENTOR	ATTORNEY DOCKET NO.	CONFIRMATION NO.
09/810,514	03/15/2001	David Chao	T00071	6193

33438 7590 01/23/2009
HAMILTON & TERRILE, LLP
P.O. BOX 203518
AUSTIN, TX 78720

EXAMINER	
RUDY, ANDREW J	

ART UNIT	PAPER NUMBER
3687	

NOTIFICATION DATE	DELIVERY MODE
01/23/2009	ELECTRONIC

Please find below and/or attached an Office communication concerning this application or proceeding.

The time period for reply, if any, is set in the attached communication.

Notice of the Office communication was sent electronically on above-indicated "Notification Date" to the following e-mail address(es):

tmunoz@hamiltonterrile.com

Advisory Action Before the Filing of an Appeal Brief	**Application No.** 09/810,514	**Applicant(s)** CHAO ET AL.	
	Examiner Andrew Joseph Rudy	**Art Unit** 3687	

--The MAILING DATE of this communication appears on the cover sheet with the correspondence address --

THE REPLY FILED 06 January 2009 FAILS TO PLACE THIS APPLICATION IN CONDITION FOR ALLOWANCE.

1. ☒ The reply was filed after a final rejection, but prior to or on the same day as filing a Notice of Appeal. To avoid abandonment of this application, applicant must timely file one of the following replies: (1) an amendment, affidavit, or other evidence, which places the application in condition for allowance; (2) a Notice of Appeal (with appeal fee) in compliance with 37 CFR 41.31; or (3) a Request for Continued Examination (RCE) in compliance with 37 CFR 1.114. The reply must be filed within one of the following time periods:
   a) ☒ The period for reply expires *3* months from the mailing date of the final rejection.
   b) ☐ The period for reply expires on: (1) the mailing date of this Advisory Action, or (2) the date set forth in the final rejection, whichever is later. In no event, however, will the statutory period for reply expire later than SIX MONTHS from the mailing date of the final rejection.

   Examiner Note: If box 1 is checked, check either box (a) or (b). ONLY CHECK BOX (b) WHEN THE FIRST REPLY WAS FILED WITHIN TWO MONTHS OF THE FINAL REJECTION. See MPEP 706.07(f).

Extensions of time may be obtained under 37 CFR 1.136(a). The date on which the petition under 37 CFR 1.136(a) and the appropriate extension fee have been filed is the date for purposes of determining the period of extension and the corresponding amount of the fee. The appropriate extension fee under 37 CFR 1.17(a) is calculated from: (1) the expiration date of the shortened statutory period for reply originally set in the final Office action; or (2) as set forth in (b) above, if checked. Any reply received by the Office later than three months after the mailing date of the final rejection, even if timely filed, may reduce any earned patent term adjustment. See 37 CFR 1.704(b).

NOTICE OF APPEAL

2. ☐ The Notice of Appeal was filed on _____. A brief in compliance with 37 CFR 41.37 must be filed within two months of the date of filing the Notice of Appeal (37 CFR 41.37(a)), or any extension thereof (37 CFR 41.37(e)), to avoid dismissal of the appeal. Since a Notice of Appeal has been filed, any reply must be filed within the time period set forth in 37 CFR 41.37(a).

AMENDMENTS

3. ☒ The proposed amendment(s) filed after a final rejection, but prior to the date of filing a brief, will not be entered because
   (a) ☒ They raise new issues that would require further consideration and/or search (see NOTE below);
   (b) ☐ They raise the issue of new matter (see NOTE below);
   (c) ☐ They are not deemed to place the application in better form for appeal by materially reducing or simplifying the issues for appeal; and/or
   (d) ☐ They present additional claims without canceling a corresponding number of finally rejected claims.

   NOTE: *See Continuation Sheet*. (See 37 CFR 1.116 and 41.33(a)).

4. ☐ The amendments are not in compliance with 37 CFR 1.121. See attached Notice of Non-Compliant Amendment (PTOL-324).
5. ☐ Applicant's reply has overcome the following rejection(s): _____.
6. ☐ Newly proposed or amended claim(s) _____ would be allowable if submitted in a separate, timely filed amendment canceling the non-allowable claim(s).
7. ☐ For purposes of appeal, the proposed amendment(s): a) ☐ will not be entered, or b) ☐ will be entered and an explanation of how the new or amended claims would be rejected is provided below or appended.
   The status of the claim(s) is (or will be) as follows:
   Claim(s) allowed: _____.
   Claim(s) objected to: _____.
   Claim(s) rejected: _____.
   Claim(s) withdrawn from consideration: _____.

AFFIDAVIT OR OTHER EVIDENCE

8. ☐ The affidavit or other evidence filed after a final action, but before or on the date of filing a Notice of Appeal will not be entered because applicant failed to provide a showing of good and sufficient reasons why the affidavit or other evidence is necessary and was not earlier presented. See 37 CFR 1.116(e).
9. ☐ The affidavit or other evidence filed after the date of filing a Notice of Appeal, but prior to the date of filing a brief, will not be entered because the affidavit or other evidence failed to overcome all rejections under appeal and/or appellant fails to provide a showing a good and sufficient reasons why it is necessary and was not earlier presented. See 37 CFR 41.33(d)(1).
10. ☐ The affidavit or other evidence is entered. An explanation of the status of the claims after entry is below or attached.

REQUEST FOR RECONSIDERATION/OTHER

11. ☐ The request for reconsideration has been considered but does NOT place the application in condition for allowance because: _____.
12. ☐ Note the attached Information *Disclosure Statement*(s). (PTO/SB/08) Paper No(s). _____
13. ☐ Other: _____.

/Andrew Joseph Rudy/
Primary Examiner, Art Unit 3687

Continuation of 3. NOTE: Claim language is altered. Also, two new claims "66" presented.

IN THE UNITED STATES PATENT AND TRADEMARK OFFICE

Applicants:	David Chao, Brian Blount, Charles Erickson, Shari Gharavy, Cheng Zhou, Joshua Toub		
Assignee:	Versata Development Group, Inc.		
Title:	METHOD AND SYSTEM FOR MANAGING DISTRIBUTOR INFORMATION		
Serial No.:	09/810,514	Filing Date:	March 15, 2001
Examiner:	Andrew J. Rudy	Group Art Unit:	3687
Docket No.:	T00071	Customer No.:	33438

January 26, 2009

FILED ELECTRONICALLY

INFORMATION DISCLOSURE STATEMENT

Sir:

Pursuant to 37 C.F.R. § 1.56, § 1.97 and § 1.98, Applicants wish to call the following information and corresponding documents to the attention of the Examiner.

Applicant specifically calls the Examiner's attention to U.S. Patent Application No. 09/896,144. The present application and U.S. Patent Application No. may be considered to have similar subject matter. All documents related to U.S. Patent Application No. 09/896,144 are available in the U.S.P.T.O.'s Patent Application Information Retrieval (PAIR) system. Applicants have not sent the physical documents from U.S. Patent Application No. 09/896,144 since the documents are available in the PAIR system.

Citation of the above information and corresponding documents shall not be construed as:

1. an admission that the information and corresponding documents are necessarily prior art with respect to the instant invention;
2. a representation that a search has been made, other than as described above; or
3. an admission that the information and corresponding documents cited herein is, or is considered to be, material to patentability as defined in § 1.56(b).

The Information Disclosure Statement is being submitted via the USPTO EFS. The Commissioner is hereby authorized to charge any fees which may be required, or credit any overpayment to Deposit Account 502264.

CERTIFICATE OF TRANSMISSION

I hereby certify that on January 26, 2009 this correspondence is being transmitted via the U.S. Patent & Trademark Office's electronic filing system.

/Kent B. Chambers/

Respectfully submitted,

/Kent B. Chambers/

Kent B. Chambers
Attorney for Applicant(s)
Reg. No. 38,839

U.S. Department of Commerce, Patent and Trademark Office	Attorney Docket No.	Serial No.
	T00071	09/810,514
INFORMATION DISCLOSURE STATEMENT BY APPLICANT	Applicant(s)	
(Use several sheets if necessary)	David Chao et al.	
	Filing Date	Group
	March 15, 2001	3687

U.S. Patent Documents

*Examiner Initial		Document Number	Date	Name	Class	Subclass	Filing Date If Appropriate
	AA						
	AB						
	AC						
	AD						
	AE						
	AF						
	AG						
	AH						
	AI						
	AJ						
	AK						
	AL						
	AM						

Foreign Patent Documents

							Translation	
		Document	Date	Country	Class	Subclass	Yes	No
	An						☐	☐
	AO						☐	☐
	AP						☐	☐
	AQ							
	AR							

OTHER ART (Including Author, Title, Date, Pertinent Pages, Etc.)

	AS	Documents for U.S. Patent Application No. 09/896,144 in the U.S.P.T.O.'s Patent Application Information Retrieval (PAIR) system.
	AT	

Examiner	Date Considered

*EXAMINER: Initial if reference considered, whether or not citation is in conformance with MPEP 609; Draw line through citation if not in conformance and not considered. Include copy of this form with your communication to applicant.

Electronic Acknowledgement Receipt

EFS ID:	4674018
Application Number:	09810514
International Application Number:	
Confirmation Number:	6193
Title of Invention:	Method and system for managing distributor information
First Named Inventor/Applicant Name:	David Chao
Customer Number:	33438
Filer:	Kent Bryan Chambers/Terri Munoz
Filer Authorized By:	Kent Bryan Chambers
Attorney Docket Number:	T00071
Receipt Date:	26-JAN-2009
Filing Date:	15-MAR-2001
Time Stamp:	14:20:40
Application Type:	Utility under 35 USC 111(a)

Payment information:

Submitted with Payment	no

File Listing:

Document Number	Document Description	File Name	File Size(Bytes)/ Message Digest	Multi Part /.zip	Pages (if appl.)
1	Information Disclosure Statement (IDS) Filed (SB/08)	T00071_IDS_PAIR_T00068.pdf	96769 f62cb7dc0a85fc6607ceadae073312422d7f3642	no	2

Warnings:	
Information:	Ex. 1002 428/597

This is not an USPTO supplied IDS fillable form	
Total Files Size (in bytes):	96769

This Acknowledgement Receipt evidences receipt on the noted date by the USPTO of the indicated documents, characterized by the applicant, and including page counts, where applicable. It serves as evidence of receipt similar to a Post Card, as described in MPEP 503.

New Applications Under 35 U.S.C. 111

If a new application is being filed and the application includes the necessary components for a filing date (see 37 CFR 1.53(b)-(d) and MPEP 506), a Filing Receipt (37 CFR 1.54) will be issued in due course and the date shown on this Acknowledgement Receipt will establish the filing date of the application.

National Stage of an International Application under 35 U.S.C. 371

If a timely submission to enter the national stage of an international application is compliant with the conditions of 35 U.S.C. 371 and other applicable requirements a Form PCT/DO/EO/903 indicating acceptance of the application as a national stage submission under 35 U.S.C. 371 will be issued in addition to the Filing Receipt, in due course.

New International Application Filed with the USPTO as a Receiving Office

If a new international application is being filed and the international application includes the necessary components for an international filing date (see PCT Article 11 and MPEP 1810), a Notification of the International Application Number and of the International Filing Date (Form PCT/RO/105) will be issued in due course, subject to prescriptions concerning national security, and the date shown on this Acknowledgement Receipt will establish the international filing date of the application.

PTO/SB/30 (01-09)
Approved for use through 02/28/2009. OMB 0651-0031
U.S. Patent and Trademark Office; U.S. DEPARTMENT OF COMMERCE
Under the Paperwork Reduction Act of 1995, no persons are required to respond to a collection of information unless it contains a valid OMB control number.

Request for Continued Examination (RCE) Transmittal

Address to:
Mail Stop RCE
Commissioner for Patents
P.O. Box 1450
Alexandria, VA 22313-1450

Application Number	09/810,514
Filing Date	03/15/2001
First Named Inventor	David Chao
Art Unit	3687
Examiner Name	Rudy, Andrew J.
Attorney Docket Number	T00071

This is a Request for Continued Examination (RCE) under 37 CFR 1.114 of the above-identified application.
Request for Continued Examination (RCE) practice under 37 CFR 1.114 does not apply to any utility or plant application filed prior to June 8, 1995, or to any design application. See Instruction Sheet for RCEs (not to be submitted to the USPTO) on page 2.

1. Submission required under 37 CFR 1.114 Note: If the RCE is proper, any previously filed unentered amendments and amendments enclosed with the RCE will be entered in the order in which they were filed unless applicant instructs otherwise. If applicant does not wish to have any previously filed unentered amendment(s) entered, applicant must request non-entry of such amendment(s).

   a. ☐ Previously submitted. If a final Office action is outstanding, any amendments filed after the final Office action may be considered as a submission even if this box is not checked.

      i. ☐ Consider the arguments in the Appeal Brief or Reply Brief previously filed on _____

      ii. ☐ Other _____

   b. ☑ Enclosed

      i. ☑ Amendment/Reply

      ii. ☐ Affidavit(s)/ Declaration(s)

      iii. ☐ Information Disclosure Statement (IDS)

      iv. ☑ Other Petition for Extension of Time

2. Miscellaneous

   a. ☐ Suspension of action on the above-identified application is requested under 37 CFR 1.103(c) for a period of _____ months. (Period of suspension shall not exceed 3 months; Fee under 37 CFR 1.17(i) required)

   b. ☐ Other _____

3. Fees The RCE fee under 37 CFR 1.17(e) is required by 37 CFR 1.114 when the RCE is filed.

   a. ☑ The Director is hereby authorized to charge the following fees, any underpayment of fees, or credit any overpayments, to Deposit Account No. 502264.

      i. ☐ RCE fee required under 37 CFR 1.17(e)

      ii. ☐ Extension of time fee (37 CFR 1.136 and 1.17)

      iii. ☐ Other _____

   b. ☐ Check in the amount of $ _____ enclosed

   c. ☐ Payment by credit card (Form PTO-2038 enclosed)

WARNING: Information on this form may become public. Credit card information should not be included on this form. Provide credit card information and authorization on PTO-2038.

SIGNATURE OF APPLICANT, ATTORNEY, OR AGENT REQUIRED

Signature	/Kent B. Chambers/	Date	February 6, 2009
Name (Print/Type)	Kent B. Chambers	Registration No.	38,839

CERTIFICATE OF MAILING OR TRANSMISSION

I hereby certify that this correspondence is being deposited with the United States Postal Service with sufficient postage as first class mail in an envelope addressed to: Mail Stop RCE, Commissioner for Patents, P. O. Box 1450, Alexandria, VA 22313-1450 or facsimile transmitted to the U.S. Patent and Trademark Office on the date shown below.

Signature			
Name (Print/Type)		Date	

This collection of information is required by 37 CFR 1.114. The information is required to obtain or retain a benefit by the public which is to file (and by the USPTO to process) an application. Confidentiality is governed by 35 U.S.C. 122 and 37 CFR 1.11 and 1.14. This collection is estimated to take 12 minutes to complete, including gathering, preparing, and submitting the completed application form to the USPTO. Time will vary depending upon the individual case. Any comments on the amount of time you require to complete this form and/or suggestions for reducing this burden, should be sent to the Chief Information Officer, U.S. Patent and Trademark Office, U.S. Department of Commerce, P.O. Box 1450, Alexandria, VA 22313-1450. DO NOT SEND FEES OR COMPLETED FORMS TO THIS ADDRESS. **SEND TO: Mail Stop RCE, Commissioner for Patents, P.O. Box 1450, Alexandria, VA 22313-1450.**
If you need assistance in completing the form, call 1-800-PTO-9199 and select option 2.

Electronic Patent Application Fee Transmittal

Application Number:	09810514
Filing Date:	15-Mar-2001
Title of Invention:	Method and system for managing distributor information
First Named Inventor/Applicant Name:	David Chao
Filer:	Kent Bryan Chambers
Attorney Docket Number:	T00071

Filed as Large Entity

Utility under 35 USC 111(a) Filing Fees

Description	Fee Code	Quantity	Amount	Sub-Total in USD($)
Basic Filing:				
Pages:				
Claims:				
Miscellaneous-Filing:				
Petition:				
Patent-Appeals-and-Interference:				
Post-Allowance-and-Post-Issuance:				
Extension-of-Time:				
Extension - 1 month with $0 paid	1251	1	130	130

Description	Fee Code	Quantity	Amount	Sub-Total in USD($)
Miscellaneous:				
			Total in USD ($)	**130**

Electronic Acknowledgement Receipt

EFS ID:	4749047
Application Number:	09810514
International Application Number:	
Confirmation Number:	6193
Title of Invention:	Method and system for managing distributor information
First Named Inventor/Applicant Name:	David Chao
Customer Number:	33438
Filer:	Kent Bryan Chambers
Filer Authorized By:	
Attorney Docket Number:	T00071
Receipt Date:	06-FEB-2009
Filing Date:	15-MAR-2001
Time Stamp:	14:32:21
Application Type:	Utility under 35 USC 111(a)

Payment information:

Submitted with Payment	yes
Payment Type	Credit Card
Payment was successfully received in RAM	$130
RAM confirmation Number	8856
Deposit Account	
Authorized User	

File Listing:

Document Number	Document Description	File Name	File Size(Bytes)/ Message Digest	Multi Part /.zip	Pages (if appl.)
		Ex. 1002 [illegible]			

1	Amendment Submitted/Entered with Filing of CPA/RCE	T00071_RCE_Submission_2_6_2009.pdf	136757 7961dc02960c7e1ff576ab8fa1221747ece2bdcd	no	12
Warnings:					
Information:					
2	Extension of Time	T00071_Extension_2_6_2009.pdf	80946 a5f52c41c1588853a5ec4f83272520a8a19a78a8	no	1
Warnings:					
Information:					
3	Request for Continued Examination (RCE)	T00071_RCE_Transmittal_2_6_2009.pdf	51422 a2ba5acbdddd381f3cd59816c8ce7bfa1e44257f	no	1
Warnings:					
This is not a USPTO supplied RCE SB30 form.					
Information:					
4	Fee Worksheet (PTO-06)	fee-info.pdf	29766 68d65e44772dfc2b2d8b4bdf0b41bbf7636cae3d	no	2
Warnings:					
Information:					
			Total Files Size (in bytes):	298891	

This Acknowledgement Receipt evidences receipt on the noted date by the USPTO of the indicated documents, characterized by the applicant, and including page counts, where applicable. It serves as evidence of receipt similar to a Post Card, as described in MPEP 503.

New Applications Under 35 U.S.C. 111

If a new application is being filed and the application includes the necessary components for a filing date (see 37 CFR 1.53(b)-(d) and MPEP 506), a Filing Receipt (37 CFR 1.54) will be issued in due course and the date shown on this Acknowledgement Receipt will establish the filing date of the application.

National Stage of an International Application under 35 U.S.C. 371

If a timely submission to enter the national stage of an international application is compliant with the conditions of 35 U.S.C. 371 and other applicable requirements a Form PCT/DO/EO/903 indicating acceptance of the application as a national stage submission under 35 U.S.C. 371 will be issued in addition to the Filing Receipt, in due course.

New International Application Filed with the USPTO as a Receiving Office

If a new international application is being filed and the international application includes the necessary components for an international filing date (see PCT Article 11 and MPEP 1810), a Notification of the International Application Number and of the International Filing Date (Form PCT/RO/105) will be issued in due course, subject to prescriptions concerning national security, and the date shown on this Acknowledgement Receipt will establish the international filing date of the application.

IN THE UNITED STATES PATENT AND TRADEMARK OFFICE

Applicants:	David Chao, Brian Blount, Charles Erickson, Shari Gharavy, Cheng Zhou, Joshua Toub		
Assignee:	Versata Development Group, Inc.		
Title:	METHOD AND SYSTEM FOR MANAGING DISTRIBUTOR INFORMATION		
Serial No.:	09/810,514	Filing Date:	March 15, 2001
Examiner:	Andrew J. Rudy	Group Art Unit:	3687
Docket No.:	T00071	Customer No.:	33438

Austin, Texas
February 6, 2009

FILED ELECTRONICALLY

37 C.F.R. § 1.114 RCE SUBMISSION

Dear Sir:

This paper is a submission in accordance with 37 C.F.R. § 1.114, which accompanies a request for continued examination in the above referenced patent application. This paper responds to the Office Action dated October 6, 2008, having a shortened statutory period expiring on January 6, 2009. Accompanying this response is a petition under 37 C.F.R. § 1.136 for extension of time by one (1) month, setting a new time for response of February 6, 2009. Further examination and reconsideration are respectfully requested in view of the amendments and remarks set forth below.

Ex. 1002 435/597

AMENDMENTS TO THE CLAIMS

1. (Previously Presented) A system for managing relationships between a first party and a second party comprising:

at least one processor;

memory coupled to said at least one processor;

said memory comprising a plurality of modules configured to manage distributor information;

said plurality of modules comprising a selling agreements module configured to generate a selling agreement;

said plurality of modules comprising a commission module configured to determine commission amounts associated with a sales transaction based on said selling agreement;

said plurality of modules comprising a licensing module configured to determine if a party associated with said sales transaction has a valid license to sell products associated with the sales transaction; and

said plurality of modules comprising a payment module for determining payment associated with said sales transaction to said party in accordance with (i) a determination of said commission amounts determined by said commission module and (ii) a determination by said licensing module of whether said party has a valid license to sell the products associated with said sales transaction.

2. (Original) The system of claim 2 wherein said licensing module is further configured to determine if a party associated with said sales transaction comprises a valid appointment.

3. (Original) The system of claim 1 wherein said plurality of modules further comprises a distributor administration module configured to manage information associated with a plurality of distributors.

4. (Original) The system of claim 1 wherein said selling agreement comprises compensation components.

5. (Original) The system of claim 4 wherein said selling agreement comprises document components.

6. (Original) The system of claim 5 wherein said selling agreements module configured to generate said selling agreement utilizes a configuration engine to determine which of said compensation components and said document components to include.

7. (Original) The method of claim 6 wherein said commission module accesses a commission engine to determine said commission amounts.

8. (Original) The system of claim 1 wherein said selling agreement comprises a binding contract between an institution having at least one product and a distributor.

9. (Original) The system of claim 8 wherein said institution comprises financial institution.

10. (Original) The system of claim 8 wherein said product comprise financial product.

11. (Original) The system of claim 10 wherein said financial product comprises life insurance.

12. (Currently Amended) A system for managing relationships between ~~a first party and a second party~~ parties to a selling agreement, the system comprising:

a database source comprising a plurality of data objects representative of at least one distributing party, at least one selling agreement, and at least one license or appointment associated with said at least one distributing party; and

a distributor management engine configured to obtain at least one of said plurality of data objects from said database source and determine whether said at least one distributing party conforms with said at least one selling agreement and said at least one license or appointment is valid to allow the at least one distributing party to sell one or more products of the first party in accordance with the selling agreement.

13. (Original) The system of claim 12 further comprising:

a backbone coupled to said distributor management engine, said backbone configured to transport said at least one of said plurality of data objects.

14. (Original) The system of claim 12 further comprising:
an interface for obtaining a plurality of business rules defining relationships between an institution and said at least one distributing party.

15. (Original) The system of claim 13 further comprising:
a commission engine configured to utilize said backbone to fetch said at least one selling agreement from said database source.

16. (Original) The system of claim 15 wherein said commission engine generates commission schemes utilized to model a set of selling agreement objects.

17. (Original) The system of claim 16 wherein said distributor management engine generates payments based on said selling agreement objects.

18. (Original) The system of claim 12 further comprising:
a workflow process engine configured to process workflow events.

19. (Original) The system of claim 18 wherein said workflow process events are determined by business rules defined by a user.

20. (Original) The system of claim 19 further comprising:
a commerce configuration engine configured to provide a configuration engine access to said business rules.

21. (Original) The system of claim 12 further comprising:
a report engine configured to generate a plurality of reports associated with said at least one distributing party.

22. (Original) The system of claim 21 wherein said report engine utilizes report templates to generate said plurality of reports.

23. (Original) The system of claim 12 further comprising:

a distributor administration module for managing said plurality of data objects.

24. (Currently Amended) The system of claim 12 further comprising:

a licensing and appointment module configured to enable ~~an institution~~ the first party to manage said at least one license or appointments data object for at least one said distributor.

25. (Original) The system of claim 24 wherein said licensing and appointment module is configured to validate license or appointment compliance with a set of industry regulations by evaluating said at least one license or appointment data object.

26. (Original) The system of claim 12 further comprising:

a selling agreements module configured to enable said institution to define and create a business contract with said at least one distributing party.

27. (Original) The system of claim 26 wherein said selling agreements module manages a set of business rules governing how contract components are combined into said at least one selling agreement associated with each of said at least one distributing party.

28. (Original) The system of claim 27 further comprising:

a debt management module configured to enable said institution to manage distributor advances and repayments.

29. (Original) The system of claim 28 wherein said debt management module is utilized to define and manage a set of payment rules defining parameters for paying said at least one distributing party.

30. (Original) The system of claim 12 further comprising:

a net pay module enabling said institution to track and calculate payments to distributors.

31. (Original) The system of claim 12 wherein said institution comprises a financial services institution.

32. (Currently Amended) A system for managing relationships between a first party and a second party comprising:

an interface for obtaining a plurality of business rules defining relationships between ~~an institution~~ a product provider and at least one distributor;

a database source comprising a plurality of data objects representative of said at least one distributor, at least one selling agreement and at least one license or appointment associated with said at least one distributor;

a commission engine configured to determine a commission amount associated with said at least one distributor by evaluating said at least one selling agreement data object;

~~a backbone coupled to said distributor management engine, said backbone configured to transport said at least one of said plurality of data objects to a plurality of modules;~~

[[said]] a plurality of modules comprising, a distributor administration module for managing said plurality of data objects;

said plurality of modules comprising, a licensing and appointment module configured to determine if said at least one license or appointment data object associated with said at least one distributor is in compliance with a set of industry regulations;

said plurality of modules comprising, a selling agreements module configured to enable said ~~institution~~ product provider to define and create a selling agreement with said at least one distributor; and

said plurality of modules comprising, a payment module configured to determine said commission amount to said at least one distributor.

33. (Original) The system of claim 32 wherein said commission engine utilizes said backbone to fetch said at least one selling agreement from said database source.

34. (Original) The system of claim 32 further comprising:

a workflow process engine configured to process workflow events, said workflow process events determined by said business rules.

35. (Original) The system of claim 32 further comprising:

a commerce configuration engine configured to provide access to said business rules.

36. (Original) The system of claim 32 further comprising:

a report engine configured to generate a plurality of reports associated with said at least one distributor.

37. (Original) The system of claim 36 wherein said report engine utilizes report templates to generate said plurality of reports.

38. (Currently Amended) The system of claim 32 wherein said selling agreement comprises a contract between said ~~institution~~ product provider and said at least one distributor.

39. (Original) The system of claim 38 wherein said selling agreements module manages a set of business rules governing how contract components are combined into said at least one selling agreement associated with each of said at least one distributors.

40. (Currently Amended) The system of claim 32 further comprising:

a debt management module configured to enable said ~~institution~~ product provider to manage distributor advances and repayments.

41. (Original) The system of claim 28 wherein said debt management module is utilized to define and manage a set of payment rules defining parameters for paying said at least one distributor.

42. (Currently Amended) The system of claim 12 wherein said ~~institution~~ first party comprises a financial services institution.

43-64. (Canceled).

65. (New) The system of claim 12 further comprising a payment module for determining payment to said at least one distributing party in association with a sales of the one or more products in accordance with (i) a determination of commission amounts in accordance with the at least one selling agreement and (ii) a determination of whether said at least one distributing party has a valid license to sell the one or more products associated with said sales transaction.

66. (New) The system of claim 32 further comprising a backbone coupled to said distributor management engine to transport said at least one of said plurality of data objects to the plurality of modules.

67. (New) The system of claim 32 wherein the payment module is further configured to determine payment to said at least one distributor in association with a sales of one or more products of said product provider in accordance with (i) a determination of commission amounts in accordance with the at least one selling agreement and (ii) a determination of whether said at least one distributor has a valid license to sell the one or more products associated with said sales transaction.

68. (New) The system of claim 32 wherein said product provider comprises a financial services institution.

REMARKS

Claims 1-42 are pending.

Claims 1-42 stand rejected.

Claims 43-64 have been cancelled without prejudice or disclaimer of the subject matter recited therein.

Claims 65-68 have been added.

Claims 12, 24, 32, 38, 40, and 42 have been amended for reasons other than patentability. Claim 12 has been amended for clarity. Claim 24 has been amended to substitute "product provider" for "institution". Claim 32 has been amended to delete an element and to substitute "product provider" for "institution". Claims 38, 40, and 42 have been amended to conform to amended claim 32.

Claim Rejections - 35 U.S.C. § 103

Claims 1-42 stand rejected under 35 U.S.C. § 103(a) as being unpatentable over U.S. Patent No. 6,782,369 to Carrott (hereinafter "*Carrott*") in view of U.S. Publication No. 20010032094 to Ghosh (hereinafter "*Ghosh*"). Applicants respectfully traverse the rejection.

For at least the reasons submitted below, Applicants respectfully submit that claims 1-42 and new claims 65-68 are allowable over *Carrott* in view of *Ghosh*.

Carrott teaches a "computer system and method of allocating commissions for sales made over the Internet and for dividing an otherwise indivisible Internet into defined geographic areas." *Carrott*, Abstract. The computers system and method of *Carrott* more specifically teach "recording sales to exclusive geographic distribution/representation areas placed through an Internet web site", "determining a value of [the] sales to each of [the] geographic distribution/representation areas", and "allocating commissions based solely on [the] value of [the] sales delivered to each of [the] geographic distribution/representation areas." *Id.*, claim 1.

Ghosh teaches "providing a centralized updated and current database that tracks all relevant information related to licensing of agents and agencies." *Ghosh*, para. 0013. "The present

invention further provides agents with information relative to their license status, and requirements for maintaining their certification." *Id.* *Ghosh* teaches a system that "provides a licensing information system that can be used for tracking and maintaining all relevant information regarding a particular individual and their licensing status in addition to relevant information regarding different commercial insurance organizations." *Id.*, para. 0014. *Ghosh* also teaches that the system "has unique and extensive reporting capabilities that facilitate a display of information in a user friendly manner" such as "for state reporting requirements." *Id.*, paras. 0016 and 0049.

Assuming, without admitting, that the combination of *Carrott* and *Ghosh* is appropriate, Applicants respectfully submit that the combination of *Carrott* and *Ghosh* fail to teach or suggest the present invention and fail to achieve the purpose of the present invention.

Claim 1.

The combination of *Carrott* and *Ghosh* results in a system and method that provides commissions to a distributor, store and retrieves licensing information about the distributor, and generates reports regarding, for example, "state licensing requirements". *Ghosh*, para. 0050. However, simply tracking a sale to a distributor and managing the distributor's licensing information as taught by the combination of *Carrott* and *Ghosh* does not in and of itself determine whether or not a distributor has a valid license "to sell products associated with [a] sales transaction" to obtain a commission for the sales transaction. Claim 1. The combination of *Carrott* and *Ghosh* still suffers from deficiencies identified in the Background of the Present Application.

Thus, contrary to the combination of *Carrott* and *Ghosh*, to determine whether a distributor has a valid license, in addition to merely obtaining licensing information, the system must also determine, for example, "if a party associated with said sales transaction has a valid license to sell products associated with the sales transaction**."** *Carrott* in combination with *Ghosh* ("*Carrott/Ghosh combination*") fail to teach or suggest how to apply the licensing information to a distributor. In contrast to the *Carrott/Ghosh combination*, Claim 1 recites "a licensing module **configured to determine if a party associated with said sales transaction has a valid license to sell products** associated with the sales transaction" and "a payment module **for determining payment associated with said sales transaction to said party in accordance** with (i) a determination of said commission amounts determined by said commission module and (ii) **a**

determination by said licensing module of whether said party has a valid license to sell the products associated with said sales transaction."

Thus, the combination of *Carrott* and *Ghosh* is missing elements of Claim 1.

In summary, Applicants respectfully submit that *Carrott* in combination with *Ghosh* only relevantly teach determining commissions for distributors on a geographic basis and obtaining licensing information. Since, (1) the *Carrott/Ghosh combination* fails to teach or suggest "a licensing module configured to determine if a party associated with said sales transaction has a valid license to sell products associated with the sales transaction", (2) fail to teach "a payment module for determining payment associated with said sales transaction to said party in accordance with (i) a determination of said commission amounts determined by said commission module and (ii) a determination by said licensing module of whether said party has a valid license to sell the products associated with said sales transaction", and (3) use of hindsight in view of the present application is impermissible, the present invention of Claim 1 is allowable over the *Carrott/Ghosh combination*.

Claim 12.

Applicants also respectfully submit that independent Claim 12 is allowable. Applicants respectfully submit that the **Office Action provides no support for rejecting Claim 12.**

Applicants respectfully submit that the *Carrott/Ghosh combination* teaches determining commissions for distributors on a geographic basis and obtaining licensing information. However, Applicants respectfully submit that the *Carrott/Ghosh combination* neither teaches nor suggests "a distributor management engine configured to obtain at least one of said plurality of data objects from said database source and **determine whether said at least one distributing party conforms with said at least one selling agreement and said at least one license or appointment is valid** to allow the at least one distributing party to sell one or more products of the first party in accordance with the selling agreement." Applicants respectfully request the Examiner to provide specific references in *Carrott* or *Ghosh* that teach or suggest the invention embodiment of Claim 12 or withdraw the rejection.

Claim 32.

Applicants also respectfully submit that independent Claim 32 is allowable. Applicants respectfully submit that the **Office Action provides no support for rejecting Claim 32.**

Applicants respectfully submit that the *Carrott/Ghosh combination* teaches determining commissions for distributors on a geographic basis and obtaining licensing information. However, Applicants respectfully submit that the *Carrott/Ghosh combination* neither teaches nor suggests "a licensing and appointment module **configured to determine if said at least one license or appointment data object associated with said at least one distributor is in compliance with a set of industry regulations**." Applicants respectfully request the Examiner to provide specific references in *Carrott* or *Ghosh* that teach or suggest the invention embodiment of Claim 32 or withdraw the rejection.

For at least the foregoing reasons, Applicants respectfully request withdrawal of the rejection of claims 1, 12, and 32 and claims directly or indirectly dependent therefrom.

CONCLUSION

In view of the amendments and remarks set forth herein, the application is believed to be in condition for allowance and a notice to that effect is solicited. Nonetheless, should any issues remain that might be subject to resolution through a telephonic interview, the examiner is requested to telephone the undersigned at 512-338-9100.

CERTIFICATE OF TRANSMISSION

I hereby certify that on February 6, 2009 this correspondence is being transmitted via the U.S. Patent & Trademark Office's electronic filing system.

/Kent B. Chambers/

Respectfully submitted,

/Kent B. Chambers/

Kent B. Chambers
Attorney for Applicant(s)
Reg. No. 38,839

Ex. 1002 446/597

IN THE UNITED STATES PATENT AND TRADEMARK OFFICE

Applicants:	David Chao, Brian Blount, Charles Erickson, Shari Gharavy, Cheng Zhou, Joshua Toub		
Assignee:	Versata Development Group, Inc.		
Title:	METHOD AND SYSTEM FOR MANAGING DISTRIBUTOR INFORMATION		
Serial No.:	09/810,514	Filing Date:	March 15, 2001
Examiner:	Andrew J. Rudy	Group Art Unit:	3627
Docket No.:	T00071	Customer No.:	33438

Austin, Texas
February 6, 2009

FILED ELECTRONICALLY

PETITION FOR EXTENSION OF TIME

Dear Sir:

Applicants respectfully petition for a one (1) month extension of time within which to respond to the October 6, 2008, outstanding Office Action, such extension allowing the undersigned until February 6, 2009 to respond.

The extension fee is being paid via the USPTO EFS. Please deduct any additional fee which may be necessary or credit any overpayment to Deposit Account No. 502264.

CERTIFICATE OF TRANSMISSION

I hereby certify that on February 6, 2009 this correspondence is being transmitted via the U.S. Patent & Trademark Office's electronic filing system.

/Kent B. Chambers/

Respectfully submitted,

/Kent B. Chambers/

Kent B. Chambers
Attorney for Applicant(s)
Reg. No. 38,839

PTO/SB/06 (07-06)
Approved for use through 1/31/2007. OMB 0651-0032
U.S. Patent and Trademark Office; U.S. DEPARTMENT OF COMMERCE
Under the Paperwork Reduction Act of 1995, no persons are required to respond to a collection of information unless it displays a valid OMB control number.

PATENT APPLICATION FEE DETERMINATION RECORD

Substitute for Form PTO-875

Application or Docket Number	Filing Date	☐ To be Mailed
09/810,514	03/15/2001	

APPLICATION AS FILED – PART I

FOR	(Column 1) NUMBER FILED	(Column 2) NUMBER EXTRA	SMALL ENTITY ☐ RATE ($)	SMALL ENTITY ☐ FEE ($)	OR	OTHER THAN SMALL ENTITY RATE ($)	OTHER THAN SMALL ENTITY FEE ($)
☐ BASIC FEE (37 CFR 1.16(a), (b), or (c))	N/A	N/A	N/A			N/A	
☐ SEARCH FEE (37 CFR 1.16(k), (i), or (m))	N/A	N/A	N/A			N/A	
☐ EXAMINATION FEE (37 CFR 1.16(o), (p), or (q))	N/A	N/A	N/A			N/A	
TOTAL CLAIMS (37 CFR 1.16(i))	minus 20 =	*	X $ =		OR	X $ =	
INDEPENDENT CLAIMS (37 CFR 1.16(h))	minus 3 =	*	X $ =			X $ =	
☐ APPLICATION SIZE FEE (37 CFR 1.16(s))	If the specification and drawings exceed 100 sheets of paper, the application size fee due is $250 ($125 for small entity) for each additional 50 sheets or fraction thereof. See 35 U.S.C. 41(a)(1)(G) and 37 CFR 1.16(s).						
☐ MULTIPLE DEPENDENT CLAIM PRESENT (37 CFR 1.16(j))							
* If the difference in column 1 is less than zero, enter "0" in column 2.			TOTAL			TOTAL	

APPLICATION AS AMENDED – PART II

AMENDMENT 02/06/2009	(Column 1) CLAIMS REMAINING AFTER AMENDMENT		(Column 2) HIGHEST NUMBER PREVIOUSLY PAID FOR	(Column 3) PRESENT EXTRA	SMALL ENTITY RATE ($)	SMALL ENTITY ADDITIONAL FEE ($)	OR	OTHER THAN SMALL ENTITY RATE ($)	OTHER THAN SMALL ENTITY ADDITIONAL FEE ($)
Total (37 CFR 1.16(i))	* 46	Minus	** 64	= 0	X $ =		OR	X $52=	0
Independent (37 CFR 1.16(h))	* 3	Minus	***5	= 0	X $ =		OR	X $220=	0
☐ Application Size Fee (37 CFR 1.16(s))									
☐ FIRST PRESENTATION OF MULTIPLE DEPENDENT CLAIM (37 CFR 1.16(j))							OR		
					TOTAL ADD'L FEE		OR	TOTAL ADD'L FEE	0

AMENDMENT	(Column 1) CLAIMS REMAINING AFTER AMENDMENT		(Column 2) HIGHEST NUMBER PREVIOUSLY PAID FOR	(Column 3) PRESENT EXTRA	RATE ($)	ADDITIONAL FEE ($)		RATE ($)	ADDITIONAL FEE ($)
Total (37 CFR 1.16(i))	*	Minus	**	=	X $ =		OR	X $ =	
Independent (37 CFR 1.16(h))	*	Minus	***	=	X $ =		OR	X $ =	
☐ Application Size Fee (37 CFR 1.16(s))									
☐ FIRST PRESENTATION OF MULTIPLE DEPENDENT CLAIM (37 CFR 1.16(j))							OR		
					TOTAL ADD'L FEE		OR	TOTAL ADD'L FEE	

* If the entry in column 1 is less than the entry in column 2, write "0" in column 3.

** If the "Highest Number Previously Paid For" IN THIS SPACE is less than 20, enter "20".

*** If the "Highest Number Previously Paid For" IN THIS SPACE is less than 3, enter "3".

The "Highest Number Previously Paid For" (Total or Independent) is the highest number found in the appropriate box in column 1.

Legal Instrument Examiner:
/HELENA PAYTON/

This collection of information is required by 37 CFR 1.16. The information is required to obtain or retain a benefit by the public which is to file (and by the USPTO to process) an application. Confidentiality is governed by 35 U.S.C. 122 and 37 CFR 1.14. This collection is estimated to take 12 minutes to complete, including gathering, preparing, and submitting the completed application form to the USPTO. Time will vary depending upon the individual case. Any comments on the amount of time you require to complete this form and/or suggestions for reducing this burden, should be sent to the Chief Information Officer, U.S. Patent and Trademark Office, U.S. Department of Commerce, P.O. Box 1450, Alexandria, VA 22313-1450. DO NOT SEND FEES OR COMPLETED FORMS TO THIS ADDRESS. **SEND TO: Commissioner for Patents, P.O. Box 1450, Alexandria, VA 22313-1450.**

If you need assistance in completing the form, call 1-800-PTO-9199 and select option 2.

Electronic Patent Application Fee Transmittal

Application Number:	09810514
Filing Date:	15-Mar-2001
Title of Invention:	Method and system for managing distributor information
First Named Inventor/Applicant Name:	David Chao
Filer:	Kent Bryan Chambers/Terri Munoz
Attorney Docket Number:	T00071

Filed as Large Entity

Utility under 35 USC 111(a) Filing Fees

Description	Fee Code	Quantity	Amount	Sub-Total in USD($)
Basic Filing:				
Pages:				
Claims:				
Miscellaneous-Filing:				
Petition:				
Patent-Appeals-and-Interference:				
Post-Allowance-and-Post-Issuance:				
Extension-of-Time:				

Description	Fee Code	Quantity	Amount	Sub-Total in USD($)
Miscellaneous:				
Request for continued examination	1801	1	810	810
		Total in USD ($)		**810**

Electronic Acknowledgement Receipt

EFS ID:	4755313
Application Number:	09810514
International Application Number:	
Confirmation Number:	6193
Title of Invention:	Method and system for managing distributor information
First Named Inventor/Applicant Name:	David Chao
Customer Number:	33438
Filer:	Kent Bryan Chambers/Terri Munoz
Filer Authorized By:	Kent Bryan Chambers
Attorney Docket Number:	T00071
Receipt Date:	09-FEB-2009
Filing Date:	15-MAR-2001
Time Stamp:	11:15:57
Application Type:	Utility under 35 USC 111(a)

Payment information:

Submitted with Payment	yes
Payment Type	Credit Card
Payment was successfully received in RAM	$810
RAM confirmation Number	7159
Deposit Account	502264
Authorized User	CHAMBERS,KENT B

The Director of the USPTO is hereby authorized to charge indicated fees and credit any overpayment as follows:

Charge any Additional Fees required under 37 C.F.R. Section 1.16 (National application filing, search, and examination fees)

Charge any Additional Fees required under 37 C.F.R. Section 1.17 (Patent application and reexamination processing fees)

Charge any Additional Fees required under 37 C.F.R. Section 1.19 (Document supply fees)

Charge any Additional Fees required under 37 C.F.R. Section 1.20 (Post Issuance fees)

Charge any Additional Fees required under 37 C.F.R. Section 1.21 (Miscellaneous fees and charges)

File Listing:

Document Number	Document Description	File Name	File Size(Bytes)/ Message Digest	Multi Part /.zip	Pages (if appl.)
1	Fee Worksheet (PTO-06)	fee-info.pdf	29852 f809767bd50dec71bccf546dd17c989916251c3c	no	2

Warnings:

Information:

Total Files Size (in bytes):	29852

This Acknowledgement Receipt evidences receipt on the noted date by the USPTO of the indicated documents, characterized by the applicant, and including page counts, where applicable. It serves as evidence of receipt similar to a Post Card, as described in MPEP 503.

New Applications Under 35 U.S.C. 111

If a new application is being filed and the application includes the necessary components for a filing date (see 37 CFR 1.53(b)-(d) and MPEP 506), a Filing Receipt (37 CFR 1.54) will be issued in due course and the date shown on this Acknowledgement Receipt will establish the filing date of the application.

National Stage of an International Application under 35 U.S.C. 371

If a timely submission to enter the national stage of an international application is compliant with the conditions of 35 U.S.C. 371 and other applicable requirements a Form PCT/DO/EO/903 indicating acceptance of the application as a national stage submission under 35 U.S.C. 371 will be issued in addition to the Filing Receipt, in due course.

New International Application Filed with the USPTO as a Receiving Office

If a new international application is being filed and the international application includes the necessary components for an international filing date (see PCT Article 11 and MPEP 1810), a Notification of the International Application Number and of the International Filing Date (Form PCT/RO/105) will be issued in due course, subject to prescriptions concerning national security, and the date shown on this Acknowledgement Receipt will establish the international filing date of the application.

UNITED STATES PATENT AND TRADEMARK OFFICE

UNITED STATES DEPARTMENT OF COMMERCE
United States Patent and Trademark Office
Address: COMMISSIONER FOR PATENTS
P.O. Box 1450
Alexandria, Virginia 22313-1450
www.uspto.gov

APPLICATION NO.	FILING DATE	FIRST NAMED INVENTOR	ATTORNEY DOCKET NO.	CONFIRMATION NO.
09/810,514	03/15/2001	David Chao	T00071	6193

33438 7590 03/18/2009

HAMILTON & TERRILE, LLP
P.O. BOX 203518
AUSTIN, TX 78720

EXAMINER	
RUDY, ANDREW J	

ART UNIT	PAPER NUMBER
3687	

NOTIFICATION DATE	DELIVERY MODE
03/18/2009	ELECTRONIC

Please find below and/or attached an Office communication concerning this application or proceeding.

The time period for reply, if any, is set in the attached communication.

Notice of the Office communication was sent electronically on above-indicated "Notification Date" to the following e-mail address(es):

tmunoz@hamiltonterrile.com

Office Action Summary	Application No.	Applicant(s)	
	09/810,514	CHAO ET AL.	
	Examiner	Art Unit	
	Andrew Joseph Rudy	3687	

-- The MAILING DATE of this communication appears on the cover sheet with the correspondence address --

Period for Reply

A SHORTENED STATUTORY PERIOD FOR REPLY IS SET TO EXPIRE *3* MONTH(S) OR THIRTY (30) DAYS, WHICHEVER IS LONGER, FROM THE MAILING DATE OF THIS COMMUNICATION.

- Extensions of time may be available under the provisions of 37 CFR 1.136(a). In no event, however, may a reply be timely filed after SIX (6) MONTHS from the mailing date of this communication.
- If NO period for reply is specified above, the maximum statutory period will apply and will expire SIX (6) MONTHS from the mailing date of this communication.
- Failure to reply within the set or extended period for reply will, by statute, cause the application to become ABANDONED (35 U.S.C. § 133). Any reply received by the Office later than three months after the mailing date of this communication, even if timely filed, may reduce any earned patent term adjustment. See 37 CFR 1.704(b).

Status

1)☒ Responsive to communication(s) filed on *06 February 2009*.

2a)☐ This action is **FINAL**. 2b)☒ This action is non-final.

3)☐ Since this application is in condition for allowance except for formal matters, prosecution as to the merits is closed in accordance with the practice under *Ex parte Quayle*, 1935 C.D. 11, 453 O.G. 213.

Disposition of Claims

4)☒ Claim(s) *1-42 and 65-68* is/are pending in the application.

4a) Of the above claim(s) _____ is/are withdrawn from consideration.

5)☐ Claim(s) _____ is/are allowed.

6)☒ Claim(s) *1-42 and 65-68* is/are rejected.

7)☐ Claim(s) _____ is/are objected to.

8)☐ Claim(s) _____ are subject to restriction and/or election requirement.

Application Papers

9)☐ The specification is objected to by the Examiner.

10)☐ The drawing(s) filed on _____ is/are: a)☐ accepted or b)☐ objected to by the Examiner.

Applicant may not request that any objection to the drawing(s) be held in abeyance. See 37 CFR 1.85(a).

Replacement drawing sheet(s) including the correction is required if the drawing(s) is objected to. See 37 CFR 1.121(d).

11)☐ The oath or declaration is objected to by the Examiner. Note the attached Office Action or form PTO-152.

Priority under 35 U.S.C. § 119

12)☐ Acknowledgment is made of a claim for foreign priority under 35 U.S.C. § 119(a)-(d) or (f).

a)☐ All b)☐ Some * c)☐ None of:

1.☐ Certified copies of the priority documents have been received.

2.☐ Certified copies of the priority documents have been received in Application No. _____.

3.☐ Copies of the certified copies of the priority documents have been received in this National Stage application from the International Bureau (PCT Rule 17.2(a)).

* See the attached detailed Office action for a list of the certified copies not received.

Attachment(s)

1) ☒ Notice of References Cited (PTO-892)
2) ☐ Notice of Draftsperson's Patent Drawing Review (PTO-948)
3) ☒ Information Disclosure Statement(s) (PTO/SB/08) Paper No(s)/Mail Date _____.
4) ☐ Interview Summary (PTO-413) Paper No(s)/Mail Date. _____ .
5) ☐ Notice of Informal Patent Application
6) ☐ Other: _____.

DETAILED ACTION

Continued Examination Under 37 CFR 1.114

1. A request for continued examination under 37 CFR 1.114, including the fee set forth in 37 CFR 1.17(e), was filed in this application after final rejection. Since this application is eligible for continued examination under 37 CFR 1.114, and the fee set forth in 37 CFR 1.17(e) has been timely paid, the finality of the previous Office action has been withdrawn pursuant to 37 CFR 1.114. Applicant's submission filed on February 6, 2009 has been entered. Claims 1-42 and 65-68 are pending. Applicant cancelled claims 43-64.

Claim Rejections - 35 USC § 103

2. Claims 1-42 and 65-68 are rejected under 35 U.S.C. 103(a) as being unpatentable over Carrott, 6,782,369 in view of Ghosh, 2001/0032094 and further in view of Wheeler et al., US 7,200,749.

Carrott discloses, e.g. Figs. 1-5 and related text, a computer program for allocating sales commissions comprising processing sales transaction data, capturing transaction data and determining. Carrott does not disclose determining if sales representative associated with the transaction has a valid license to sell products associated with a sales transaction.

Ghosh discloses sales representative associated with the transaction has a valid license to sell products associated with a sales transaction.

Wheeler discloses electronic communications for an electronic contract. The contract of Wheeler is disclosed as being valid, .e.g. col. 2, lines 23-59.

It would have been obvious to one having ordinary skill in the art at the time the invention was made to incorporate the teachings of Carrott with those of Ghosh to provide licensed sales representatives. The motivation for having done such would have been to use common knowledge to ensure proper compliance with regulatory schemes. Further, it would have been obvious to one having ordinary skill in the art at the time the invention was made to incorporate the teachings of Carrott with those of Ghosh and Wheeler to provide licensed sales representatives having valid licenses to sell the product associated therewith.

Applicant's February 6, 2009 REMARKS with respect to claims 1-42 have been considered but are moot in view of the new grounds of rejection.

It is noted that Applicant has basically taken the common knowledge scheme where the business activity used by distributors of products, e.g. financial instruments, whose contracts are dictated by the rules of well known common contract law has been translated to an electronic format. This is not deemed novel nor unobvious.

3. Further pertinent references of interest are noted on the attached PTO-892.

4. Applicant's Information Disclosure Statements (IDS's) received November 13, 2008 and January 26, 2009 have been reviewed. Note the attached IDS's.

5. Any inquiry concerning this communication or earlier communications from the examiner should be directed to Andrew Joseph Rudy whose telephone number is 571-272-6789. The examiner can normally be reached on Monday thru Friday.

If attempts to reach the examiner by telephone are unsuccessful, the examiner's supervisor, Matthew S. Gart can be reached on 571-272-3955. The fax phone number for the organization where this application or proceeding is assigned is 571-273-8300.

Information regarding the status of an application may be obtained from the Patent Application Information Retrieval (PAIR) system. Status information for published applications may be obtained from either Private PAIR or Public PAIR. Status information for unpublished applications is available through Private PAIR only. For more information about the PAIR system, see http://pair-direct.uspto.gov. Should you have questions on access to the Private PAIR system, contact the Electronic Business Center (EBC) at 866-217-9197 (toll-free). If you would like assistance from a USPTO Customer Service Representative or access to the automated information system, call 800-786-9199 (IN USA OR CANADA) or 571-272-1000.

/Andrew Joseph Rudy/

Primary Examiner, Art Unit 3687

Notice of References Cited	Application/Control No. 09/810,514	Applicant(s)/Patent Under Reexamination CHAO ET AL.	
	Examiner Andrew Joseph Rudy	Art Unit 3687	Page 1 of 1

U.S. PATENT DOCUMENTS

*		Document Number Country Code-Number-Kind Code	Date MM-YYYY	Name	Classification
*	A	US-7,475,025	01-2009	Wiesehuegel et al.	705/26
*	B	US-7,389,259	06-2008	Duncan, Dana B.	705/35
*	C	US-7,373,324	05-2008	Engin et al.	705/36R
*	D	US-7,359,871	04-2008	Paasche et al.	705/26
*	E	US-7,155,409	12-2006	Stroh, Leslie	705/37
	F	US-			
	G	US-			
	H	US-			
	I	US-			
	J	US-			
	K	US-			
	L	US-			
	M	US-			

FOREIGN PATENT DOCUMENTS

*		Document Number Country Code-Number-Kind Code	Date MM-YYYY	Country	Name	Classification
	N					
	O					
	P					
	Q					
	R					
	S					
	T					

NON-PATENT DOCUMENTS

*		Include as applicable: Author, Title Date, Publisher, Edition or Volume, Pertinent Pages)
	U	
	V	
	W	
	X	

*A copy of this reference is not being furnished with this Office action. (See MPEP § 707.05(a).)
Dates in MM-YYYY format are publication dates. Classifications may be US or foreign.

Search Notes	Application/Control No.	Applicant(s)/Patent under Reexamination	
	09/810,514	CHAO ET AL.	
	Examiner	Art Unit	
	Andrew Joseph Rudy	3687	

SEARCHED			
Class	Subclass	Date	Examiner
705	7,10,26	3/10/2009	AJR

INTERFERENCE SEARCHED			
Class	Subclass	Date	Examiner

SEARCH NOTES (INCLUDING SEARCH STRATEGY)		
	DATE	EXMR

U.S. Department of Commerce, Patent and Trademark Office	Attorney Docket No.	Serial No.
	T00071	09/810,514
INFORMATION DISCLOSURE STATEMENT BY APPLICANT	Applicant(s)	
(Use several sheets if necessary)	David Chao et al.	
	Filing Date	Group
	March 15, 2001	3687

U.S. Patent Documents

*Examiner Initial		Document Number	Date	Name	Class	Subclass	Filing Date If Appropriate
	AA						
	AB						
	AC						
	AD						
	AE						
	AF						
	AG						
	AH						
	AI						
	AJ						
	AK						
	AL						
	AM						

Foreign Patent Documents

							Translation	
		Document	Date	Country	Class	Subclass	Yes	No
	An						☐	☐
	AO						☐	☐
	AP						☐	☐
	AQ							
	AR							

OTHER ART (Including Author, Title, Date, Pertinent Pages, Etc.)

	AS	Documents for U.S. Patent Application No. 09/896,144 in the U.S.P.T.O.'s Patent Application Information Retrieval (PAIR) system.
	AT	

Examiner	/Andrew Joseph Rudy/	Date Considered	03/10/2009

*EXAMINER: Initial if reference considered, whether or not citation is in conformance with MPEP 609; Draw line through citation if not in conformance and not considered. Include copy of this form with your communication to applicant.

PTO/SB/08a (05-07)
Approved for use through 09/30/2007. OMB 0651-0031
U.S. Patent and Trademark Office; U.S. DEPARTMENT OF COMMERCE
Under the Paperwork Reduction Act of 1995, no persons are required to respond to a collection of information unless it contains a valid OMB control number.

INFORMATION DISCLOSURE STATEMENT BY APPLICANT

(Not for submission under 37 CFR 1.99)

Application Number	09810514
Filing Date	2001-03-15
First Named Inventor	David Chao
Art Unit	3627
Examiner Name	Andrew J. Rudy
Attorney Docket Number	T00071

U.S.PATENTS

Examiner Initial*	Cite No	Patent Number	Kind Code[1]	Issue Date	Name of Patentee or Applicant of cited Document	Pages,Columns,Lines where Relevant Passages or Relevant Figures Appear
	1					

If you wish to add additional U.S. Patent citation information please click the Add button.

U.S.PATENT APPLICATION PUBLICATIONS

Examiner Initial*	Cite No	Publication Number	Kind Code[1]	Publication Date	Name of Patentee or Applicant of cited Document	Pages,Columns,Lines where Relevant Passages or Relevant Figures Appear
/ AR/	1	20020023109	A1	2002-02-21	Lederer et al.	

If you wish to add additional U.S. Published Application citation information please click the Add button.

FOREIGN PATENT DOCUMENTS

Examiner Initial*	Cite No	Foreign Document Number[3]	Country Code[2] i	Kind Code[4]	Publication Date	Name of Patentee or Applicant of cited Document	Pages,Columns,Lines where Relevant Passages or Relevant Figures Appear	T[5]
	1							☐

If you wish to add additional Foreign Patent Document citation information please click the Add button

NON-PATENT LITERATURE DOCUMENTS

Examiner Initials*	Cite No	Include name of the author (in CAPITAL LETTERS), title of the article (when appropriate), title of the item (book, magazine, journal, serial, symposium, catalog, etc), date, pages(s), volume-issue number(s), publisher, city and/or country where published.	T[5]

/Andrew Joseph Rudy/ 03/10/2009

INFORMATION DISCLOSURE STATEMENT BY APPLICANT (**Not for submission under 37 CFR 1.99)**		
	Application Number	09810514
	Filing Date	2001-03-15
	First Named Inventor	David Chao
	Art Unit	3627
	Examiner Name	Andrew J. Rudy
	Attorney Docket Number	T00071

	1		☐

If you wish to add additional non-patent literature document citation information please click the Add button

EXAMINER SIGNATURE

Examiner Signature	/Andrew Joseph Rudy/	Date Considered	03/10/2009

*EXAMINER: Initial if reference considered, whether or not citation is in conformance with MPEP 609. Draw line through a citation if not in conformance and not considered. Include copy of this form with next communication to applicant.

[1] See Kind Codes of USPTO Patent Documents at www.USPTO.GOV or MPEP 901.04. [2] Enter office that issued the document, by the two-letter code (WIPO Standard ST.3). [3] For Japanese patent documents, the indication of the year of the reign of the Emperor must precede the serial number of the patent document. [4] Kind of document by the appropriate symbols as indicated on the document under WIPO Standard ST.16 if possible. [5] Applicant is to place a check mark here if English language translation is attached.

PTO/SB/08a (04-09)
Approved for use through 05/31/2009. OMB 0651-0031
U.S. Patent and Trademark Office; U.S. DEPARTMENT OF COMMERCE

Under the Paperwork Reduction Act of 1995, no persons are required to respond to a collection of information unless it contains a valid OMB control number.

INFORMATION DISCLOSURE STATEMENT BY APPLICANT

(Not for submission under 37 CFR 1.99)

Application Number	09810514
Filing Date	2001-03-21
First Named Inventor	David Chao
Art Unit	3687
Examiner Name	Andrew J. Rudy
Attorney Docket Number	T00071

U.S.PATENTS

Examiner Initial*	Cite No	Patent Number	Kind Code[1]	Issue Date	Name of Patentee or Applicant of cited Document	Pages,Columns,Lines where Relevant Passages or Relevant Figures Appear
	1					

If you wish to add additional U.S. Patent citation information please click the Add button.

U.S.PATENT APPLICATION PUBLICATIONS

Examiner Initial*	Cite No	Publication Number	Kind Code[1]	Publication Date	Name of Patentee or Applicant of cited Document	Pages,Columns,Lines where Relevant Passages or Relevant Figures Appear
	1	20060206789		2006-09-14	Bakman et al.	

If you wish to add additional U.S. Published Application citation information please click the Add button.

FOREIGN PATENT DOCUMENTS

Examiner Initial*	Cite No	Foreign Document Number[3]	Country Code[2] i	Kind Code[4]	Publication Date	Name of Patentee or Applicant of cited Document	Pages,Columns,Lines where Relevant Passages or Relevant Figures Appear	T[5]
	1							☐

If you wish to add additional Foreign Patent Document citation information please click the Add button

NON-PATENT LITERATURE DOCUMENTS

Examiner Initials*	Cite No	Include name of the author (in CAPITAL LETTERS), title of the article (when appropriate), title of the item (book, magazine, journal, serial, symposium, catalog, etc), date, pages(s), volume-issue number(s), publisher, city and/or country where published.	T[5]

INFORMATION DISCLOSURE STATEMENT BY APPLICANT (**Not for submission under 37 CFR 1.99)**		
	Application Number	09810514
	Filing Date	2001-03-21
	First Named Inventor	David Chao
	Art Unit	3687
	Examiner Name	Andrew J. Rudy
	Attorney Docket Number	T00071

	1	Protect Your Family From Lead In Your Home, May 1995, United States EPA, pgs. 1-16	☐

If you wish to add additional non-patent literature document citation information please click the Add button

EXAMINER SIGNATURE

Examiner Signature		Date Considered	

*EXAMINER: Initial if reference considered, whether or not citation is in conformance with MPEP 609. Draw line through a citation if not in conformance and not considered. Include copy of this form with next communication to applicant.

[1] See Kind Codes of USPTO Patent Documents at www.USPTO.GOV or MPEP 901.04. [2] Enter office that issued the document, by the two-letter code (WIPO Standard ST.3). [3] For Japanese patent documents, the indication of the year of the reign of the Emperor must precede the serial number of the patent document. [4] Kind of document by the appropriate symbols as indicated on the document under WIPO Standard ST.16 if possible. [5] Applicant is to place a check mark here if English language translation is attached.

INFORMATION DISCLOSURE STATEMENT BY APPLICANT

(**Not for submission under 37 CFR 1.99)**

Application Number	09810514
Filing Date	2001-03-21
First Named Inventor	David Chao
Art Unit	3687
Examiner Name	Andrew J. Rudy
Attorney Docket Number	T00071

CERTIFICATION STATEMENT

Please see 37 CFR 1.97 and 1.98 to make the appropriate selection(s):

☐ That each item of information contained in the information disclosure statement was first cited in any communication from a foreign patent office in a counterpart foreign application not more than three months prior to the filing of the information disclosure statement. See 37 CFR 1.97(e)(1).

OR

☐ That no item of information contained in the information disclosure statement was cited in a communication from a foreign patent office in a counterpart foreign application, and, to the knowledge of the person signing the certification after making reasonable inquiry, no item of information contained in the information disclosure statement was known to any individual designated in 37 CFR 1.56(c) more than three months prior to the filing of the information disclosure statement. See 37 CFR 1.97(e)(2).

☐ See attached certification statement.

☐ Fee set forth in 37 CFR 1.17 (p) has been submitted herewith.

☐ None

SIGNATURE

A signature of the applicant or representative is required in accordance with CFR 1.33, 10.18. Please see CFR 1.4(d) for the form of the signature.

Signature		Date (YYYY-MM-DD)	
Name/Print		Registration Number	

This collection of information is required by 37 CFR 1.97 and 1.98. The information is required to obtain or retain a benefit by the public which is to file (and by the USPTO to process) an application. Confidentiality is governed by 35 U.S.C. 122 and 37 CFR 1.14. This collection is estimated to take 1 hour to complete, including gathering, preparing and submitting the completed application form to the USPTO. Time will vary depending upon the individual case. Any comments on the amount of time you require to complete this form and/or suggestions for reducing this burden, should be sent to the Chief Information Officer, U.S. Patent and Trademark Office, U.S. Department of Commerce, P.O. Box 1450, Alexandria, VA 22313-1450. DO NOT SEND FEES OR COMPLETED FORMS TO THIS ADDRESS. **SEND TO: Commissioner for Patents, P.O. Box 1450, Alexandria, VA 22313-1450.**

Privacy Act Statement

The Privacy Act of 1974 (P.L. 93-579) requires that you be given certain information in connection with your submission of the attached form related to a patent application or patent. Accordingly, pursuant to the requirements of the Act, please be advised that: (1) the general authority for the collection of this information is 35 U.S.C. 2(b)(2); (2) furnishing of the information solicited is voluntary; and (3) the principal purpose for which the information is used by the U.S. Patent and Trademark Office is to process and/or examine your submission related to a patent application or patent. If you do not furnish the requested information, the U.S. Patent and Trademark Office may not be able to process and/or examine your submission, which may result in termination of proceedings or abandonment of the application or expiration of the patent.

The information provided by you in this form will be subject to the following routine uses:

1. The information on this form will be treated confidentially to the extent allowed under the Freedom of Information Act (5 U.S.C. 552) and the Privacy Act (5 U.S.C. 552a). Records from this system of records may be disclosed to the Department of Justice to determine whether the Freedom of Information Act requires disclosure of these record s.

2. A record from this system of records may be disclosed, as a routine use, in the course of presenting evidence to a court, magistrate, or administrative tribunal, including disclosures to opposing counsel in the course of settlement negotiations.

3. A record in this system of records may be disclosed, as a routine use, to a Member of Congress submitting a request involving an individual, to whom the record pertains, when the individual has requested assistance from the Member with respect to the subject matter of the record.

4. A record in this system of records may be disclosed, as a routine use, to a contractor of the Agency having need for the information in order to perform a contract. Recipients of information shall be required to comply with the requirements of the Privacy Act of 1974, as amended, pursuant to 5 U.S.C. 552a(m).

5. A record related to an International Application filed under the Patent Cooperation Treaty in this system of records may be disclosed, as a routine use, to the International Bureau of the World Intellectual Property Organization, pursuant to the Patent Cooperation Treaty.

6. A record in this system of records may be disclosed, as a routine use, to another federal agency for purposes of National Security review (35 U.S.C. 181) and for review pursuant to the Atomic Energy Act (42 U.S.C. 218(c)).

7. A record from this system of records may be disclosed, as a routine use, to the Administrator, General Services, or his/her designee, during an inspection of records conducted by GSA as part of that agency's responsibility to recommend improvements in records management practices and programs, under authority of 44 U.S.C. 2904 and 2906. Such disclosure shall be made in accordance with the GSA regulations governing inspection of records for this purpose, and any other relevant (i.e., GSA or Commerce) directive. Such disclosure shall not be used to make determinations about individuals.

8. A record from this system of records may be disclosed, as a routine use, to the public after either publication of the application pursuant to 35 U.S.C. 122(b) or issuance of a patent pursuant to 35 U.S.C. 151. Further, a record may be disclosed, subject to the limitations of 37 CFR 1.14, as a routine use, to the public if the record was filed in an application which became abandoned or in which the proceedings were terminated and which application is referenced by either a published application, an application open to public inspections or an issued patent.

9. A record from this system of records may be disclosed, as a routine use, to a Federal, State, or local law enforcement agency, if the USPTO becomes aware of a violation or potential violation of law or regulation.

Electronic Patent Application Fee Transmittal

Application Number:	09810514
Filing Date:	15-Mar-2001
Title of Invention:	Method and system for managing distributor information
First Named Inventor/Applicant Name:	David Chao
Filer:	Kent Bryan Chambers/Marniki Hornsby
Attorney Docket Number:	T00071

Filed as Large Entity

Utility under 35 USC 111(a) Filing Fees

Description	Fee Code	Quantity	Amount	Sub-Total in USD($)
Basic Filing:				
Pages:				
Claims:				
Miscellaneous-Filing:				
Petition:				
Patent-Appeals-and-Interference:				
Post-Allowance-and-Post-Issuance:				
Extension-of-Time:				

Description	Fee Code	Quantity	Amount	Sub-Total in USD($)
Miscellaneous:				
Submission- Information Disclosure Stmt	1806	1	180	180
		Total in USD ($)		**180**

Electronic Acknowledgement Receipt

EFS ID:	5379195
Application Number:	09810514
International Application Number:	
Confirmation Number:	6193
Title of Invention:	Method and system for managing distributor information
First Named Inventor/Applicant Name:	David Chao
Customer Number:	33438
Filer:	Kent Bryan Chambers/Marniki Hornsby
Filer Authorized By:	Kent Bryan Chambers
Attorney Docket Number:	T00071
Receipt Date:	21-MAY-2009
Filing Date:	15-MAR-2001
Time Stamp:	16:59:17
Application Type:	Utility under 35 USC 111(a)

Payment information:

Submitted with Payment	yes
Payment Type	Credit Card
Payment was successfully received in RAM	$180
RAM confirmation Number	3092
Deposit Account	
Authorized User	

File Listing:

Document Number	Document Description	File Name	File Size(Bytes)/ Message Digest	Multi Part /.zip	Pages (if appl.)
		Ex. 1002 file.pdf			

1	Information Disclosure Statement (IDS) Filed (SB/08)	T00071_IDSTransmittal_05_21_09.pdf	34324 dbc6fa7c9211c1b6ba4f5cefcedb3356b07488af	no	4
Warnings:					
Information:					
This is not an USPTO supplied IDS fillable form					
2	NPL Documents	T00071_ProtectYourFamilyReference_05_21_09.pdf	9062781 cf0194ffa0ededceac7381e9740448495010 6b0b	no	16
Warnings:					
Information:					
3	Fee Worksheet (PTO-875)	fee-info.pdf	29840 d306d95543d4883c26ed220f03fd5d98e69 3b928	no	2
Warnings:					
Information:					
		Total Files Size (in bytes):	9126945		

This Acknowledgement Receipt evidences receipt on the noted date by the USPTO of the indicated documents, characterized by the applicant, and including page counts, where applicable. It serves as evidence of receipt similar to a Post Card, as described in MPEP 503.

<u>New Applications Under 35 U.S.C. 111</u>
If a new application is being filed and the application includes the necessary components for a filing date (see 37 CFR 1.53(b)-(d) and MPEP 506), a Filing Receipt (37 CFR 1.54) will be issued in due course and the date shown on this Acknowledgement Receipt will establish the filing date of the application.

<u>National Stage of an International Application under 35 U.S.C. 371</u>
If a timely submission to enter the national stage of an international application is compliant with the conditions of 35 U.S.C. 371 and other applicable requirements a Form PCT/DO/EO/903 indicating acceptance of the application as a national stage submission under 35 U.S.C. 371 will be issued in addition to the Filing Receipt, in due course.

<u>New International Application Filed with the USPTO as a Receiving Office</u>
If a new international application is being filed and the international application includes the necessary components for an international filing date (see PCT Article 11 and MPEP 1810), a Notification of the International Application Number and of the International Filing Date (Form PCT/RO/105) will be issued in due course, subject to prescriptions concerning national security, and the date shown on this Acknowledgement Receipt will establish the international filing date of the application.

IN THE UNITED STATES PATENT AND TRADEMARK OFFICE

Applicants:	David Chao, Brian Blount, Charles Erickson, Shari Gharavy, Cheng Zhou, Joshua Toub		
Assignee:	Versata Development Group, Inc.		
Title:	METHOD AND SYSTEM FOR MANAGING DISTRIBUTOR INFORMATION		
Serial No.:	09/810,514	Filing Date:	March 15, 2001
Examiner:	Andrew J. Rudy	Group Art Unit:	3687
Docket No.:	T00071	Customer No.:	33438

September 18, 2009

FILED ELECTRONICALLY

RESPONSE TO NON-FINAL OFFICE ACTION

Dear Sir:

This paper is responsive to the Office Action dated March 18, 2008, having a shortened statutory period expiring on June 18, 2009. Accompanying this response is a petition under 37 C.F.R. § 1.136 for extension of time by three (3) months setting a new time for response of September 18, 2009. Further examination and reconsideration are respectfully requested.

Ex. 1002 471/597

AMENDMENTS TO THE CLAIMS

1. (Previously Presented) A system for managing relationships between a first party and a second party comprising:

at least one processor;

memory coupled to said at least one processor;

said memory comprising a plurality of modules configured to manage distributor information;

said plurality of modules comprising a selling agreements module configured to generate a selling agreement;

said plurality of modules comprising a commission module configured to determine commission amounts associated with a sales transaction based on said selling agreement;

said plurality of modules comprising a licensing module configured to determine if a party associated with said sales transaction has a valid license to sell products associated with the sales transaction; and

said plurality of modules comprising a payment module for determining payment associated with said sales transaction to said party in accordance with (i) a determination of said commission amounts determined by said commission module and (ii) a determination by said licensing module of whether said party has a valid license to sell the products associated with said sales transaction.

2. (Original) The system of claim 2 wherein said licensing module is further configured to determine if a party associated with said sales transaction comprises a valid appointment.

3. (Original) The system of claim 1 wherein said plurality of modules further comprises a distributor administration module configured to manage information associated with a plurality of distributors.

4. (Original) The system of claim 1 wherein said selling agreement comprises compensation components.

5. (Original) The system of claim 4 wherein said selling agreement comprises document components.

6. (Original) The system of claim 5 wherein said selling agreements module configured to generate said selling agreement utilizes a configuration engine to determine which of said compensation components and said document components to include.

7. (Original) The method of claim 6 wherein said commission module accesses a commission engine to determine said commission amounts.

8. (Original) The system of claim 1 wherein said selling agreement comprises a binding contract between an institution having at least one product and a distributor.

9. (Original) The system of claim 8 wherein said institution comprises financial institution.

10. (Original) The system of claim 8 wherein said product comprise financial product.

11. (Original) The system of claim 10 wherein said financial product comprises life insurance.

12. (Previously Presented) A system for managing relationships between parties to a selling agreement, the system comprising:

a database source comprising a plurality of data objects representative of at least one distributing party, at least one selling agreement, and at least one license or appointment associated with said at least one distributing party; and

a distributor management engine configured to obtain at least one of said plurality of data objects from said database source and determine whether said at least one distributing party conforms with said at least one selling agreement and said at least one license or appointment is valid to allow the at least one distributing party to sell one or more products of the first party in accordance with the selling agreement.

13. (Original) The system of claim 12 further comprising:

a backbone coupled to said distributor management engine, said backbone configured to transport said at least one of said plurality of data objects.

14. (Original) The system of claim 12 further comprising:
an interface for obtaining a plurality of business rules defining relationships between an institution and said at least one distributing party.

15. (Original) The system of claim 13 further comprising:
a commission engine configured to utilize said backbone to fetch said at least one selling agreement from said database source.

16. (Original) The system of claim 15 wherein said commission engine generates commission schemes utilized to model a set of selling agreement objects.

17. (Original) The system of claim 16 wherein said distributor management engine generates payments based on said selling agreement objects.

18. (Original) The system of claim 12 further comprising:
a workflow process engine configured to process workflow events.

19. (Original) The system of claim 18 wherein said workflow process events are determined by business rules defined by a user.

20. (Original) The system of claim 19 further comprising:
a commerce configuration engine configured to provide a configuration engine access to said business rules.

21. (Original) The system of claim 12 further comprising:
a report engine configured to generate a plurality of reports associated with said at least one distributing party.

22. (Original) The system of claim 21 wherein said report engine utilizes report templates to generate said plurality of reports.

23. (Original) The system of claim 12 further comprising:

a distributor administration module for managing said plurality of data objects.

24. (Previously Presented) The system of claim 12 further comprising:

a licensing and appointment module configured to enable the first party to manage said at least one license or appointments data object for at least one said distributor.

25. (Original) The system of claim 24 wherein said licensing and appointment module is configured to validate license or appointment compliance with a set of industry regulations by evaluating said at least one license or appointment data object.

26. (Original) The system of claim 12 further comprising:

a selling agreements module configured to enable said institution to define and create a business contract with said at least one distributing party.

27. (Original) The system of claim 26 wherein said selling agreements module manages a set of business rules governing how contract components are combined into said at least one selling agreement associated with each of said at least one distributing party.

28. (Original) The system of claim 27 further comprising:

a debt management module configured to enable said institution to manage distributor advances and repayments.

29. (Original) The system of claim 28 wherein said debt management module is utilized to define and manage a set of payment rules defining parameters for paying said at least one distributing party.

30. (Original) The system of claim 12 further comprising:

a net pay module enabling said institution to track and calculate payments to distributors.

31. (Original) The system of claim 12 wherein said institution comprises a financial services institution.

32. (Previously Presented) A system for managing relationships between a first party and a second party comprising:

an interface for obtaining a plurality of business rules defining relationships between a product provider and at least one distributor;

a database source comprising a plurality of data objects representative of said at least one distributor, at least one selling agreement and at least one license or appointment associated with said at least one distributor;

a commission engine configured to determine a commission amount associated with said at least one distributor by evaluating said at least one selling agreement data object;

a plurality of modules comprising, a distributor administration module for managing said plurality of data objects;

said plurality of modules comprising, a licensing and appointment module configured to determine if said at least one license or appointment data object associated with said at least one distributor is in compliance with a set of industry regulations;

said plurality of modules comprising, a selling agreements module configured to enable said product provider to define and create a selling agreement with said at least one distributor; and

said plurality of modules comprising, a payment module configured to determine said commission amount to said at least one distributor.

33. (Original) The system of claim 32 wherein said commission engine utilizes said backbone to fetch said at least one selling agreement from said database source.

34. (Original) The system of claim 32 further comprising:

a workflow process engine configured to process workflow events, said workflow process events determined by said business rules.

35. (Original) The system of claim 32 further comprising:

a commerce configuration engine configured to provide access to said business rules.

36. (Original) The system of claim 32 further comprising:

a report engine configured to generate a plurality of reports associated with said at least one distributor.

37. (Original) The system of claim 36 wherein said report engine utilizes report templates to generate said plurality of reports.

38. (Previously Presented) The system of claim 32 wherein said selling agreement comprises a contract between said product provider and said at least one distributor.

39. (Original) The system of claim 38 wherein said selling agreements module manages a set of business rules governing how contract components are combined into said at least one selling agreement associated with each of said at least one distributors.

40. (Previously Presented) The system of claim 32 further comprising:

a debt management module configured to enable said product provider to manage distributor advances and repayments.

41. (Original) The system of claim 28 wherein said debt management module is utilized to define and manage a set of payment rules defining parameters for paying said at least one distributor.

42. (Previously Presented) The system of claim 12 wherein said first party comprises a financial services institution.

43-64. (Canceled).

65. (New) The system of claim 12 further comprising a payment module for determining payment to said at least one distributing party in association with a sales of the one or more products in accordance with (i) a determination of commission amounts in accordance with the at least one selling agreement and (ii) a determination of whether said at least one distributing party has a valid license to sell the one or more products associated with said sales transaction.

66. (New) The system of claim 32 further comprising a backbone coupled to said distributor management engine to transport said at least one of said plurality of data objects to the plurality of modules.

Ex. 1002 477/597

66. (New) The system of claim 32 wherein the payment module is further configured to determine payment to said at least one distributor in association with a sales of one or more products of said product provider in accordance with (i) a determination of commission amounts in accordance with the at least one selling agreement and (ii) a determination of whether said at least one distributor has a valid license to sell the one or more products associated with said sales transaction.

67. (New) The system of claim 32 wherein said product provider comprises a financial services institution.

Ex. 1002 478/597

REMARKS

Claims 1-42 and 65-68 are pending.

Claims 1-42 and 65-68 stand rejected.

Claims 43-64 have been cancelled without prejudice or disclaimer of the subject matter recited therein.

Claim Rejections - 35 U.S.C. § 103

Claims 1-42 stand rejected under 35 U.S.C. § 103(a) as being unpatentable over U.S. Patent No. 6,782,369 to Carrott (hereinafter "*Carrott*") in view of U.S. Publication No. 20010032094 to Ghosh (hereinafter "*Ghosh*") and U.S. Patent No. 7,200,749 to Wheeler et al. (hereinafter "*Wheeler*"). Applicants respectfully traverse the rejection.

For at least the reasons submitted below, Applicants respectfully submit that claims 1-42 and claims 65-67 are allowable over *Carrott* in view of *Ghosh* and *Wheeler*.

Carrott teaches a "computer system and method of allocating commissions for sales made over the Internet and for dividing an otherwise indivisible Internet into defined geographic areas." *Carrott*, Abstract. The computers system and method of *Carrott* more specifically teach "recording sales to exclusive geographic distribution/representation areas placed through an Internet web site", "determining a value of [the] sales to each of [the] geographic distribution/representation areas", and "allocating commissions based solely on [the] value of [the] sales delivered to each of [the] geographic distribution/representation areas." *Id.*, claim 1.

Ghosh teaches "providing a centralized updated and current database that tracks all relevant information related to licensing of agents and agencies." *Ghosh*, para. 0013. "The present invention further provides agents with information relative to their license status, and requirements for maintaining their certification." *Id.* *Ghosh* teaches a system that "provides a licensing information system that can be used for tracking and maintaining all relevant information regarding a particular individual and their licensing status in addition to relevant information regarding different commercial insurance organizations." *Id.*, para. 0014. *Ghosh* also teaches that the system

"has unique and extensive reporting capabilities that facilitate a display of information in a user friendly manner" such as "for state reporting requirements." *Id*., paras. 0016 and 0049.

Wheeler has a 35 U.S.C. § 371 filing date of December 20, 2002, a PCT filing date of Aug. 6, 2001, and claims priority to U.S. Provisional Application No. 60/223,076 filed on August 4, 2000 (hereinafter "*Wheeler Provisional*"). The present application has a filing date of March 15, 2001. *Wheeler* is only prior art under 35 U.S.C. § 102(e) to the extent that all the subject matter relied upon for the rejection is found in both *Wheeler* and *Wheeler Provisional*. See, *Ex parte Yamaguchi*, No. 2007-4412 (B.P.A.I. August 29, 2008). Thus, since *Wheeler* cannot be prior art for teachings not found in *Wheeler Provisional*, Applicants will discuss the rejection in view of *Wheeler Provisional*.

The *Wheeler Provisional* is generally directed towards an Account Authority Digital Signature (AADS) infrastructure. "AADS is [a] straight-forward upgrade to all exiting shared-secret authentication business processes (upgrade from shared secret to digital signature using existing business processes." *Wheeler Provisional*, Exhibit 1, page 1. *Wheeler Provisional* teaches that "one of the inhibitors to the deployment of high integrity business processes has been the lack of [a] strong authentication infrastructure (a chain is no stronger than its weakest link)." *Id*., Exhibit 2, page 11. "Account Authority Digital Signature is a practical application of digital signatures for strong authentication which is opening up practical high integrity business processes." *Id*, pages 11-12. *Wheeler Provisional* describes a system for authenticating digital signatures.

Assuming, without admitting, that the combination of *Carrott*, *Ghosh*, and *Wheeler Provisional* is appropriate, Applicants respectfully submit that *Carrott* in view of *Ghosh* and *Wheeler Provisional* fail to teach or suggest the present invention and fail to achieve the purpose of the present invention.

Claim 1.

The combination of *Carrott*, *Ghosh*, and *Wheeler Provisional* results in a system and method that provides commissions to a distributor, store and retrieves licensing information about the distributor, generates reports regarding, for example, state licensing requirements, and

authenticates digital signatures. *Wheeler* is cited in the Office Action as disclosing "electronic communications for an electronic contract." Office Action, p. 2. "The contract of *Wheeler* is disclosed as being valid." *Id*. However, *Wheeler Provisional* is clearly directed towards authenticating digital signatures. The contract would be valid because the digital signature is valid. However, simply having a valid contract with an authenticated digital signal does **not** supply the teaching missing from *Carrott* and *Ghosh*, namely, determining whether or not a distributor has a valid license "to sell products associated with [a] sales transaction" to obtain a commission for the sales transaction. Claim 1. The combination of simply tracking a sale to a distributor, managing the distributor's licensing information as taught by the combination of *Carrott* and *Ghosh*, and authenticating digital signatures as taught by *Wheeler Provisional* does not in and of itself determine whether or not a distributor has a valid license "to sell products associated with [a] sales transaction" to obtain a commission for the sales transaction. Claim 1. The combination of *Carrott*, *Ghosh*, and *Wheeler Provisional* still suffers from deficiencies identified in the Background of the Present Application.

Thus, contrary to the combination of *Carrott*, *Ghosh*, and *Wheeler Provisional* , to determine whether a distributor has a valid license, in addition to merely obtaining licensing information, the system must also determine, for example, "if a party associated with said sales transaction has a valid license to sell products associated with the sales transaction**."** *Carrott* in combination with *Ghosh* and *Wheeler Provisional* ("*Carrott/Ghosh/Wheeler Provisional combination"*) fail to teach or suggest how to apply the licensing information to a distributor and authenticating a digital signature in *Wheeler Provisional* does not provide the missing teaching. Although the open ended language of the claims of the present application do not prevent using authenticated digital signatures, in contrast to the *Carrott/Ghosh/Wheeler Provisional combination*, Claim 1 recites "a licensing module **configured to determine if a party associated with said sales transaction has a valid license to sell products** associated with the sales transaction" and "a payment module **for determining payment associated with said sales transaction to said party in accordance** with (i) a determination of said commission amounts determined by said commission module and (ii) **a determination by said licensing module of whether said party has a valid license to sell the products associated with said sales transaction**."

Ex. 1002 481/597

Thus, the combination of *Carrott* in view of *Ghosh* and *Wheeler Provisional* is missing elements of Claim 1 and, therefore, cannot teach or suggest the present invention of claim 1.

In summary, Applicants respectfully submit that *Carrott* in combination with *Ghosh* and *Wheeler Provisional* only relevantly teach determining commissions for distributors on a geographic basis, obtaining licensing information, and authenticating digital signatures. Since, (1) the *Carrott/Ghosh/Wheeler Provisional combination* fails to teach or suggest "a licensing module configured to determine if a party associated with said sales transaction has a valid license to sell products associated with the sales transaction", (2) fails to teach "a payment module for determining payment associated with said sales transaction to said party in accordance with (i) a determination of said commission amounts determined by said commission module and (ii) a determination by said licensing module of whether said party has a valid license to sell the products associated with said sales transaction", and (3) use of hindsight in view of the present application is impermissible, the present invention of Claim 1 is allowable over the *Carrott/Ghosh/Wheeler Provisional combination*.

Claim 12.

Applicants also respectfully submit that independent Claim 12 is allowable. Applicants respectfully submit that the **Office Action provides no support for rejecting Claim 12.**

Applicants respectfully submit that the *Carrott/Ghosh/Wheeler Provisional combination* teaches determining commissions for distributors on a geographic basis, obtaining licensing information, and authenticating digital signatures. However, Applicants respectfully submit that the *Carrott/Ghosh/Wheeler Provisional combination* neither teaches nor suggests "a distributor management engine configured to obtain at least one of said plurality of data objects from said database source and **determine whether said at least one distributing party conforms with said at least one selling agreement and said at least one license or appointment is valid** to allow the at least one distributing party to sell one or more products of the first party in accordance with the selling agreement."

Ex. 1002 482/597

Claim 32.

Applicants also respectfully submit that independent Claim 32 is allowable. Applicants respectfully submit that the **Office Action provides no support for rejecting Claim 32.**

Applicants respectfully submit that the *Carrott/Ghosh/Wheeler Provisional combination* teaches determining commissions for distributors on a geographic basis, obtaining licensing information, and authenticating digital signatures. However, Applicants respectfully submit that the *Carrott/Ghosh/Wheeler Provisional combination* neither teaches nor suggests "a licensing and appointment module **configured to determine if said at least one license or appointment data object associated with said at least one distributor is in compliance with a set of industry regulations**."

For at least the foregoing reasons, Applicants respectfully request withdrawal of the rejection of claims 1, 12, and 32 and claims directly or indirectly dependent therefrom.

CONCLUSION

In view of the amendments and remarks set forth herein, the application is believed to be in condition for allowance and a notice to that effect is solicited. Nonetheless, should any issues remain that might be subject to resolution through a telephonic interview, the examiner is requested to telephone the undersigned at 512-338-9100.

CERTIFICATE OF TRANSMISSION

I hereby certify that on September 18, 2009 this correspondence is being transmitted via the U.S. Patent & Trademark Office's electronic filing system.

/Kent B. Chambers/

Respectfully submitted,

/Kent B. Chambers/

Kent B. Chambers
Attorney for Applicant(s)
Reg. No. 38,839

Ex. 1002 483/597

IN THE UNITED STATES PATENT AND TRADEMARK OFFICE

Applicants:	David Chao, Brian Blount, Charles Erickson, Shari Gharavy, Cheng Zhou, Joshua Toub		
Assignee:	Versata Development Group, Inc.		
Title:	METHOD AND SYSTEM FOR MANAGING DISTRIBUTOR INFORMATION		
Serial No.:	09/810,514	Filing Date:	March 15, 2001
Examiner:	Andrew J. Rudy	Group Art Unit:	3627
Docket No.:	T00071	Customer No.:	33438

Austin, Texas
September 18, 2009

FILED ELECTRONICALLY

PETITION FOR EXTENSION OF TIME

Dear Sir:

Applicants respectfully petition for a three (3) month extension of time within which to respond to the March 18, 2009, outstanding Office Action, such extension allowing the undersigned until September 18, 2009 to respond.

The extension fee is being paid via the USPTO EFS. Please deduct any additional fee which may be necessary or credit any overpayment to Deposit Account No. 502264.

CERTIFICATE OF TRANSMISSION

I hereby certify that on September 18, 2009 this correspondence is being transmitted via the U.S. Patent & Trademark Office's electronic filing system.

/Kent B. Chambers/

Respectfully submitted,

/Kent B. Chambers/

Kent B. Chambers
Attorney for Applicant(s)
Reg. No. 38,839

Electronic Patent Application Fee Transmittal

Application Number:	09810514
Filing Date:	15-Mar-2001
Title of Invention:	Method and system for managing distributor information
First Named Inventor/Applicant Name:	David Chao
Filer:	Kent Bryan Chambers
Attorney Docket Number:	T00071

Filed as Large Entity

Utility under 35 USC 111(a) Filing Fees

Description	Fee Code	Quantity	Amount	Sub-Total in USD($)
Basic Filing:				
Pages:				
Claims:				
Miscellaneous-Filing:				
Petition:				
Patent-Appeals-and-Interference:				
Post-Allowance-and-Post-Issuance:				
Extension-of-Time:				
Extension - 3 months with $0 paid	1253	1	1110	1110

Description	Fee Code	Quantity	Amount	Sub-Total in USD($)
Miscellaneous:				
			Total in USD ($)	**1110**

Electronic Acknowledgement Receipt

EFS ID:	6104579
Application Number:	09810514
International Application Number:	
Confirmation Number:	6193
Title of Invention:	Method and system for managing distributor information
First Named Inventor/Applicant Name:	David Chao
Customer Number:	33438
Filer:	Kent Bryan Chambers
Filer Authorized By:	
Attorney Docket Number:	T00071
Receipt Date:	18-SEP-2009
Filing Date:	15-MAR-2001
Time Stamp:	18:18:25
Application Type:	Utility under 35 USC 111(a)

Payment information:

Submitted with Payment	yes
Payment Type	Credit Card
Payment was successfully received in RAM	$1110
RAM confirmation Number	4260
Deposit Account	
Authorized User	

File Listing:

Document Number	Document Description	File Name	File Size(Bytes)/ Message Digest	Multi Part /.zip	Pages (if appl.)
		Ex. 1002.pdf			

1	Amendment/Req. Reconsideration-After Non-Final Reject	T00071_ROA_03_18_09.pdf	145873 7ed68a7db6ec3ead29c8eb0149ce8a902f8c4fbb	no	13
Warnings:					
Information:					
2	Extension of Time	T00071_Extension_9_18_2009.pdf	80965 6ba8f74ec2b81cfdb6f040c1299a661509602360	no	1
Warnings:					
Information:					
3	Fee Worksheet (PTO-875)	fee-info.pdf	29762 28ff1f6c86f34a535afb98d81a5fb814baf4d766	no	2
Warnings:					
Information:					
			Total Files Size (in bytes):	256600	

This Acknowledgement Receipt evidences receipt on the noted date by the USPTO of the indicated documents, characterized by the applicant, and including page counts, where applicable. It serves as evidence of receipt similar to a Post Card, as described in MPEP 503.

New Applications Under 35 U.S.C. 111

If a new application is being filed and the application includes the necessary components for a filing date (see 37 CFR 1.53(b)-(d) and MPEP 506), a Filing Receipt (37 CFR 1.54) will be issued in due course and the date shown on this Acknowledgement Receipt will establish the filing date of the application.

National Stage of an International Application under 35 U.S.C. 371

If a timely submission to enter the national stage of an international application is compliant with the conditions of 35 U.S.C. 371 and other applicable requirements a Form PCT/DO/EO/903 indicating acceptance of the application as a national stage submission under 35 U.S.C. 371 will be issued in addition to the Filing Receipt, in due course.

New International Application Filed with the USPTO as a Receiving Office

If a new international application is being filed and the international application includes the necessary components for an international filing date (see PCT Article 11 and MPEP 1810), a Notification of the International Application Number and of the International Filing Date (Form PCT/RO/105) will be issued in due course, subject to prescriptions concerning national security, and the date shown on this Acknowledgement Receipt will establish the international filing date of the application.

PTO/SB/06 (07-06)
Approved for use through 1/31/2007. OMB 0651-0032
U.S. Patent and Trademark Office; U.S. DEPARTMENT OF COMMERCE
Under the Paperwork Reduction Act of 1995, no persons are required to respond to a collection of information unless it displays a valid OMB control number.

PATENT APPLICATION FEE DETERMINATION RECORD Substitute for Form PTO-875	Application or Docket Number 09/810,514	Filing Date 03/15/2001	☐ To be Mailed

APPLICATION AS FILED – PART I

	(Column 1)	(Column 2)	SMALL ENTITY ☐		OR	OTHER THAN SMALL ENTITY	
FOR	NUMBER FILED	NUMBER EXTRA	RATE ($)	FEE ($)		RATE ($)	FEE ($)
☐ BASIC FEE (37 CFR 1.16(a), (b), or (c))	N/A	N/A	N/A			N/A	
☐ SEARCH FEE (37 CFR 1.16(k), (i), or (m))	N/A	N/A	N/A			N/A	
☐ EXAMINATION FEE (37 CFR 1.16(o), (p), or (q))	N/A	N/A	N/A			N/A	
TOTAL CLAIMS (37 CFR 1.16(i))	minus 20 =	*	X $ =		OR	X $ =	
INDEPENDENT CLAIMS (37 CFR 1.16(h))	minus 3 =	*	X $ =			X $ =	
☐ APPLICATION SIZE FEE (37 CFR 1.16(s))	If the specification and drawings exceed 100 sheets of paper, the application size fee due is $250 ($125 for small entity) for each additional 50 sheets or fraction thereof. See 35 U.S.C. 41(a)(1)(G) and 37 CFR 1.16(s).						
☐ MULTIPLE DEPENDENT CLAIM PRESENT (37 CFR 1.16(j))							
* If the difference in column 1 is less than zero, enter "0" in column 2.			TOTAL			TOTAL	

APPLICATION AS AMENDED – PART II

AMENDMENT	09/18/2009	(Column 1) CLAIMS REMAINING AFTER AMENDMENT		(Column 2) HIGHEST NUMBER PREVIOUSLY PAID FOR	(Column 3) PRESENT EXTRA	SMALL ENTITY RATE ($)	ADDITIONAL FEE ($)	OR	OTHER THAN SMALL ENTITY RATE ($)	ADDITIONAL FEE ($)
	Total (37 CFR 1.16(i))	* 46	Minus	** 64	= 0	X $ =		OR	X $52=	0
	Independent (37 CFR 1.16(h))	* 3	Minus	***5	= 0	X $ =		OR	X $220=	0
	☐ Application Size Fee (37 CFR 1.16(s))									
	☐ FIRST PRESENTATION OF MULTIPLE DEPENDENT CLAIM (37 CFR 1.16(j))							OR		
						TOTAL ADD'L FEE		OR	TOTAL ADD'L FEE	0

AMENDMENT		(Column 1) CLAIMS REMAINING AFTER AMENDMENT		(Column 2) HIGHEST NUMBER PREVIOUSLY PAID FOR	(Column 3) PRESENT EXTRA	RATE ($)	ADDITIONAL FEE ($)		RATE ($)	ADDITIONAL FEE ($)
	Total (37 CFR 1.16(i))	*	Minus	**	=	X $ =		OR	X $ =	
	Independent (37 CFR 1.16(h))	*	Minus	***	=	X $ =		OR	X $ =	
	☐ Application Size Fee (37 CFR 1.16(s))									
	☐ FIRST PRESENTATION OF MULTIPLE DEPENDENT CLAIM (37 CFR 1.16(j))							OR		
						TOTAL ADD'L FEE		OR	TOTAL ADD'L FEE	

* If the entry in column 1 is less than the entry in column 2, write "0" in column 3.

** If the "Highest Number Previously Paid For" IN THIS SPACE is less than 20, enter "20".

*** If the "Highest Number Previously Paid For" IN THIS SPACE is less than 3, enter "3".

The "Highest Number Previously Paid For" (Total or Independent) is the highest number found in the appropriate box in column 1.

Legal Instrument Examiner:
/CAROL BARNES/

This collection of information is required by 37 CFR 1.16. The information is required to obtain or retain a benefit by the public which is to file (and by the USPTO to process) an application. Confidentiality is governed by 35 U.S.C. 122 and 37 CFR 1.14. This collection is estimated to take 12 minutes to complete, including gathering, preparing, and submitting the completed application form to the USPTO. Time will vary depending upon the individual case. Any comments on the amount of time you require to complete this form and/or suggestions for reducing this burden, should be sent to the Chief Information Officer, U.S. Patent and Trademark Office, U.S. Department of Commerce, P.O. Box 1450, Alexandria, VA 22313-1450. DO NOT SEND FEES OR COMPLETED FORMS TO THIS ADDRESS. **SEND TO: Commissioner for Patents, P.O. Box 1450, Alexandria, VA 22313-1450.**

If you need assistance in completing the form, call 1-800-PTO-9199 and select option 2.

UNITED STATES PATENT AND TRADEMARK OFFICE

UNITED STATES DEPARTMENT OF COMMERCE
United States Patent and Trademark Office
Address: COMMISSIONER FOR PATENTS
P.O. Box 1450
Alexandria, Virginia 22313-1450
www.uspto.gov

APPLICATION NO.	FILING DATE	FIRST NAMED INVENTOR	ATTORNEY DOCKET NO.	CONFIRMATION NO.
09/810,514	03/15/2001	David Chao	T00071	6193

33438 7590 01/25/2010

HAMILTON & TERRILE, LLP
P.O. BOX 203518
AUSTIN, TX 78720

EXAMINER	
RUDY, ANDREW J	

ART UNIT	PAPER NUMBER
3687	

NOTIFICATION DATE	DELIVERY MODE
01/25/2010	ELECTRONIC

Please find below and/or attached an Office communication concerning this application or proceeding.

The time period for reply, if any, is set in the attached communication.

Notice of the Office communication was sent electronically on above-indicated "Notification Date" to the following e-mail address(es):

tmunoz@hamiltonterrile.com

Office Action Summary	Application No.	Applicant(s)	
	09/810,514	CHAO ET AL.	
	Examiner	Art Unit	
	Andrew Joseph Rudy	3687	

-- The MAILING DATE of this communication appears on the cover sheet with the correspondence address --

Period for Reply

A SHORTENED STATUTORY PERIOD FOR REPLY IS SET TO EXPIRE *1* MONTH(S) OR THIRTY (30) DAYS, WHICHEVER IS LONGER, FROM THE MAILING DATE OF THIS COMMUNICATION.

- Extensions of time may be available under the provisions of 37 CFR 1.136(a). In no event, however, may a reply be timely filed after SIX (6) MONTHS from the mailing date of this communication.
- If NO period for reply is specified above, the maximum statutory period will apply and will expire SIX (6) MONTHS from the mailing date of this communication.
- Failure to reply within the set or extended period for reply will, by statute, cause the application to become ABANDONED (35 U.S.C. § 133). Any reply received by the Office later than three months after the mailing date of this communication, even if timely filed, may reduce any earned patent term adjustment. See 37 CFR 1.704(b).

Status

1)☒ Responsive to communication(s) filed on *18 September 2009*.

2a)☐ This action is **FINAL**. 2b)☐ This action is non-final.

3)☐ Since this application is in condition for allowance except for formal matters, prosecution as to the merits is closed in accordance with the practice under *Ex parte Quayle*, 1935 C.D. 11, 453 O.G. 213.

Disposition of Claims

4)☒ Claim(s) *1-42 and 65-68* is/are pending in the application.

4a) Of the above claim(s) _____ is/are withdrawn from consideration.

5)☐ Claim(s) _____ is/are allowed.

6)☒ Claim(s) *1-42 and 65-68* is/are rejected.

7)☐ Claim(s) _____ is/are objected to.

8)☐ Claim(s) _____ are subject to restriction and/or election requirement.

Application Papers

9)☐ The specification is objected to by the Examiner.

10)☐ The drawing(s) filed on _____ is/are: a)☐ accepted or b)☐ objected to by the Examiner.

Applicant may not request that any objection to the drawing(s) be held in abeyance. See 37 CFR 1.85(a).

Replacement drawing sheet(s) including the correction is required if the drawing(s) is objected to. See 37 CFR 1.121(d).

11)☐ The oath or declaration is objected to by the Examiner. Note the attached Office Action or form PTO-152.

Priority under 35 U.S.C. § 119

12)☐ Acknowledgment is made of a claim for foreign priority under 35 U.S.C. § 119(a)-(d) or (f).

a)☐ All b)☐ Some * c)☐ None of:

1.☐ Certified copies of the priority documents have been received.

2.☐ Certified copies of the priority documents have been received in Application No. _____.

3.☐ Copies of the certified copies of the priority documents have been received in this National Stage application from the International Bureau (PCT Rule 17.2(a)).

* See the attached detailed Office action for a list of the certified copies not received.

Attachment(s)

1) ☒ Notice of References Cited (PTO-892)
2) ☐ Notice of Draftsperson's Patent Drawing Review (PTO-948)
3) ☐ Information Disclosure Statement(s) (PTO/SB/08) Paper No(s)/Mail Date _____.
4) ☐ Interview Summary (PTO-413) Paper No(s)/Mail Date. _____ .
5) ☐ Notice of Informal Patent Application
6) ☐ Other: _____.

DETAILED ACTION

Response to Amendment

1. The reply filed on September 18, 2009 is not fully responsive to the prior Office Action because of the following omission(s) or matter(s): Claims 65-67 are listed as "(New)" from the 9/18/09 Amendment. Also, claim 68 is not listed with the other claims from the 9/18/09 Amendment. However, claims 65-68 were previously presented from the February 6, 2009 Amendment. Thus, the labeling of these claims is not correct. Clarification is required as to the status of the claims. See 37 CFR 1.111. Since the above-mentioned reply appears to be *bona fide*, applicant is given **ONE (1) MONTH or THIRTY (30) DAYS** from the mailing date of this notice, whichever is longer, within which to supply the omission or correction in order to avoid abandonment. EXTENSIONS OF THIS TIME PERIOD MAY BE GRANTED UNDER 37 CFR 1.136(a).

2. Claims 1-42 and 65-68 remain rejected pursuant to the previous Office Action mailed March 18, 2009.

3. A further reference of interest, Coakley US 6,470,318 discloses and exclusive licensing agreement. See the attached PTO-892.

4. Applicant's Information Disclosure Statement (IDS) submitted May 21, 2009 is noted. The IDS will be reviewed in due course.

5. Any inquiry concerning this communication or earlier communications from the examiner should be directed to Andrew Joseph Rudy whose telephone number is 571-272-6789. The examiner can normally be reached on Monday thru Friday.

If attempts to reach the examiner by telephone are unsuccessful, the examiner's supervisor, Matthew S. Gart can be reached on 571-272-3955. The fax phone number for the organization where this application or proceeding is assigned is 571-273-8300.

Information regarding the status of an application may be obtained from the Patent Application Information Retrieval (PAIR) system. Status information for published applications may be obtained from either Private PAIR or Public PAIR. Status information for unpublished applications is available through Private PAIR only. For more information about the PAIR system, see http://pair-direct.uspto.gov. Should you have questions on access to the Private PAIR system, contact the Electronic Business Center (EBC) at 866-217-9197 (toll-free). If you would like assistance from a USPTO Customer Service Representative or access to the automated information system, call 800-786-9199 (IN USA OR CANADA) or 571-272-1000.

/Andrew Joseph Rudy/
Primary Examiner, Art Unit 3687

Notice of References Cited	Application/Control No. 09/810,514	Applicant(s)/Patent Under Reexamination CHAO ET AL.	
	Examiner Andrew Joseph Rudy	Art Unit 3687	Page 1 of 1

U.S. PATENT DOCUMENTS

*		Document Number Country Code-Number-Kind Code	Date MM-YYYY	Name	Classification
*	A	US-6,470,318	10-2002	Coakley, Lisabeth H.	705/1
	B	US-			
	C	US-			
	D	US-			
	E	US-			
	F	US-			
	G	US-			
	H	US-			
	I	US-			
	J	US-			
	K	US-			
	L	US-			
	M	US-			

FOREIGN PATENT DOCUMENTS

*		Document Number Country Code-Number-Kind Code	Date MM-YYYY	Country	Name	Classification
	N					
	O					
	P					
	Q					
	R					
	S					
	T					

NON-PATENT DOCUMENTS

*		Include as applicable: Author, Title Date, Publisher, Edition or Volume, Pertinent Pages)
	U	
	V	
	W	
	X	

*A copy of this reference is not being furnished with this Office action. (See MPEP § 707.05(a).)
Dates in MM-YYYY format are publication dates. Classifications may be US or foreign.

IN THE UNITED STATES PATENT AND TRADEMARK OFFICE

Applicants:	David Chao, Brian Blount, Charles Erickson, Shari Gharavy, Cheng Zhou, Joshua Toub		
Assignee:	Versata Development Group, Inc.		
Title:	METHOD AND SYSTEM FOR MANAGING DISTRIBUTOR INFORMATION		
Serial No.:	09/810,514	Filing Date:	March 15, 2001
Examiner:	Andrew J. Rudy	Group Art Unit:	3687
Docket No.:	T00071	Customer No.:	33438

February 25, 2010

FILED ELECTRONICALLY

RESPONSE TO NON-FINAL OFFICE ACTION - RESUBMISSION

Dear Sir:

This paper is responsive to the Office Action dated January 25, 2010, having a shortened statutory period expiring on February 25, 2010. This paper is a resubmission of Applicants' September 18, 2009 Response to non-final *Office Action* dated March 18, 2008. The status identifier for Claims 65-68 now reflects "Previously Presented" and claims 65-68 are correctly numbered. Further examination and reconsideration are respectfully requested.

Ex. 1002 495/597

AMENDMENTS TO THE CLAIMS

1. (Previously Presented) A system for managing relationships between a first party and a second party comprising:

at least one processor;

memory coupled to said at least one processor;

said memory comprising a plurality of modules configured to manage distributor information;

said plurality of modules comprising a selling agreements module configured to generate a selling agreement;

said plurality of modules comprising a commission module configured to determine commission amounts associated with a sales transaction based on said selling agreement;

said plurality of modules comprising a licensing module configured to determine if a party associated with said sales transaction has a valid license to sell products associated with the sales transaction; and

said plurality of modules comprising a payment module for determining payment associated with said sales transaction to said party in accordance with (i) a determination of said commission amounts determined by said commission module and (ii) a determination by said licensing module of whether said party has a valid license to sell the products associated with said sales transaction.

2. (Original) The system of claim 2 wherein said licensing module is further configured to determine if a party associated with said sales transaction comprises a valid appointment.

3. (Original) The system of claim 1 wherein said plurality of modules further comprises a distributor administration module configured to manage information associated with a plurality of distributors.

4. (Original) The system of claim 1 wherein said selling agreement comprises compensation components.

Ex. 1002 496/597

5. (Original) The system of claim 4 wherein said selling agreement comprises document components.

6. (Original) The system of claim 5 wherein said selling agreements module configured to generate said selling agreement utilizes a configuration engine to determine which of said compensation components and said document components to include.

7. (Original) The method of claim 6 wherein said commission module accesses a commission engine to determine said commission amounts.

8. (Original) The system of claim 1 wherein said selling agreement comprises a binding contract between an institution having at least one product and a distributor.

9. (Original) The system of claim 8 wherein said institution comprises financial institution.

10. (Original) The system of claim 8 wherein said product comprise financial product.

11. (Original) The system of claim 10 wherein said financial product comprises life insurance.

12. (Previously Presented) A system for managing relationships between parties to a selling agreement, the system comprising:

a database source comprising a plurality of data objects representative of at least one distributing party, at least one selling agreement, and at least one license or appointment associated with said at least one distributing party; and

a distributor management engine configured to obtain at least one of said plurality of data objects from said database source and determine whether said at least one distributing party conforms with said at least one selling agreement and said at least one license or appointment is valid to allow the at least one distributing party to sell one or more products of the first party in accordance with the selling agreement.

13. (Original) The system of claim 12 further comprising:

a backbone coupled to said distributor management engine, said backbone configured to transport said at least one of said plurality of data objects.

14. (Original) The system of claim 12 further comprising:
an interface for obtaining a plurality of business rules defining relationships between an institution and said at least one distributing party.

15. (Original) The system of claim 13 further comprising:
a commission engine configured to utilize said backbone to fetch said at least one selling agreement from said database source.

16. (Original) The system of claim 15 wherein said commission engine generates commission schemes utilized to model a set of selling agreement objects.

17. (Original) The system of claim 16 wherein said distributor management engine generates payments based on said selling agreement objects.

18. (Original) The system of claim 12 further comprising:
a workflow process engine configured to process workflow events.

19. (Original) The system of claim 18 wherein said workflow process events are determined by business rules defined by a user.

20. (Original) The system of claim 19 further comprising:
a commerce configuration engine configured to provide a configuration engine access to said business rules.

21. (Original) The system of claim 12 further comprising:
a report engine configured to generate a plurality of reports associated with said at least one distributing party.

22. (Original) The system of claim 21 wherein said report engine utilizes report templates to generate said plurality of reports.

23. (Original) The system of claim 12 further comprising:

a distributor administration module for managing said plurality of data objects.

24. (Previously Presented) The system of claim 12 further comprising:

a licensing and appointment module configured to enable the first party to manage said at least one license or appointments data object for at least one said distributor.

25. (Original) The system of claim 24 wherein said licensing and appointment module is configured to validate license or appointment compliance with a set of industry regulations by evaluating said at least one license or appointment data object.

26. (Original) The system of claim 12 further comprising:

a selling agreements module configured to enable said institution to define and create a business contract with said at least one distributing party.

27. (Original) The system of claim 26 wherein said selling agreements module manages a set of business rules governing how contract components are combined into said at least one selling agreement associated with each of said at least one distributing party.

28. (Original) The system of claim 27 further comprising:

a debt management module configured to enable said institution to manage distributor advances and repayments.

29. (Original) The system of claim 28 wherein said debt management module is utilized to define and manage a set of payment rules defining parameters for paying said at least one distributing party.

30. (Original) The system of claim 12 further comprising:

a net pay module enabling said institution to track and calculate payments to distributors.

31. (Original) The system of claim 12 wherein said institution comprises a financial services institution.

32. (Previously Presented) A system for managing relationships between a first party and a second party comprising:

an interface for obtaining a plurality of business rules defining relationships between a product provider and at least one distributor;

a database source comprising a plurality of data objects representative of said at least one distributor, at least one selling agreement and at least one license or appointment associated with said at least one distributor;

a commission engine configured to determine a commission amount associated with said at least one distributor by evaluating said at least one selling agreement data object;

a plurality of modules comprising, a distributor administration module for managing said plurality of data objects;

said plurality of modules comprising, a licensing and appointment module configured to determine if said at least one license or appointment data object associated with said at least one distributor is in compliance with a set of industry regulations;

said plurality of modules comprising, a selling agreements module configured to enable said product provider to define and create a selling agreement with said at least one distributor; and

said plurality of modules comprising, a payment module configured to determine said commission amount to said at least one distributor.

33. (Original) The system of claim 32 wherein said commission engine utilizes said backbone to fetch said at least one selling agreement from said database source.

34. (Original) The system of claim 32 further comprising:

a workflow process engine configured to process workflow events, said workflow process events determined by said business rules.

35. (Original) The system of claim 32 further comprising:

a commerce configuration engine configured to provide access to said business rules.

36. (Original) The system of claim 32 further comprising:

a report engine configured to generate a plurality of reports associated with said at least one distributor.

37. (Original) The system of claim 36 wherein said report engine utilizes report templates to generate said plurality of reports.

38. (Previously Presented) The system of claim 32 wherein said selling agreement comprises a contract between said product provider and said at least one distributor.

39. (Original) The system of claim 38 wherein said selling agreements module manages a set of business rules governing how contract components are combined into said at least one selling agreement associated with each of said at least one distributors.

40. (Previously Presented) The system of claim 32 further comprising:

a debt management module configured to enable said product provider to manage distributor advances and repayments.

41. (Original) The system of claim 28 wherein said debt management module is utilized to define and manage a set of payment rules defining parameters for paying said at least one distributor.

42. (Previously Presented) The system of claim 12 wherein said first party comprises a financial services institution.

43-64. (Canceled).

65. (Previously Presented) The system of claim 12 further comprising a payment module for determining payment to said at least one distributing party in association with a sales of the one or more products in accordance with (i) a determination of commission amounts in accordance with the at least one selling agreement and (ii) a determination of whether said at least one distributing party has a valid license to sell the one or more products associated with said sales transaction.

66. (Previously Presented) The system of claim 32 further comprising a backbone coupled to said distributor management engine to transport said at least one of said plurality of data objects to the plurality of modules.

67. (Previously Presented) The system of claim 32 wherein the payment module is further configured to determine payment to said at least one distributor in association with a sales of one or more products of said product provider in accordance with (i) a determination of commission amounts in accordance with the at least one selling agreement and (ii) a determination of whether said at least one distributor has a valid license to sell the one or more products associated with said sales transaction.

68. (Previously Presented) The system of claim 32 wherein said product provider comprises a financial services institution.

REMARKS

Claims 1-42 and 65-68 are pending.

Claims 1-42 and 65-68 stand rejected.

Claims 43-64 have been cancelled without prejudice or disclaimer of the subject matter recited therein.

Applicants' Submission in a Request for Continued Examination on February 6, 2009 included four (4) new claims, 65, 66, 67, and 68. Applicants' subsequent Response to Non-Final Office Action filed on September 18, 2009 ("September 18, 2009 Response") included corresponding claims 65, 66, 66, and 67 and accidentally renumbered claims 67 and 68 as "66" and "67", respectively, and accidentally identified claims 65, 66, 66, and 67 as "New" rather than as "Previously Presented".

Applicants have corrected these matters in this resubmitted Response by:

(1) properly numbering claims 65, 66, 67, and 68 to correspond to their original filing numbers of February 6, 2009, and

(2) properly identifying claims 65, 66, 67, and 68 as "Previously Presented".

The remainder of this Response is resubmitted in identical form as contained in Applicants' September 18, 2009 Response except that the reference to claims "65-67" in the September 18, 2009 Response has been changed to "65-68".

Claim Rejections - 35 U.S.C. § 103

Claims 1-42 stand rejected under 35 U.S.C. § 103(a) as being unpatentable over U.S. Patent No. 6,782,369 to Carrott (hereinafter "*Carrott*") in view of U.S. Publication No. 20010032094 to Ghosh (hereinafter "*Ghosh*") and U.S. Patent No. 7,200,749 to Wheeler et al. (hereinafter "*Wheeler*"). Applicants respectfully traverse the rejection.

For at least the reasons submitted below, Applicants respectfully submit that claims 1-42 and claims 65-68 are allowable over *Carrott* in view of *Ghosh* and *Wheeler*.

Carrott teaches a "computer system and method of allocating commissions for sales made over the Internet and for dividing an otherwise indivisible Internet into defined geographic areas." *Carrott*, Abstract. The computers system and method of *Carrott* more specifically teach "recording sales to exclusive geographic distribution/representation areas placed through an Internet web site", "determining a value of [the] sales to each of [the] geographic distribution/representation areas", and "allocating commissions based solely on [the] value of [the] sales delivered to each of [the] geographic distribution/representation areas." *Id.*, claim 1.

Ghosh teaches "providing a centralized updated and current database that tracks all relevant information related to licensing of agents and agencies." *Ghosh*, para. 0013. "The present invention further provides agents with information relative to their license status, and requirements for maintaining their certification." *Id.* *Ghosh* teaches a system that "provides a licensing information system that can be used for tracking and maintaining all relevant information regarding a particular individual and their licensing status in addition to relevant information regarding different commercial insurance organizations." *Id.*, para. 0014. *Ghosh* also teaches that the system "has unique and extensive reporting capabilities that facilitate a display of information in a user friendly manner" such as "for state reporting requirements." *Id.*, paras. 0016 and 0049.

Wheeler has a 35 U.S.C. § 371 filing date of December 20, 2002, a PCT filing date of Aug. 6, 2001, and claims priority to U.S. Provisional Application No. 60/223,076 filed on August 4, 2000 (hereinafter "*Wheeler Provisional*"). The present application has a filing date of March 15, 2001. *Wheeler* is only prior art under 35 U.S.C. § 102(e) to the extent that all the subject matter relied upon for the rejection is found in both *Wheeler* and *Wheeler Provisional*. See, *Ex parte Yamaguchi*, No. 2007-4412 (B.P.A.I. August 29, 2008). Thus, since *Wheeler* cannot be prior art for teachings not found in *Wheeler Provisional*, Applicants will discuss the rejection in view of *Wheeler Provisional*.

The *Wheeler Provisional* is generally directed towards an Account Authority Digital Signature (AADS) infrastructure. "AADS is [a] straight-forward upgrade to all exiting shared-secret authentication business processes (upgrade from shared secret to digital signature using existing business processes." *Wheeler Provisional*, Exhibit 1, page 1. *Wheeler Provisional* teaches that "one of the inhibitors to the deployment of high integrity business processes has been the lack

of [a] strong authentication infrastructure (a chain is no stronger than its weakest link)." *Id.*, Exhibit 2, page 11. "Account Authority Digital Signature is a practical application of digital signatures for strong authentication which is opening up practical high integrity business processes." *Id*, pages 11-12. *Wheeler Provisional* describes a system for authenticating digital signatures.

Assuming, without admitting, that the combination of *Carrott*, *Ghosh*, and *Wheeler Provisional* is appropriate, Applicants respectfully submit that *Carrott* in view of *Ghosh* and *Wheeler Provisional* fail to teach or suggest the present invention and fail to achieve the purpose of the present invention.

Claim 1.

The combination of *Carrott*, *Ghosh*, and *Wheeler Provisional* results in a system and method that provides commissions to a distributor, store and retrieves licensing information about the distributor, generates reports regarding, for example, state licensing requirements, and authenticates digital signatures. *Wheeler* is cited in the Office Action as disclosing "electronic communications for an electronic contract." Office Action, p. 2. "The contract of *Wheeler* is disclosed as being valid." *Id*. However, *Wheeler Provisional* is clearly directed towards authenticating digital signatures. The contract would be valid because the digital signature is valid. However, simply having a valid contract with an authenticated digital signal does **not** supply the teaching missing from *Carrott* and *Ghosh*, namely, determining whether or not a distributor has a valid license "to sell products associated with [a] sales transaction" to obtain a commission for the sales transaction. Claim 1. The combination of simply tracking a sale to a distributor, managing the distributor's licensing information as taught by the combination of *Carrott* and *Ghosh*, and authenticating digital signatures as taught by *Wheeler Provisional* does not in and of itself determine whether or not a distributor has a valid license "to sell products associated with [a] sales transaction" to obtain a commission for the sales transaction. Claim 1. The combination of *Carrott*, *Ghosh*, and *Wheeler Provisional* still suffers from deficiencies identified in the Background of the Present Application.

Thus, contrary to the combination of *Carrott*, *Ghosh*, and *Wheeler Provisional* , to determine whether a distributor has a valid license, in addition to merely obtaining licensing

information, the system must also determine, for example, "if a party associated with said sales transaction has a valid license to sell products associated with the sales transaction**."** *Carrott* in combination with *Ghosh* and *Wheeler Provisional* ("*Carrott/Ghosh/Wheeler Provisional combination"*) fail to teach or suggest how to apply the licensing information to a distributor and authenticating a digital signature in *Wheeler Provisional* does not provide the missing teaching. Although the open ended language of the claims of the present application do not prevent using authenticated digital signatures, in contrast to the *Carrott/Ghosh/Wheeler Provisional combination*, Claim 1 recites "a licensing module **configured to determine if a party associated with said sales transaction has a valid license to sell products** associated with the sales transaction" and "a payment module **for determining payment associated with said sales transaction to said party in accordance** with (i) a determination of said commission amounts determined by said commission module and (ii) **a determination by said licensing module of whether said party has a valid license to sell the products associated with said sales transaction**."

Thus, the combination of *Carrott* in view of *Ghosh* and *Wheeler Provisional* is missing elements of Claim 1 and, therefore, cannot teach or suggest the present invention of claim 1.

In summary, Applicants respectfully submit that *Carrott* in combination with *Ghosh* and *Wheeler Provisional* only relevantly teach determining commissions for distributors on a geographic basis, obtaining licensing information, and authenticating digital signatures. Since, (1) the *Carrott/Ghosh/Wheeler Provisional combination* fails to teach or suggest "a licensing module configured to determine if a party associated with said sales transaction has a valid license to sell products associated with the sales transaction", (2) fails to teach "a payment module for determining payment associated with said sales transaction to said party in accordance with (i) a determination of said commission amounts determined by said commission module and (ii) a determination by said licensing module of whether said party has a valid license to sell the products associated with said sales transaction", and (3) use of hindsight in view of the present application is impermissible, the present invention of Claim 1 is allowable over the *Carrott/Ghosh/Wheeler Provisional combination*.

Claim 12.

Applicants also respectfully submit that independent Claim 12 is allowable. Applicants respectfully submit that the **Office Action provides no support for rejecting Claim 12.**

Applicants respectfully submit that the *Carrott/Ghosh/Wheeler Provisional combination* teaches determining commissions for distributors on a geographic basis, obtaining licensing information, and authenticating digital signatures. However, Applicants respectfully submit that the *Carrott/Ghosh/Wheeler Provisional combination* neither teaches nor suggests "a distributor management engine configured to obtain at least one of said plurality of data objects from said database source and **determine whether said at least one distributing party conforms with said at least one selling agreement and said at least one license or appointment is valid** to allow the at least one distributing party to sell one or more products of the first party in accordance with the selling agreement."

Claim 32.

Applicants also respectfully submit that independent Claim 32 is allowable. Applicants respectfully submit that the **Office Action provides no support for rejecting Claim 32.**

Applicants respectfully submit that the *Carrott/Ghosh/Wheeler Provisional combination* teaches determining commissions for distributors on a geographic basis, obtaining licensing information, and authenticating digital signatures. However, Applicants respectfully submit that the *Carrott/Ghosh/Wheeler Provisional combination* neither teaches nor suggests "a licensing and appointment module **configured to determine if said at least one license or appointment data object associated with said at least one distributor is in compliance with a set of industry regulations**."

For at least the foregoing reasons, Applicants respectfully request withdrawal of the rejection of claims 1, 12, and 32 and claims directly or indirectly dependent therefrom.

CONCLUSION

In view of the amendments and remarks set forth herein, the application is believed to be in condition for allowance and a notice to that effect is solicited. Nonetheless, should any issues

remain that might be subject to resolution through a telephonic interview, the examiner is requested to telephone the undersigned at 512-338-9100.

CERTIFICATE OF TRANSMISSION

I hereby certify that on February 25, 2010, this correspondence is being transmitted via the U.S. Patent & Trademark Office's electronic filing system.

/Kent B. Chambers/

Respectfully submitted,

/Kent B. Chambers/

Kent B. Chambers
Attorney for Applicant(s)
Reg. No. 38,839

Ex. 1002 508/597

Electronic Acknowledgement Receipt

EFS ID:	7089174
Application Number:	09810514
International Application Number:	
Confirmation Number:	6193
Title of Invention:	Method and system for managing distributor information
First Named Inventor/Applicant Name:	David Chao
Customer Number:	33438
Filer:	Kent Bryan Chambers/Terri Munoz
Filer Authorized By:	Kent Bryan Chambers
Attorney Docket Number:	T00071
Receipt Date:	25-FEB-2010
Filing Date:	15-MAR-2001
Time Stamp:	15:52:52
Application Type:	Utility under 35 USC 111(a)

Payment information:

Submitted with Payment	no

File Listing:

Document Number	Document Description	File Name	File Size(Bytes)/ Message Digest	Multi Part /.zip	Pages (if appl.)
1	Supplemental Response or Supplemental Amendment	T00071_Resubmit_02_25_10_of_ROA_03_18_09.pdf	148283 b44d4fa4f57a27b99e9fdc16fd6e9a070f178dc5	no	14

Warnings:	
Information:	

Total Files Size (in bytes):	148283

This Acknowledgement Receipt evidences receipt on the noted date by the USPTO of the indicated documents, characterized by the applicant, and including page counts, where applicable. It serves as evidence of receipt similar to a Post Card, as described in MPEP 503.

New Applications Under 35 U.S.C. 111

If a new application is being filed and the application includes the necessary components for a filing date (see 37 CFR 1.53(b)-(d) and MPEP 506), a Filing Receipt (37 CFR 1.54) will be issued in due course and the date shown on this Acknowledgement Receipt will establish the filing date of the application.

National Stage of an International Application under 35 U.S.C. 371

If a timely submission to enter the national stage of an international application is compliant with the conditions of 35 U.S.C. 371 and other applicable requirements a Form PCT/DO/EO/903 indicating acceptance of the application as a national stage submission under 35 U.S.C. 371 will be issued in addition to the Filing Receipt, in due course.

New International Application Filed with the USPTO as a Receiving Office

If a new international application is being filed and the international application includes the necessary components for an international filing date (see PCT Article 11 and MPEP 1810), a Notification of the International Application Number and of the International Filing Date (Form PCT/RO/105) will be issued in due course, subject to prescriptions concerning national security, and the date shown on this Acknowledgement Receipt will establish the international filing date of the application.

PTO/SB/06 (07-06)
Approved for use through 1/31/2007. OMB 0651-0032
U.S. Patent and Trademark Office; U.S. DEPARTMENT OF COMMERCE
Under the Paperwork Reduction Act of 1995, no persons are required to respond to a collection of information unless it displays a valid OMB control number.

PATENT APPLICATION FEE DETERMINATION RECORD

Substitute for Form PTO-875

Application or Docket Number	Filing Date	☐ To be Mailed
09/810,514	03/15/2001	

APPLICATION AS FILED – PART I

FOR	(Column 1) NUMBER FILED	(Column 2) NUMBER EXTRA	SMALL ENTITY RATE ($)	SMALL ENTITY FEE ($)	OR	OTHER THAN SMALL ENTITY RATE ($)	OTHER THAN SMALL ENTITY FEE ($)
☒ BASIC FEE (37 CFR 1.16(a), (b), or (c))	N/A	N/A	N/A			N/A	710
☐ SEARCH FEE (37 CFR 1.16(k), (i), or (m))	N/A	N/A	N/A			N/A	
☐ EXAMINATION FEE (37 CFR 1.16(o), (p), or (q))	N/A	N/A	N/A			N/A	
TOTAL CLAIMS (37 CFR 1.16(i))	minus 20 =	*	X $ =		OR	X $ =	
INDEPENDENT CLAIMS (37 CFR 1.16(h))	minus 3 =	*	X $ =			X $ =	
☐ APPLICATION SIZE FEE (37 CFR 1.16(s))	If the specification and drawings exceed 100 sheets of paper, the application size fee due is $250 ($125 for small entity) for each additional 50 sheets or fraction thereof. See 35 U.S.C. 41(a)(1)(G) and 37 CFR 1.16(s).						
☐ MULTIPLE DEPENDENT CLAIM PRESENT (37 CFR 1.16(j))							
* If the difference in column 1 is less than zero, enter "0" in column 2.			TOTAL			TOTAL	710

APPLICATION AS AMENDED – PART II

AMENDMENT 02/25/2010

	(Column 1) CLAIMS REMAINING AFTER AMENDMENT		(Column 2) HIGHEST NUMBER PREVIOUSLY PAID FOR	(Column 3) PRESENT EXTRA	SMALL ENTITY RATE ($)	SMALL ENTITY ADDITIONAL FEE ($)	OR	OTHER THAN SMALL ENTITY RATE ($)	OTHER THAN SMALL ENTITY ADDITIONAL FEE ($)
Total (37 CFR 1.16(i))	* 46	Minus	** 64	= 0	X $ =		OR	X $52=	0
Independent (37 CFR 1.16(h))	* 3	Minus	***5	= 0	X $ =		OR	X $220=	0
☐ Application Size Fee (37 CFR 1.16(s))									
☐ FIRST PRESENTATION OF MULTIPLE DEPENDENT CLAIM (37 CFR 1.16(j))							OR		
					TOTAL ADD'L FEE		OR	TOTAL ADD'L FEE	0

AMENDMENT

	(Column 1) CLAIMS REMAINING AFTER AMENDMENT		(Column 2) HIGHEST NUMBER PREVIOUSLY PAID FOR	(Column 3) PRESENT EXTRA	RATE ($)	ADDITIONAL FEE ($)		RATE ($)	ADDITIONAL FEE ($)
Total (37 CFR 1.16(i))	*	Minus	**	=	X $ =		OR	X $ =	
Independent (37 CFR 1.16(h))	*	Minus	***	=	X $ =		OR	X $ =	
☐ Application Size Fee (37 CFR 1.16(s))									
☐ FIRST PRESENTATION OF MULTIPLE DEPENDENT CLAIM (37 CFR 1.16(j))							OR		
					TOTAL ADD'L FEE		OR	TOTAL ADD'L FEE	

* If the entry in column 1 is less than the entry in column 2, write "0" in column 3.

** If the "Highest Number Previously Paid For" IN THIS SPACE is less than 20, enter "20".

*** If the "Highest Number Previously Paid For" IN THIS SPACE is less than 3, enter "3".

The "Highest Number Previously Paid For" (Total or Independent) is the highest number found in the appropriate box in column 1.

Legal Instrument Examiner:
/GLORIA TRAMMELL/

This collection of information is required by 37 CFR 1.16. The information is required to obtain or retain a benefit by the public which is to file (and by the USPTO to process) an application. Confidentiality is governed by 35 U.S.C. 122 and 37 CFR 1.14. This collection is estimated to take 12 minutes to complete, including gathering, preparing, and submitting the completed application form to the USPTO. Time will vary depending upon the individual case. Any comments on the amount of time you require to complete this form and/or suggestions for reducing this burden, should be sent to the Chief Information Officer, U.S. Patent and Trademark Office, U.S. Department of Commerce, P.O. Box 1450, Alexandria, VA 22313-1450. DO NOT SEND FEES OR COMPLETED FORMS TO THIS ADDRESS. **SEND TO: Commissioner for Patents, P.O. Box 1450, Alexandria, VA 22313-1450.**

If you need assistance in completing the form, call 1-800-PTO-9199 and select option 2.

UNITED STATES PATENT AND TRADEMARK OFFICE

UNITED STATES DEPARTMENT OF COMMERCE
United States Patent and Trademark Office
Address: COMMISSIONER FOR PATENTS
P.O. Box 1450
Alexandria, Virginia 22313-1450
www.uspto.gov

NOTICE OF ALLOWANCE AND FEE(S) DUE

33438 7590 06/03/2010

HAMILTON & TERRILE, LLP
P.O. BOX 203518
AUSTIN, TX 78720

EXAMINER	
RUDY, ANDREW J	
ART UNIT	PAPER NUMBER
3687	

DATE MAILED: 06/03/2010

APPLICATION NO.	FILING DATE	FIRST NAMED INVENTOR	ATTORNEY DOCKET NO.	CONFIRMATION NO.
09/810,514	03/15/2001	David Chao	T00071	6193

TITLE OF INVENTION: METHOD AND SYSTEM FOR MANAGING DISTRIBUTOR INFORMATION

APPLN. TYPE	SMALL ENTITY	ISSUE FEE DUE	PUBLICATION FEE DUE	PREV. PAID ISSUE FEE	TOTAL FEE(S) DUE	DATE DUE
nonprovisional	NO	$1510	$300	$0	$1810	09/03/2010

THE APPLICATION IDENTIFIED ABOVE HAS BEEN EXAMINED AND IS ALLOWED FOR ISSUANCE AS A PATENT. PROSECUTION ON THE MERITS IS CLOSED. THIS NOTICE OF ALLOWANCE IS NOT A GRANT OF PATENT RIGHTS. THIS APPLICATION IS SUBJECT TO WITHDRAWAL FROM ISSUE AT THE INITIATIVE OF THE OFFICE OR UPON PETITION BY THE APPLICANT. SEE 37 CFR 1.313 AND MPEP 1308.

THE ISSUE FEE AND PUBLICATION FEE (IF REQUIRED) MUST BE PAID WITHIN THREE MONTHS FROM THE MAILING DATE OF THIS NOTICE OR THIS APPLICATION SHALL BE REGARDED AS ABANDONED. THIS STATUTORY PERIOD CANNOT BE EXTENDED. SEE 35 U.S.C. 151. THE ISSUE FEE DUE INDICATED ABOVE DOES NOT REFLECT A CREDIT FOR ANY PREVIOUSLY PAID ISSUE FEE IN THIS APPLICATION. IF AN ISSUE FEE HAS PREVIOUSLY BEEN PAID IN THIS APPLICATION (AS SHOWN ABOVE), THE RETURN OF PART B OF THIS FORM WILL BE CONSIDERED A REQUEST TO REAPPLY THE PREVIOUSLY PAID ISSUE FEE TOWARD THE ISSUE FEE NOW DUE.

HOW TO REPLY TO THIS NOTICE:

I. Review the SMALL ENTITY status shown above.

If the SMALL ENTITY is shown as YES, verify your current SMALL ENTITY status:

A. If the status is the same, pay the TOTAL FEE(S) DUE shown above.

B. If the status above is to be removed, check box 5b on Part B - Fee(s) Transmittal and pay the PUBLICATION FEE (if required) and twice the amount of the ISSUE FEE shown above, or

If the SMALL ENTITY is shown as NO:

A. Pay TOTAL FEE(S) DUE shown above, or

B. If applicant claimed SMALL ENTITY status before, or is now claiming SMALL ENTITY status, check box 5a on Part B - Fee(s) Transmittal and pay the PUBLICATION FEE (if required) and 1/2 the ISSUE FEE shown above.

II. PART B - FEE(S) TRANSMITTAL, or its equivalent, must be completed and returned to the United States Patent and Trademark Office (USPTO) with your ISSUE FEE and PUBLICATION FEE (if required). If you are charging the fee(s) to your deposit account, section "4b" of Part B - Fee(s) Transmittal should be completed and an extra copy of the form should be submitted. If an equivalent of Part B is filed, a request to reapply a previously paid issue fee must be clearly made, and delays in processing may occur due to the difficulty in recognizing the paper as an equivalent of Part B.

III. All communications regarding this application must give the application number. Please direct all communications prior to issuance to Mail Stop ISSUE FEE unless advised to the contrary.

IMPORTANT REMINDER: Utility patents issuing on applications filed on or after Dec. 12, 1980 may require payment of maintenance fees. It is patentee's responsibility to ensure timely payment of maintenance fees when due.

EX. 1002 512/597

PART B - FEE(S) TRANSMITTAL

Complete and send this form, together with applicable fee(s), to: Mail **Mail Stop ISSUE FEE**
Commissioner for Patents
P.O. Box 1450
Alexandria, Virginia 22313-1450
or Fax (571)-273-2885

INSTRUCTIONS: This form should be used for transmitting the ISSUE FEE and PUBLICATION FEE (if required). Blocks 1 through 5 should be completed where appropriate. All further correspondence including the Patent, advance orders and notification of maintenance fees will be mailed to the current correspondence address as indicated unless corrected below or directed otherwise in Block 1, by (a) specifying a new correspondence address; and/or (b) indicating a separate "FEE ADDRESS" for maintenance fee notifications.

CURRENT CORRESPONDENCE ADDRESS (Note: Use Block 1 for any change of address)

33438 7590 06/03/2010

HAMILTON & TERRILE, LLP
P.O. BOX 203518
AUSTIN, TX 78720

Note: A certificate of mailing can only be used for domestic mailings of the Fee(s) Transmittal. This certificate cannot be used for any other accompanying papers. Each additional paper, such as an assignment or formal drawing, must have its own certificate of mailing or transmission.

Certificate of Mailing or Transmission

I hereby certify that this Fee(s) Transmittal is being deposited with the United States Postal Service with sufficient postage for first class mail in an envelope addressed to the Mail Stop ISSUE FEE address above, or being facsimile transmitted to the USPTO (571) 273-2885, on the date indicated below.

(Depositor's name)
(Signature)
(Date)

APPLICATION NO.	FILING DATE	FIRST NAMED INVENTOR	ATTORNEY DOCKET NO.	CONFIRMATION NO.
09/810,514	03/15/2001	David Chao	T00071	6193

TITLE OF INVENTION: METHOD AND SYSTEM FOR MANAGING DISTRIBUTOR INFORMATION

APPLN. TYPE	SMALL ENTITY	ISSUE FEE DUE	PUBLICATION FEE DUE	PREV. PAID ISSUE FEE	TOTAL FEE(S) DUE	DATE DUE
nonprovisional	NO	$1510	$300	$0	$1810	09/03/2010

EXAMINER	ART UNIT	CLASS-SUBCLASS
RUDY, ANDREW J	3687	705-007000

1. Change of correspondence address or indication of "Fee Address" (37 CFR 1.363).

❑ Change of correspondence address (or Change of Correspondence Address form PTO/SB/122) attached.

❑ "Fee Address" indication (or "Fee Address" Indication form PTO/SB/47; Rev 03-02 or more recent) attached. **Use of a Customer Number is required.**

2. For printing on the patent front page, list

(1) the names of up to 3 registered patent attorneys or agents OR, alternatively,

(2) the name of a single firm (having as a member a registered attorney or agent) and the names of up to 2 registered patent attorneys or agents. If no name is listed, no name will be printed.

1 _____

2 _____

3 _____

3. ASSIGNEE NAME AND RESIDENCE DATA TO BE PRINTED ON THE PATENT (print or type)

PLEASE NOTE: Unless an assignee is identified below, no assignee data will appear on the patent. If an assignee is identified below, the document has been filed for recordation as set forth in 37 CFR 3.11. Completion of this form is NOT a substitute for filing an assignment.

(A) NAME OF ASSIGNEE (B) RESIDENCE: (CITY and STATE OR COUNTRY)

Please check the appropriate assignee category or categories (will not be printed on the patent) : ❑ Individual ❑ Corporation or other private group entity ❑ Government

4a. The following fee(s) are submitted:

❑ Issue Fee

❑ Publication Fee (No small entity discount permitted)

❑ Advance Order - # of Copies _____

4b. Payment of Fee(s): **(Please first reapply any previously paid issue fee shown above)**

❑ A check is enclosed.

❑ Payment by credit card. Form PTO-2038 is attached.

❑ The Director is hereby authorized to charge the required fee(s), any deficiency, or credit any overpayment, to Deposit Account Number _____ (enclose an extra copy of this form).

5. **Change in Entity Status** (from status indicated above)

❑ a. Applicant claims SMALL ENTITY status. See 37 CFR 1.27.

❑ b. Applicant is no longer claiming SMALL ENTITY status. See 37 CFR 1.27(g)(2).

NOTE: The Issue Fee and Publication Fee (if required) will not be accepted from anyone other than the applicant; a registered attorney or agent; or the assignee or other party in interest as shown by the records of the United States Patent and Trademark Office.

Authorized Signature _____ Date _____

Typed or printed name _____ Registration No. _____

This collection of information is required by 37 CFR 1.311. The information is required to obtain or retain a benefit by the public which is to file (and by the USPTO to process) an application. Confidentiality is governed by 35 U.S.C. 122 and 37 CFR 1.14. This collection is estimated to take 12 minutes to complete, including gathering, preparing, and submitting the completed application form to the USPTO. Time will vary depending upon the individual case. Any comments on the amount of time you require to complete this form and/or suggestions for reducing this burden, should be sent to the Chief Information Officer, U.S. Patent and Trademark Office, U.S. Department of Commerce, P.O. Box 1450, Alexandria, Virginia 22313-1450. DO NOT SEND FEES OR COMPLETED FORMS TO THIS ADDRESS. SEND TO: Commissioner for Patents, P.O. Box 1450, Alexandria, Virginia 22313-1450.

Under the Paperwork Reduction Act of 1995, no persons are required to respond to a collection of information unless it displays a valid OMB control number.

UNITED STATES PATENT AND TRADEMARK OFFICE

UNITED STATES DEPARTMENT OF COMMERCE
United States Patent and Trademark Office
Address: COMMISSIONER FOR PATENTS
P.O. Box 1450
Alexandria, Virginia 22313-1450
www.uspto.gov

APPLICATION NO.	FILING DATE	FIRST NAMED INVENTOR	ATTORNEY DOCKET NO.	CONFIRMATION NO.
09/810,514	03/15/2001	David Chao	T00071	6193

33438 7590 06/03/2010

HAMILTON & TERRILE, LLP
P.O. BOX 203518
AUSTIN, TX 78720

EXAMINER	
RUDY, ANDREW J	
ART UNIT	PAPER NUMBER
3687	

DATE MAILED: 06/03/2010

Determination of Patent Term Adjustment under 35 U.S.C. 154 (b)

(application filed on or after May 29, 2000)

The Patent Term Adjustment to date is 269 day(s). If the issue fee is paid on the date that is three months after the mailing date of this notice and the patent issues on the Tuesday before the date that is 28 weeks (six and a half months) after the mailing date of this notice, the Patent Term Adjustment will be 269 day(s).

If a Continued Prosecution Application (CPA) was filed in the above-identified application, the filing date that determines Patent Term Adjustment is the filing date of the most recent CPA.

Applicant will be able to obtain more detailed information by accessing the Patent Application Information Retrieval (PAIR) WEB site (http://pair.uspto.gov).

Any questions regarding the Patent Term Extension or Adjustment determination should be directed to the Office of Patent Legal Administration at (571)-272-7702. Questions relating to issue and publication fee payments should be directed to the Customer Service Center of the Office of Patent Publication at 1-(888)-786-0101 or (571)-272-4200.

Ex. 1002 514/597

Notice of Allowability	Application No.	Applicant(s)	
	09/810,514	CHAO ET AL.	
	Examiner	Art Unit	
	Andrew Joseph Rudy	3687	

-- The MAILING DATE of this communication appears on the cover sheet with the correspondence address--

All claims being allowable, PROSECUTION ON THE MERITS IS (OR REMAINS) CLOSED in this application. If not included herewith (or previously mailed), a Notice of Allowance (PTOL-85) or other appropriate communication will be mailed in due course. **THIS NOTICE OF ALLOWABILITY IS NOT A GRANT OF PATENT RIGHTS.** This application is subject to withdrawal from issue at the initiative of the Office or upon petition by the applicant. See 37 CFR 1.313 and MPEP 1308.

1. ☒ This communication is responsive to *the 25 February 2010 Amendment*.

2. ☒ The allowed claim(s) is/are *1-42 and 65-68*.

3. ☐ Acknowledgment is made of a claim for foreign priority under 35 U.S.C. § 119(a)-(d) or (f).
   a) ☐ All b) ☐ Some* c) ☐ None of the:
      1. ☐ Certified copies of the priority documents have been received.
      2. ☐ Certified copies of the priority documents have been received in Application No. _____ .
      3. ☐ Copies of the certified copies of the priority documents have been received in this national stage application from the International Bureau (PCT Rule 17.2(a)).

   * Certified copies not received: _____.

Applicant has THREE MONTHS FROM THE "MAILING DATE" of this communication to file a reply complying with the requirements noted below. Failure to timely comply will result in ABANDONMENT of this application.
THIS THREE-MONTH PERIOD IS NOT EXTENDABLE.

4. ☐ A SUBSTITUTE OATH OR DECLARATION must be submitted. Note the attached EXAMINER'S AMENDMENT or NOTICE OF INFORMAL PATENT APPLICATION (PTO-152) which gives reason(s) why the oath or declaration is deficient.

5. ☐ CORRECTED DRAWINGS (as "replacement sheets") must be submitted.
   (a) ☐ including changes required by the Notice of Draftsperson's Patent Drawing Review (PTO-948) attached
      1) ☐ hereto or 2) ☐ to Paper No./Mail Date _____.
   (b) ☐ including changes required by the attached Examiner's Amendment / Comment or in the Office action of Paper No./Mail Date _____.

   Identifying indicia such as the application number (see 37 CFR 1.84(c)) should be written on the drawings in the front (not the back) of each sheet. Replacement sheet(s) should be labeled as such in the header according to 37 CFR 1.121(d).

6. ☐ DEPOSIT OF and/or INFORMATION about the deposit of BIOLOGICAL MATERIAL must be submitted. Note the attached Examiner's comment regarding REQUIREMENT FOR THE DEPOSIT OF BIOLOGICAL MATERIAL.

Attachment(s)

1. ☐ Notice of References Cited (PTO-892)
2. ☐ Notice of Draftperson's Patent Drawing Review (PTO-948)
3. ☒ Information Disclosure Statements (PTO/SB/08), Paper No./Mail Date _____
4. ☐ Examiner's Comment Regarding Requirement for Deposit of Biological Material
5. ☐ Notice of Informal Patent Application
6. ☐ Interview Summary (PTO-413), Paper No./Mail Date _____ .
7. ☒ Examiner's Amendment/Comment
8. ☐ Examiner's Statement of Reasons for Allowance
9. ☐ Other _____.

DETAILED ACTION

Allowable Subject Matter

1. Applicant's February 25, 2010 Request for Reconsideration has been reviewed. Applicant's REMARKS are convincing. Thus, claims 1-42 and 65-68 are allowed. Claims 43-64 were previously cancelled by Applicant.

2. Applicant's Information Disclosure Statement received May 21, 2009 has been reviewed. Note the attached IDS.

3. Any inquiry concerning this communication or earlier communications from the examiner should be directed to Andrew Joseph Rudy whose telephone number is 571-272-6789. The examiner can normally be reached on Monday thru Friday.

If attempts to reach the examiner by telephone are unsuccessful, the examiner's supervisor, Matthew S. Gart can be reached on 571-272-3955. The fax phone number for the organization where this application or proceeding is assigned is 571-273-8300.

Information regarding the status of an application may be obtained from the Patent Application Information Retrieval (PAIR) system. Status information for published applications may be obtained from either Private PAIR or Public PAIR. Status information for unpublished applications is available through Private PAIR only. For more information about the PAIR system, see http://pair-direct.uspto.gov. Should you have questions on access to the Private PAIR system, contact the Electronic

Business Center (EBC) at 866-217-9197 (toll-free). If you would like assistance from a USPTO Customer Service Representative or access to the automated information system, call 800-786-9199 (IN USA OR CANADA) or 571-272-1000.

/Andrew Joseph Rudy/
Primary Examiner, Art Unit 3687

Search Notes

Application/Control No.	Applicant(s)/Patent under Reexamination	
09/810,514	CHAO ET AL.	
Examiner	**Art Unit**	
Andrew Joseph Rudy	3687	

SEARCHED			
Class	Subclass	Date	Examiner
235	375,376	5/22/2010	AJR
705	7,10,26	5/22/2010	AJR
707	999.001	5/22/2010	AJR
707	999.009	5/22/2010	AJR
707	923,930	5/22/2010	AJR
707	944,945	5/22/2010	AJR
707	950	5/22/2010	AJR
711	1	5/22/2010	AJR

INTERFERENCE SEARCHED			
Class	Subclass	Date	Examiner
707	**945**	**5/22/2010**	**AJR**
705	7,10,26	5/22/2010	AJR
235	375,376	5/22/2010	AJR

SEARCH NOTES (INCLUDING SEARCH STRATEGY)		
	DATE	EXMR
Continuity data reviewed.	5/22/2010	AJR
Bibliographic data reviewed.	5/22/2010	AJR
Inventor name search conducted.	5/22/2010	AJR

Issue Classification	Application/Control No.	Applicant(s)/Patent under Reexamination	
	09/810,514	CHAO ET AL.	
	Examiner	Art Unit	
	Andrew Joseph Rudy	3687	

ISSUE CLASSIFICATION

ORIGINAL						CROSS REFERENCE(S)							
CLASS				SUBCLASS	CLASS	SUBCLASS (ONE SUBCLASS PER BLOCK)							
707				945	235	376							
INTERNATIONAL CLASSIFICATION					705	7							
G	0	6	F	17/30									
				/									
				/									
				/									
				/									

XXXXXXXXXXXXXXXXXXX (Assistant Examiner) (Date)	/Andrew Joseph Rudy/ 5/22/10 (Primary Examiner) (Date)	Total Claims Allowed: 46	
(Legal Instruments Examiner) (Date)		O.G. Print Claim(s): 1	O.G. Print Fig.: 1

☐ Claims renumbered in the same order as presented by applicant ☐ CPA ☐ T.D. ☐ R.1.47

Final	Original	Final	Original	Final	Original	Final	Original	Final	Original	Final	Original	Final	Original
1	1	31	31		61		91		121		151		181
2	2	32	32		62		92		122		152		182
3	3	33	33		63		93		123		153		183
4	4	34	34		64		94		124		154		184
5	5	35	35	43	65		95		125		155		185
6	6	36	36	44	66		96		126		156		186
7	7	37	37	45	67		97		127		157		187
8	8	38	38	46	68		98		128		158		188
9	9	39	39		69		99		129		159		189
10	10	40	40		70		100		130		160		190
11	11	41	41		71		101		131		161		191
12	12	42	42		72		102		132		162		192
13	13		43		73		103		133		163		193
14	14		44		74		104		134		164		194
15	15		45		75		105		135		165		195
16	16		46		76		106		136		166		196
17	17		47		77		107		137		167		197
18	18		48		78		108		138		168		198
19	19		49		79		109		139		169		199
20	20		50		80		110		140		170		200
21	21		51		81		111		141		171		201
22	22		52		82		112		142		172		202
23	23		53		83		113		143		173		203
24	24		54		84		114		144		174		204
25	25		55		85		115		145		175		205
26	26		56		86		116		146		176		206
27	27		57		87		117		147		177		207
28	28		58		88		118		148		178		208
29	29		59		89		119		149		179		209
30	30		60		90		120		150		180		210

Doc code: IDS
Doc description: Information Disclosure Statement (IDS) Filed

PTO/SB/08a (04-09)
Approved for use through 05/31/2009. OMB 0651-0031
U.S. Patent and Trademark Office; U.S. DEPARTMENT OF COMMERCE
Under the Paperwork Reduction Act of 1995, no persons are required to respond to a collection of information unless it contains a valid OMB control number.

INFORMATION DISCLOSURE STATEMENT BY APPLICANT

(Not for submission under 37 CFR 1.99)

Application Number	09810514
Filing Date	2001-03-21
First Named Inventor	David Chao
Art Unit	3687
Examiner Name	Andrew J. Rudy
Attorney Docket Number	T00071

U.S.PATENTS

Examiner Initial*	Cite No	Patent Number	Kind Code[1]	Issue Date	Name of Patentee or Applicant of cited Document	Pages,Columns,Lines where Relevant Passages or Relevant Figures Appear
	1					

If you wish to add additional U.S. Patent citation information please click the Add button.

U.S.PATENT APPLICATION PUBLICATIONS

Examiner Initial*	Cite No	Publication Number	Kind Code[1]	Publication Date	Name of Patentee or Applicant of cited Document	Pages,Columns,Lines where Relevant Passages or Relevant Figures Appear
/A.R./	1	20060206789		2006-09-14	Bakman et al.	

If you wish to add additional U.S. Published Application citation information please click the Add button.

FOREIGN PATENT DOCUMENTS

Examiner Initial*	Cite No	Foreign Document Number[3]	Country Code[2] i	Kind Code[4]	Publication Date	Name of Patentee or Applicant of cited Document	Pages,Columns,Lines where Relevant Passages or Relevant Figures Appear	T[5]
	1							☐

If you wish to add additional Foreign Patent Document citation information please click the Add button

NON-PATENT LITERATURE DOCUMENTS

Examiner Initials*	Cite No	Include name of the author (in CAPITAL LETTERS), title of the article (when appropriate), title of the item (book, magazine, journal, serial, symposium, catalog, etc), date, pages(s), volume-issue number(s), publisher, city and/or country where published.	T[5]

INFORMATION DISCLOSURE STATEMENT BY APPLICANT (Not for submission under 37 CFR 1.99)		
	Application Number	09810514
	Filing Date	2001-03-21
	First Named Inventor	David Chao
	Art Unit	3687
	Examiner Name	Andrew J. Rudy
	Attorney Docket Number	T00071

/A.R./	1	Protect Your Family From Lead In Your Home, May 1995, United States EPA, pgs. 1-16	☐

If you wish to add additional non-patent literature document citation information please click the Add button

EXAMINER SIGNATURE

Examiner Signature	/Andrew Joseph Rudy/	Date Considered	05/26/2010

*EXAMINER: Initial if reference considered, whether or not citation is in conformance with MPEP 609. Draw line through a citation if not in conformance and not considered. Include copy of this form with next communication to applicant.

[1] See Kind Codes of USPTO Patent Documents at www.USPTO.GOV or MPEP 901.04. [2] Enter office that issued the document, by the two-letter code (WIPO Standard ST.3). [3] For Japanese patent documents, the indication of the year of the reign of the Emperor must precede the serial number of the patent document. [4] Kind of document by the appropriate symbols as indicated on the document under WIPO Standard ST.16 if possible. [5] Applicant is to place a check mark here if English language translation is attached.

U.S. Department of Commerce, Patent and Trademark Office	Attorney Docket No.	Serial No.
	T00071	09/810,514
INFORMATION DISCLOSURE STATEMENT BY APPLICANT	Applicant(s)	
(Use several sheets if necessary)	David Chao, et al.	
	Filing Date	Group
	March 15, 2001	1792

O I P E
NOV 2 2 2004
PATENT & TRADEMARK OFFICE

U.S. Patent Documents

*Examiner Initial		Document Number	Date	Name	Class	Subclass	Filing Date If Appropriate
	AA	6,662,164	12/09/03	Koppelman et al.	705	14	
	AB	6,275,871	08/14/01	Reinfelder et al.	709	328	
	AC	5,483,444	01/09/96	Heintzeman et al.	364	401	
	AD	4,825,360	04/25/89	Knight, Jr.	364	200	
	AE						
	AF						
	AG						
	AH						
	AI						
	AJ						
	AK						

Foreign Patent Documents

							Translation	
		Document	Date	Country	Class	Subclass	Yes	No
	AL	EP 0817017 A2	01/1998	Europe	G06F	9/46	☐	☐
	AM						☐	☐
	AN						☐	☐
	AO							
	AP							

OTHER ART (Including Author, Title, Date, Pertinent Pages, Etc.)

	AR	Hansen, Hans Robert, "Wirtschaftsinformatik I," Lucius & Lucius
	AS	Trilogy-Volvo Master License Agreement, April 29, 1997.
	AT	U.S. Patent & Trademark Office, PALM Sample Printouts, published October 31, 1989

Examiner /Andrew Joseph Rudy/	Date Considered 05/29/2010

*EXAMINER: Initial if reference considered, whether or not citation is in conformance with MPEP 609; Draw line through citation if not in conformance and not considered. Include copy of this form with your communication to applicant.

ALL REFERENCES CONSIDERED EXCEPT WHERE LINED THROUGH. /A.R./

U.S. Department of Commerce, Patent and Trademark Office	Attorney Docket No.	Serial No.
	T00071	09/810,514
INFORMATION DISCLOSURE STATEMENT BY APPLICANT	Applicant(s)	
(Use several sheets if necessary)	David Chao, et al.	
	Filing Date	Group
	March 15, 2001	1792

OIPE JC151 NOV 2 2 2004 PATENT & TRADEMARK OFFICE

U.S. Patent Documents

*Examiner Initial		Document Number	Date	Name	Class	Subclass	Filing Date If Appropriate
	AA						
	AB						
	AC						
	AD						
	AE						
	AF						
	AG						
	AH						
	AI						
	AJ						
	AK						

Foreign Patent Documents

							Translation	
		Document	Date	Country	Class	Subclass	Yes	No
	AL						☐	☐
	AM						☐	☐
	AN						☐	☐
	AO							
	AP							

OTHER ART (Including Author, Title, Date, Pertinent Pages, Etc.)

	AR	U.S. Patent & Trademark Office, Examiner's Bi-Weekly Time Worksheet (FORM PTO 690E), 1995.
	AS	Martin, James, Principles of Object-Oriented Analysis and Design, Prentice Hall, 1993.
	AT	Patent Office Professional Association, Agreement between U.S. Department of Commerce/Patent and Trademark Office and the Patent Office Professional Association, pp. 39, 93, 94, 97-100, 1986.

Examiner /Andrew Joseph Rudy/	Date Considered 05/29/2010

*EXAMINER: Initial if reference considered, whether or not citation is in conformance with MPEP 609; Draw line through citation if not in conformance and not considered. Include copy of this form with your communication to applicant.

ALL REFERENCES CONSIDERED EXCEPT WHERE LINED THROUGH. /A.R./

U.S. Department of Commerce, Patent and Trademark Office	Attorney Docket No.	Serial No.
	T00071	09/810,514
INFORMATION DISCLOSURE STATEMENT BY APPLICANT	Applicant(s)	
(Use several sheets if necessary)	David Chao, et al.	
	Filing Date	Group
	March 15, 2001	1792

OIPE JC151
NOV 2 2 2004
PATENT & TRADEMARK OFFICE

U.S. Patent Documents

*Examiner Initial		Document Number	Date	Name	Class	Subclass	Filing Date If Appropriate
	AA						
	AB						
	AC						
	AD						
	AE						
	AF						
	AG						
	AH						
	AI						
	AJ						
	AK						

Foreign Patent Documents

							Translation	
		Document	Date	Country	Class	Subclass	Yes	No
	AL						☐	☐
	AM						☐	☐
	AN						☐	☐
	AO							
	AP							

OTHER ART (Including Author, Title, Date, Pertinent Pages, Etc.)

	AR	U.S. Patent and Trademark Office, Manual of Patent Program Procedure, published October 31, 1989
	AS	U.S. Patent and Trademark Office, PALM 3 User's Guide, published October 31, 1989.
	AT	

Examiner /Andrew Joseph Rudy/	Date Considered 05/29/2010

*EXAMINER: Initial if reference considered, whether or not citation is in conformance with MPEP 609; Draw line through citation if not in conformance and not considered. Include copy of this form with your communication to applicant.

ALL REFERENCES CONSIDERED EXCEPT WHERE LINED THROUGH. /A.R./

UNITED STATES PATENT AND TRADEMARK OFFICE

UNITED STATES DEPARTMENT OF COMMERCE
United States Patent and Trademark Office
Address: COMMISSIONER FOR PATENTS
P.O. Box 1450
Alexandria, Virginia 22313-1450
www.uspto.gov

APPLICATION NO.	FILING DATE	FIRST NAMED INVENTOR	ATTORNEY DOCKET NO.	CONFIRMATION NO.
09/810,514	03/15/2001	David Chao	T00071	6193

33438 7590 07/22/2010
HAMILTON & TERRILE, LLP
P.O. BOX 203518
AUSTIN, TX 78720

EXAMINER	
RUDY, ANDREW J	

ART UNIT	PAPER NUMBER
3687	

NOTIFICATION DATE	DELIVERY MODE
07/22/2010	ELECTRONIC

Please find below and/or attached an Office communication concerning this application or proceeding.

The time period for reply, if any, is set in the attached communication.

Notice of the Office communication was sent electronically on above-indicated "Notification Date" to the following e-mail address(es):

tmunoz@hamiltonterrile.com

UNITED STATES DEPARTMENT OF COMMERCE
U.S. Patent and Trademark Office
Address: COMMISSIONER FOR PATENTS
P.O. Box 1450
Alexandria, Virginia 22313-1450

APPLICATION NO./ CONTROL NO.	FILING DATE	FIRST NAMED INVENTOR / PATENT IN REEXAMINATION	ATTORNEY DOCKET NO.
09810514	3/15/2001	CHAO ET AL.	T00071

HAMILTON & TERRILE, LLP
P.O. BOX 203518
AUSTIN, TX 78720

EXAMINER
Andrew Joseph. Rudy

ART UNIT	PAPER
3687	20100719

DATE MAILED:

Please find below and/or attached an Office communication concerning this application or proceeding.

Commissioner for Patents

The Information Disclosure Statements (IDS's) submitted by Applicant on October 14, 2005; March 21, 2007; April 16, 2007; April 25, 2007 and January 26, 2009 were previously reviewed. Each IDS is enclosed with this communication.

/Andrew Joseph Rudy/
Primary Examiner, Art Unit 3687

PTO-90C (Rev.04-03)

U.S. Department of Commerce, Patent and Trademark Office	Attorney Docket No.	Serial No.
	T00071	09/810,514
INFORMATION DISCLOSURE STATEMENT BY APPLICANT	Applicant(s)	
(Use several sheets if necessary)	David Chao, et al.	
	Filing Date	Group
	March 15, 2001	3627

U.S. Patent Documents

*Examiner Initial		Document Number	Date	Name	Class	Subclass	Filing Date If Appropriate
	AA	7,133,845	11/2006	Ginter et al.	705	51	
	AB	7,089,315	08/2006	Nuttall Franc	709	229	
	AC	7,069,235	06/2006	Postelnik et al.	705	26	
	AD	6,999,946	02/2006	Nuttall, Franc	705	52	
	AE	6,889,206	05/2005	Nutall, Francois-Xavier	705	52	
	AF	6,510,513	01/2003	Danieli, Damon V.	713	156	
	AG	5,790,677	08/1998	Fox et al.	705	78	
	AH						
	AI						
	AJ						
	AK						

Foreign Patent Documents

							Translation	
		Document	Date	Country	Class	Subclass	Yes	No
	AL						☐	☐
	AM						☐	☐
	AN						☐	☐
	AO							
	AP							

OTHER ART (Including Author, Title, Date, Pertinent Pages, Etc.)

	AR	
	AS	
	AT	

Examiner /Andrew Joseph Rudy/	Date Considered 07/19/2010

*EXAMINER: Initial if reference considered, whether or not citation is in conformance with MPEP 609; Draw line through citation if not in conformance and not considered. Include copy of this form with your communication to applicant.

ALL REFERENCES CONSIDERED EXCEPT WHERE LINED THROUGH. /A.R./

U.S. Department of Commerce, Patent and Trademark Office	Attorney Docket No.	Serial No.
	T00071	09/810,514
INFORMATION DISCLOSURE STATEMENT BY APPLICANT	Applicant(s)	
(Use several sheets if necessary)	David Chao, et al.	
	Filing Date	Group
	March 15, 2001	3627

U.S. Patent Documents

*Examiner Initial		Document Number	Date	Name	Class	Subclass	Filing Date If Appropriate
/A.R./	AA	2001/0032094	10/2001	Ghosh et al.	705	1	
	AB						
	AC						
	AD						
	AE						
	AF						
	AG						
	AH						
	AI						
	AJ						
	AK						

Foreign Patent Documents

							Translation	
		Document	Date	Country	Class	Subclass	Yes	No
	AL						☐	☐
	AM						☐	☐
	AN						☐	☐
	AO							
	AP							

OTHER ART (Including Author, Title, Date, Pertinent Pages, Etc.)

	AR	
	AS	
	AT	

Examiner	/Andrew Joseph Rudy/	Date Considered	07/19/2010

*EXAMINER: Initial if reference considered, whether or not citation is in conformance with MPEP 609; Draw line through citation if not in conformance and not considered. Include copy of this form with your communication to applicant.

U.S. Department of Commerce, Patent and Trademark Office	Attorney Docket No.	Serial No.
	T00071	09/810,514
INFORMATION DISCLOSURE STATEMENT BY APPLICANT	Applicant(s)	
(Use several sheets if necessary)	David Chao et al.	
	Filing Date	Group
	March 15, 2001	3687

U.S. Patent Documents

*Examiner Initial		Document Number	Date	Name	Class	Subclass	Filing Date If Appropriate
	AA						
	AB						
	AC						
	AD						
	AE						
	AF						
	AG						
	AH						
	AI						
	AJ						
	AK						
	AL						
	AM						

Foreign Patent Documents

							Translation	
		Document	Date	Country	Class	Subclass	Yes	No
	An						☐	☐
	AO						☐	☐
	AP						☐	☐
	AQ							
	AR							

OTHER ART (Including Author, Title, Date, Pertinent Pages, Etc.)

/A.R./	AS	Documents for U.S. Patent Application No. 09/896,144 in the U.S.P.T.O.'s Patent Application Information Retrieval (PAIR) system.
	AT	

Examiner /Andrew Joseph Rudy/ Date Considered 07/19/2010

*EXAMINER: Initial if reference considered, whether or not citation is in conformance with MPEP 609; Draw line through citation if not in conformance and not considered. Include copy of this form with your communication to applicant.

U.S. Department of Commerce, Patent and Trademark Office	Attorney Docket No.	Serial No.
	T00071	09/810,514
INFORMATION DISCLOSURE STATEMENT BY APPLICANT	Applicant(s)	
(Use several sheets if necessary)	David Chao, et al.	
	Filing Date	Group
	March 15, 2001	3627

U.S. Patent Documents

*Examiner Initial		Document Number	Date	Name	Class	Subclass	Filing Date If Appropriate
	AA						
	AB						
	AC						
	AD						
	AE						
	AF						
	AG						
	AH						
	AI						
	AJ						
	AK						

Foreign Patent Documents

							Translation	
		Document	Date	Country	Class	Subclass	Yes	No
	AL						☐	☐
	AM						☐	☐
	AN						☐	☐
	AO							
	AP							

OTHER ART (Including Author, Title, Date, Pertinent Pages, Etc.)

/A.R./	AR	Powell et al., U.S. Patent Application Serial No. 60/216,913, filed July 6, 2000, entitled "Transactional Processing Exchange System and Methods"
	AS	
	AT	

Examiner	/Andrew Joseph Rudy/	Date Considered	07/19/2010

*EXAMINER: Initial if reference considered, whether or not citation is in conformance with MPEP 609; Draw line through citation if not in conformance and not considered. Include copy of this form with your communication to applicant.

U.S. Department of Commerce, Patent and Trademark Office	Attorney Docket No.	Serial No.
	T00071	09/810,514
INFORMATION DISCLOSURE STATEMENT BY APPLICANT	Applicant(s)	
(Use several sheets if necessary)	David Chao, et al.	
	Filing Date	Group
	March 15, 2001	3627

OIPE
OCT 14 2005
PATENT & TRADEMARK OFFICE

U.S. Patent Documents

*Examiner Initial		Document Number	Date	Name	Class	Subclass	Filing Date If Appropriate
	AA	5,369,732	11/29/1994	Lynch et al.	395	51	
	AB	5,515,524	05/07/1996	Lynch et al.	395	500	
	AC	5,708,798	01/13/1998	Lynch et al.	395	500	
	AD	5,825,651	10/20/1998	Gupta et al.	364	468.09	
	AE	5,878,400	03/02/1999	Carter III	705	20	
	AF	6,002,854	12/14/1999	Lynch et al.	395	500.01	
	AG	6,157,922	12/05/2000	Vaughan	706	46	
	AH	6,629,153	09/30/2003	Gupta et al.	709	316	
	AI	6,662,164	12/09/2003	Koppelman et al.	705	14	
	AJ	6,405,308	06/11/2002	Gupta et al.	713	1	
	AK	6,446,057	09/03/2002	Vaughan	706	46	

Foreign Patent Documents

							Translation	
		Document	Date	Country	Class	Subclass	Yes	No
	AL						☐	☐
	AM						☐	☐
	AN						☐	☐
	AO							

OTHER ART (Including Author, Title, Date, Pertinent Pages, Etc.)

	AP	Norman Walsh, XSL The Extensible Style Language [online], Web Techniques, January 1999 http://www.webtechniques.com/archives/1990/01/walsh/, retrieved 8/9/05
	AQ	Selena Sol, What is a Markup Language [online], Web Developer's Virtual Library, March 8, 1999, http://www.wdvl.internet.com/Authoring/Languages/XML/Tutorials/Intro/what_is_markup_language, retrieved 9/21/05
	AR	Selena Sol, What is XML [online], Web Developer's Virtual Library, March 8, 1999, http://wdvl.internet.com/Authoring/Languages/XML/Tutorials/Intro/what_is_xml.html, retrieved 9/16/05
	AQ	Selena Sol, The Well-Formed Document [online], Web Developer's Virtual Library, March 8, 1999, http://wdvl.internet.com/Authoring/Languages/XML/Tutorials/Intro/well_iformed_doc.html, retrieved 8/10/05

Examiner/Andrew Joseph Rudy/	Date Considered 07/19/2010

*EXAMINER: Initial if reference considered, whether or not citation is in conformance with MPEP 609; Draw line through citation if not in conformance and not considered. Include copy of this form with your communication to applicant.

ALL REFERENCES CONSIDERED EXCEPT WHERE LINED THROUGH. /A.R./

U.S. Department of Commerce, Patent and Trademark Office	Attorney Docket No.	Serial No.
	T00071	09/810,514
INFORMATION DISCLOSURE STATEMENT BY APPLICANT	Applicant(s)	
(Use several sheets if necessary)	David Chao, et al.	
	Filing Date	Group
	March 15, 2001	3627

U.S. Patent Documents

*Examiner Initial		Document Number	Date	Name	Class	Subclass	Filing Date If Appropriate
	AA	6,553,350	04/22/2003	Carter III	705	20	
	AB	6,865,524	03/08/2005	Shah et al.	703	13	
	AC	09/163,752		Waugh et al.			09/30/1998
	AD	09/413,963		Lynch et al.			10/07/1999
	AE	09/809,991		Chao et al.			03/15/2001
	AF	09/810,012		Chao et al.			03/15/2001
	AG	09/810,515		Zhou et al.			03/15/2001
	AH	09/810,519		Zhou et al.			03/13/2001
	AI	09/896,140		Gharavy			06/29/2001
	AJ	09/896,144		Gharavy			06/29/2001
	AK						

Foreign Patent Documents

							Translation	
		Document	Date	Country	Class	Subclass	Yes	No
	AL						☐	☐
	AM						☐	☐
	AN						☐	☐
	AO							

OTHER ART (Including Author, Title, Date, Pertinent Pages, Etc.)

	AP	Selena Sol, Introducing the Valid XML Document and the DTD [online], Web Developer's Virtual Library, May 3, 1999, http://wdvl.internet.com/Authoring/Languages/XML/Tutorials/Intro/dtd_intro.html, retrieved 8/10/05
	AQ	XSLT, Xpath and XSL Formatting Objects [online], Web Developer's Virtual Library, http://wdvl.internet.com/Authoring/Languages/XSL, retrieved 8/10/05
	AR	Adam Rifkin, A Look at XML [online], http://www.webdeveloper.com/xml/xml_a_look_at_xml.html, retrieved 8/10/05
	AS	A Flexible Commission System to Improve Your Agency Relationships, CSC: Financial Services – S3+ Contract and Commissions [online], http://www.csc-fs.com/MARKETS/detail/pc_s3 contracts.asp, retrieved 9/16/05

Examiner /Andrew Joseph Rudy/	Date Considered 07/19/2010

*EXAMINER: Initial if reference considered, whether or not citation is in conformance with MPEP 609; Draw line through citation if not in conformance and not considered. Include copy of this form with your communication to applicant.

ALL REFERENCES CONSIDERED EXCEPT WHERE LINED THROUGH. /A.R./

U.S. Department of Commerce, Patent and Trademark Office	Attorney Docket No.	Serial No.
	T00071	09/810,514
INFORMATION DISCLOSURE STATEMENT BY APPLICANT	Applicant(s)	
(Use several sheets if necessary)	David Chao, et al.	
	Filing Date	Group
	March 15, 2001	3627

U.S. Patent Documents

*Examiner Initial		Document Number	Date	Name	Class	Subclass	Filing Date If Appropriate
	AA						
	AB						
	AC						
	AD						
	AE						
	AF						
	AG						
	AH						
	AI						
	AJ						
	AK						

Foreign Patent Documents

							Translation	
		Document	Date	Country	Class	Subclass	Yes	No
	AL						☐	☐
	AM						☐	☐
	AN						☐	☐
	AO							

OTHER ART (Including Author, Title, Date, Pertinent Pages, Etc.)

	AP	PolicyLink Commission System, CSC: Financial Services [online], http://www.csc-fs.com/MARKETS/detail/la_policylinkcomm.asp, retrieved 9/16/05
	AQ	Pictorial, Inc. – Insurance and Financial Services Training [online], http://www.pictorial.com Retrieved August 16, 2001
	AR	What is AppointPak? [online], http://www.bisys-licensing.com/apptpak/whatis.htm, retrieved August 16, 2001
	AS	AppointPak Features and Benefits [online], http://www.bisys-licensing.com/apptpak/features/htm, Retrieved 9/16/05

Examiner /Andrew Joseph Rudy/ Date Considered 07/19/2010

*EXAMINER: Initial if reference considered, whether or not citation is in conformance with MPEP 609; Draw line through citation if not in conformance and not considered. Include copy of this form with your communication to applicant.

ALL REFERENCES CONSIDERED EXCEPT WHERE LINED THROUGH. /A.R./

U.S. Department of Commerce, Patent and Trademark Office	Attorney Docket No.	Serial No.
	T00071	09/810,514
INFORMATION DISCLOSURE STATEMENT BY APPLICANT	Applicant(s)	
(Use several sheets if necessary)	David Chao, et al.	
	Filing Date	Group
	March 15, 2001	3627

U.S. Patent Documents

*Examiner Initial		Document Number	Date	Name	Class	Subclass	Filing Date If Appropriate
	AA						
	AB						
	AC						
	AD						
	AE						
	AF						
	AG						
	AH						
	AI						
	AJ						
	AK						

Foreign Patent Documents

							Translation	
		Document	Date	Country	Class	Subclass	Yes	No
	AL						☐	☐
	AM						☐	☐
	AN						☐	☐
	AO							

OTHER ART (Including Author, Title, Date, Pertinent Pages, Etc.)

	AP	What is e-PAL? [online], http://www.bisys-licensing.com/palvt/whatis.htm, retrieved 9/16/05
	AQ	e-PAL Features & Benefits [online], http://www.bisys-licensing.com/palvt/features.htm, retrieved 9/16/05
	AR	Nine e-PAL Services, Features and Benefits [online], http://www.bisys-licensing.com/palvt/serv,html, retrieved 9/21/05
	AS	HRMS Enterprise Applications, Human Resources Management, PeopleSoft, Inc. [online], http://www.peoplesoft.com/en/us/products/applications/hrm/HRMS/hrmsea/index.html, retrieved 9/16/05

Examiner /Andrew Joseph Rudy/	Date Considered 07/19/2010

*EXAMINER: Initial if reference considered, whether or not citation is in conformance with MPEP 609; Draw line through citation if not in conformance and not considered. Include copy of this form with your communication to applicant.

ALL REFERENCES CONSIDERED EXCEPT WHERE LINED THROUGH. /A.R./

U.S. Department of Commerce, Patent and Trademark Office	Attorney Docket No.	Serial No.
	T00071	09/810,514
INFORMATION DISCLOSURE STATEMENT BY APPLICANT	Applicant(s)	
(Use several sheets if necessary)	David Chao, et al.	
	Filing Date	Group
	March 15, 2001	3627

U.S. Patent Documents

*Examiner Initial		Document Number	Date	Name	Class	Subclass	Filing Date If Appropriate
	AA						
	AB						
	AC						
	AD						
	AE						
	AF						
	AG						
	AH						
	AI						
	AJ						
	AK						

Foreign Patent Documents

							Translation	
		Document	Date	Country	Class	Subclass	Yes	No
	AL						☐	☐
	AM						☐	☐
	AN						☐	☐
	AO							

OTHER ART (Including Author, Title, Date, Pertinent Pages, Etc.)

	AP	HRMS Collaborative Applications, Human Resources Management, PeopleSoft, Inc. [online], http://www.peoplesoft.com/en/us/products/applications/hrm/HRMS/hrmsca/index.html, retrieved 9/16/05
	AQ	Financial Planning Made Easy, American Express Financial Services [online], http://finance.americanexpress.com/sif/cda/page/0,1641,4588,00.asp, retrieved 9/16/05
	AR	Advice and Planning, American Express Financial Services [online], http://finance.americanexpress.com/sif/cda/page/0,1641,7569,00.asp, retrieved 9/16/05
	AS	Why ContractMaker, And How Does it Work?, Legal Contracts, Digital Contracts, Inc., [online], http://www.digicontracts.com/info/whyhow.html, retrieved 8/10/05

Examiner	/Andrew Joseph Rudy/	Date Considered	07/19/2010

*EXAMINER: Initial if reference considered, whether or not citation is in conformance with MPEP 609; Draw line through citation if not in conformance and not considered. Include copy of this form with your communication to applicant.

ALL REFERENCES CONSIDERED EXCEPT WHERE LINED THROUGH. /A.R./

U.S. Department of Commerce, Patent and Trademark Office	Attorney Docket No.	Serial No.
	T00071	09/810,514
INFORMATION DISCLOSURE STATEMENT BY APPLICANT	Applicant(s)	
(Use several sheets if necessary)	David Chao, et al.	
	Filing Date	Group
	March 15, 2001	3627

U.S. Patent Documents

*Examiner Initial		Document Number	Date	Name	Class	Subclass	Filing Date If Appropriate
	AA						
	AB						
	AC						
	AD						
	AE						
	AF						
	AG						
	AH						
	AI						
	AJ						
	AK						

Foreign Patent Documents

							Translation	
		Document	Date	Country	Class	Subclass	Yes	No
	AL						☐	☐
	AM						☐	☐
	AN						☐	☐
	AO							

OTHER ART (Including Author, Title, Date, Pertinent Pages, Etc.)

	AP	Frequently Asked Questions, Digital Contracts, Inc., [online], http://www.digicontracts.com/kits/faqs.html, retrieved 8/10/05
	AQ	
	AR	
	AS	

Examiner /Andrew Joseph Rudy/	Date Considered 07/19/2010

*EXAMINER: Initial if reference considered, whether or not citation is in conformance with MPEP 609; Draw line through citation if not in conformance and not considered. Include copy of this form with your communication to applicant.

ALL REFERENCES CONSIDERED EXCEPT WHERE LINED THROUGH. /A.R./

UNITED STATES PATENT AND TRADEMARK OFFICE

UNITED STATES DEPARTMENT OF COMMERCE
United States Patent and Trademark Office
Address: COMMISSIONER FOR PATENTS
P.O. Box 1450
Alexandria, Virginia 22313-1450
www.uspto.gov

APPLICATION NO.	FILING DATE	FIRST NAMED INVENTOR	ATTORNEY DOCKET NO.	CONFIRMATION NO.
09/810,514	03/15/2001	David Chao	T00071	6193

33438 7590 07/29/2010
HAMILTON & TERRILE, LLP
P.O. BOX 203518
AUSTIN, TX 78720

EXAMINER	
RUDY, ANDREW J	

ART UNIT	PAPER NUMBER
3687	

NOTIFICATION DATE	DELIVERY MODE
07/29/2010	ELECTRONIC

Please find below and/or attached an Office communication concerning this application or proceeding.

The time period for reply, if any, is set in the attached communication.

Notice of the Office communication was sent electronically on above-indicated "Notification Date" to the following e-mail address(es):

tmunoz@hamiltonterrile.com

UNITED STATES DEPARTMENT OF COMMERCE
U.S. Patent and Trademark Office
Address: COMMISSIONER FOR PATENTS
P.O. Box 1450
Alexandria, Virginia 22313-1450

APPLICATION NO./ CONTROL NO.	FILING DATE	FIRST NAMED INVENTOR / PATENT IN REEXAMINATION	ATTORNEY DOCKET NO.
09810514	3/15/2001	CHAO ET AL.	T00071

HAMILTON & TERRILE, LLP
P.O. BOX 203518
AUSTIN, TX 78720

EXAMINER	
Andrew Joseph. Rudy	
ART UNIT	**PAPER**
3687	20100727

DATE MAILED:

Please find below and/or attached an Office communication concerning this application or proceeding.

Commissioner for Patents

DETAILED ACTION
EXAMINER'S AMENDMENT

1. An examiner's amendment to the record appears below. Should the changes and/or additions be unacceptable to applicant, an amendment may be filed as provided by 37 CFR 1.312. To ensure consideration of such an amendment, it MUST be submitted no later than the payment of the issue fee.
Authorization for this examiner's amendment was given in a telephone interview with Kent B. Chambers (Reg. No. 38,839) on July 27, 2010.

The application has been amended as follows where Claim 2 now reads:

2. (Currently Amended) The system of claim [2] 1 wherein said licensing module is further configured to determine if a party associated with said sales transaction comprises a valid appointment.

Allowable Subject Matter

2. Claims 1-42 and 65-68 remain allowed pursuant to the June 3, 2010 Notice of Allowance.

3. Any inquiry concerning this communication or earlier communications from the examiner should be directed to Andrew Joseph Rudy whose telephone number is 571-272-6789. The examiner can normally be reached on Monday thru Friday.
If attempts to reach the examiner by telephone are unsuccessful, the examiner's supervisor, Matthew S. Gart can be reached on 571-272-3955. The fax phone number for the organization where this application or proceeding is assigned is 571-273-8300.
Information regarding the status of an application may be obtained from the Patent Application Information Retrieval (PAIR) system. Status information for published applications may be obtained from either Private PAIR or Public PAIR. Status information for unpublished applications is available through Private PAIR only. For more information about the PAIR system, see http://pair-direct.uspto.gov. Should you have questions on access to the Private PAIR system, contact the Electronic Business Center (EBC) at 866-217-9197 (toll-free). If you would like assistance from a USPTO Customer Service Representative or access to the automated information system, call 800-786-9199 (IN USA OR CANADA) or 571-272-1000.

/Andrew Joseph Rudy/
Primary Examiner, Art Unit 3687

PTO-90C (Rev.04-03)

Best Available Copy

U.S. Department of Commerce, Patent and Trademark Office	Attorney Docket No	Serial No.
	T00071	09/810,514
INFORMATION DISCLOSURE STATEMENT BY APPLICANT	Applicant(s)	
(Use several sheets if necessary)	David Chao, et al.	
	Filing Date	Group
	March 15, 2001	3627

OIPE 1660 JUN 09 2006 PATENT & TRADEMARK OFFICE

RL 7/30/10

U.S. Patent Documents

*Examiner Initial		Document Number	Date	Name	Class	Subclass	Filing Date If Appropriate
MSR	AA	~~6,682,571~~	03/2005	Martin et al.	705	4	6862571
	AB	6,671,818	12/2003	Mikurak	714	4	
	AC	6,618,706	09/2003	Rive et al.	705	30	
	AD	6,606,744	08/2003	Mikurak	717	174	
	AE	6,473,609	10/2002	Schwartz et al.	455	406	
	AF	6,105,001	08/2000	Masi et al.	705	14	
	AG	6,415,265	07/2002	Snell et al.	705	26	
	AH	6,377,956	04/2002	Hsu et al.	707	104.1	
	AI	6,351,812	02/2002	Datar et al.	713	182	
✓	AJ	2001/0049622	12/2001	Gozdeck et al.	705	11	
MSR	AK	2001/0039547	11/2001	Black et al.	707	102	

Foreign Patent Documents

		Document	Date	Country	Class	Subclass	Translation Yes	Translation No
	AL						☐	☐
	AM						☐	☐
	AN						☐	☐
	AO							
	AP							

OTHER ART (Including Author, Title, Date, Pertinent Pages, Etc.)

	AR	
	AS	
	AT	

Examiner	Date Considered
[signature]	February 15 2007

*EXAMINER: Initial if reference considered, whether or not citation is in conformance with MPEP 609; Draw line through citation if not in conformance and not considered. Include copy of this form with your communication to applicant.

Doc code: RCEX
Doc description: Request for Continued Examination (RCE)

PTO/SB/30EFS (11-08)
Approved for use through 12/31/2008. OMB 0651-0031
U.S. Patent and Trademark Office; U.S. DEPARTMENT OF COMMERCE
Under the Paperwork Reduction Act of 1995, no persons are required to respond to a collection of information unless it contains a valid OMB control number.

REQUEST FOR CONTINUED EXAMINATION(RCE)TRANSMITTAL
(Submitted Only via EFS-Web)

Application Number	09810514	Filing Date	2001-03-15	Docket Number (if applicable)	T00071	Art Unit	3687
First Named Inventor	David Chao			Examiner Name	Andrew J. Rudy		

This is a Request for Continued Examination (RCE) under 37 CFR 1.114 of the above-identified application.
Request for Continued Examination (RCE) practice under 37 CFR 1.114 does not apply to any utility or plant application filed prior to June 8, 1995, or to any design application. The Instruction Sheet for this form is located at WWW.USPTO.GOV

SUBMISSION REQUIRED UNDER 37 CFR 1.114

Note: If the RCE is proper, any previously filed unentered amendments and amendments enclosed with the RCE will be entered in the order in which they were filed unless applicant instructs otherwise. If applicant does not wish to have any previously filed unentered amendment(s) entered, applicant must request non-entry of such amendment(s).

☒ Previously submitted. If a final Office action is outstanding, any amendments filed after the final Office action may be considered as a submission even if this box is not checked.

☐ Consider the arguments in the Appeal Brief or Reply Brief previously filed on _____

☐ Other _____

☒ Enclosed

☐ Amendment/Reply

☒ Information Disclosure Statement (IDS)

☐ Affidavit(s)/ Declaration(s)

☐ Other _____

MISCELLANEOUS

☐ Suspension of action on the above-identified application is requested under 37 CFR 1.103(c) for a period of months _____
(Period of suspension shall not exceed 3 months; Fee under 37 CFR 1.17(i) required)

☐ Other _____

FEES

The RCE fee under 37 CFR 1.17(e) is required by 37 CFR 1.114 when the RCE is filed.

☒ The Director is hereby authorized to charge any underpayment of fees, or credit any overpayments, to Deposit Account No 502264

SIGNATURE OF APPLICANT, ATTORNEY, OR AGENT REQUIRED

☒ Patent Practitioner Signature

☐ Applicant Signature

PTO/SB/30EFS (11-08)
Approved for use through 12/31/2008. OMB 0651-0031
U.S. Patent and Trademark Office; U.S. DEPARTMENT OF COMMERCE
Under the Paperwork Reduction Act of 1995, no persons are required to respond to a collection of information unless it contains a valid OMB control number.

Signature of Registered U.S. Patent Practitioner			
Signature	/Kent B. Chambers/	Date (YYYY-MM-DD)	2010-09-03
Name	Kent B. Chambers	Registration Number	38839

This collection of information is required by 37 CFR 1.114. The information is required to obtain or retain a benefit by the public which is to file (and by the USPTO to process) an application. Confidentiality is governed by 35 U.S.C. 122 and 37 CFR 1.11 and 1.14. This collection is estimated to take 12 minutes to complete, including gathering, preparing, and submitting the completed application form to the USPTO. Time will vary depending upon the individual case. Any comments on the amount of time you require to complete this form and/or suggestions for reducing this burden, should be sent to the Chief Information Officer, U.S. Patent and Trademark Office, U.S. Department of Commerce, P.O. Box 1450, Alexandria, VA 22313-1450.

If you need assistance in completing the form, call 1-800-PTO-9199 and select option 2.

Privacy Act Statement

The Privacy Act of 1974 (P.L. 93-579) requires that you be given certain information in connection with your submission of the attached form related to a patent application or patent. Accordingly, pursuant to the requirements of the Act, please be advised that: (1) the general authority for the collection of this information is 35 U.S.C. 2(b)(2); (2) furnishing of the information solicited is voluntary; and (3) the principal purpose for which the information is used by the U.S. Patent and Trademark Office is to process and/or examine your submission related to a patent application or patent. If you do not furnish the requested information, the U.S. Patent and Trademark Office may not be able to process and/or examine your submission, which may result in termination of proceedings or abandonment of the application or expiration of the patent.

The information provided by you in this form will be subject to the following routine uses:

1. The information on this form will be treated confidentially to the extent allowed under the Freedom of Information Act (5 U.S.C. 552) and the Privacy Act (5 U.S.C. 552a). Records from this system of records may be disclosed to the Department of Justice to determine whether the Freedom of Information Act requires disclosure of these record s.

2. A record from this system of records may be disclosed, as a routine use, in the course of presenting evidence to a court, magistrate, or administrative tribunal, including disclosures to opposing counsel in the course of settlement negotiations.

3. A record in this system of records may be disclosed, as a routine use, to a Member of Congress submitting a request involving an individual, to whom the record pertains, when the individual has requested assistance from the Member with respect to the subject matter of the record.

4. A record in this system of records may be disclosed, as a routine use, to a contractor of the Agency having need for the information in order to perform a contract. Recipients of information shall be required to comply with the requirements of the Privacy Act of 1974, as amended, pursuant to 5 U.S.C. 552a(m).

5. A record related to an International Application filed under the Patent Cooperation Treaty in this system of records may be disclosed, as a routine use, to the International Bureau of the World Intellectual Property Organization, pursuant to the Patent Cooperation Treaty.

6. A record in this system of records may be disclosed, as a routine use, to another federal agency for purposes of National Security review (35 U.S.C. 181) and for review pursuant to the Atomic Energy Act (42 U.S.C. 218(c)).

7. A record from this system of records may be disclosed, as a routine use, to the Administrator, General Services, or his/her designee, during an inspection of records conducted by GSA as part of that agency's responsibility to recommend improvements in records management practices and programs, under authority of 44 U.S.C. 2904 and 2906. Such disclosure shall be made in accordance with the GSA regulations governing inspection of records for this purpose, and any other relevant (i.e., GSA or Commerce) directive. Such disclosure shall not be used to make determinations about individuals.

8. A record from this system of records may be disclosed, as a routine use, to the public after either publication of the application pursuant to 35 U.S.C. 122(b) or issuance of a patent pursuant to 35 U.S.C. 151. Further, a record may be disclosed, subject to the limitations of 37 CFR 1.14, as a routine use, to the public if the record was filed in an application which became abandoned or in which the proceedings were terminated and which application is referenced by either a published application, an application open to public inspections or an issued patent.

9. A record from this system of records may be disclosed, as a routine use, to a Federal, State, or local law enforcement agency, if the USPTO becomes aware of a violation or potential violation of law or regulation.

Electronic Patent Application Fee Transmittal

Application Number:	09810514
Filing Date:	15-Mar-2001
Title of Invention:	METHOD AND SYSTEM FOR MANAGING DISTRIBUTOR INFORMATION
First Named Inventor/Applicant Name:	David Chao
Filer:	Kent Bryan Chambers/Terri Munoz
Attorney Docket Number:	T00071

Filed as Large Entity

Utility under 35 USC 111(a) Filing Fees

Description	Fee Code	Quantity	Amount	Sub-Total in USD($)
Basic Filing:				
Pages:				
Claims:				
Miscellaneous-Filing:				
Petition:				
Patent-Appeals-and-Interference:				
Post-Allowance-and-Post-Issuance:				
Extension-of-Time:				

Description	Fee Code	Quantity	Amount	Sub-Total in USD($)
Miscellaneous:				
Request for continued examination	1801	1	810	810
		Total in USD ($)		**810**

Electronic Acknowledgement Receipt

EFS ID:	8357021
Application Number:	09810514
International Application Number:	
Confirmation Number:	6193
Title of Invention:	METHOD AND SYSTEM FOR MANAGING DISTRIBUTOR INFORMATION
First Named Inventor/Applicant Name:	David Chao
Customer Number:	33438
Filer:	Kent Bryan Chambers/Terri Munoz
Filer Authorized By:	Kent Bryan Chambers
Attorney Docket Number:	T00071
Receipt Date:	03-SEP-2010
Filing Date:	15-MAR-2001
Time Stamp:	16:57:34
Application Type:	Utility under 35 USC 111(a)

Payment information:

Submitted with Payment	yes
Payment Type	Credit Card
Payment was successfully received in RAM	$810
RAM confirmation Number	3052
Deposit Account	
Authorized User	

File Listing:

Document Number	Document Description	File Name	File Size(Bytes)/ Message Digest	Multi Part /.zip	Pages (if appl.)
		Ex. 1002546397			

1	Information Disclosure Statement (IDS) Filed (SB/08)	T00071_IDS_9_3_10.pdf	611706 9b5594c20e9978af2e4d55eb1d3ad7c9c35178f3	no	4
Warnings:					
Information:					
2	Request for Continued Examination (RCE)	T00071_RCETransmittal.pdf	697367 a07fe6930c720c4a285730cfc2f3949579fa1b5c	no	3
Warnings:					
Information:					
3	Fee Worksheet (PTO-875)	fee-info.pdf	30452 d70ecd408852f87ff6564a5e81d8e27f1b8e5ace	no	2
Warnings:					
Information:					
			Total Files Size (in bytes):	1339525	

This Acknowledgement Receipt evidences receipt on the noted date by the USPTO of the indicated documents, characterized by the applicant, and including page counts, where applicable. It serves as evidence of receipt similar to a Post Card, as described in MPEP 503.

New Applications Under 35 U.S.C. 111

If a new application is being filed and the application includes the necessary components for a filing date (see 37 CFR 1.53(b)-(d) and MPEP 506), a Filing Receipt (37 CFR 1.54) will be issued in due course and the date shown on this Acknowledgement Receipt will establish the filing date of the application.

National Stage of an International Application under 35 U.S.C. 371

If a timely submission to enter the national stage of an international application is compliant with the conditions of 35 U.S.C. 371 and other applicable requirements a Form PCT/DO/EO/903 indicating acceptance of the application as a national stage submission under 35 U.S.C. 371 will be issued in addition to the Filing Receipt, in due course.

New International Application Filed with the USPTO as a Receiving Office

If a new international application is being filed and the international application includes the necessary components for an international filing date (see PCT Article 11 and MPEP 1810), a Notification of the International Application Number and of the International Filing Date (Form PCT/RO/105) will be issued in due course, subject to prescriptions concerning national security, and the date shown on this Acknowledgement Receipt will establish the international filing date of the application.

PTO/SB/08a (01-10)
Approved for use through 07/31/2012. OMB 0651-0031
U.S. Patent and Trademark Office; U.S. DEPARTMENT OF COMMERCE
Under the Paperwork Reduction Act of 1995, no persons are required to respond to a collection of information unless it contains a valid OMB control number.

INFORMATION DISCLOSURE STATEMENT BY APPLICANT

(Not for submission under 37 CFR 1.99)

Application Number	09810514
Filing Date	2001-03-15
First Named Inventor	David Chao
Art Unit	3687
Examiner Name	Andrew J. Rudy
Attorney Docket Number	T00071

U.S.PATENTS Remove

Examiner Initial*	Cite No	Patent Number	Kind Code[1]	Issue Date	Name of Patentee or Applicant of cited Document	Pages,Columns,Lines where Relevant Passages or Relevant Figures Appear
	1					

If you wish to add additional U.S. Patent citation information please click the Add button. Add

U.S.PATENT APPLICATION PUBLICATIONS Remove

Examiner Initial*	Cite No	Publication Number	Kind Code[1]	Publication Date	Name of Patentee or Applicant of cited Document	Pages,Columns,Lines where Relevant Passages or Relevant Figures Appear
	1	20020023055	A1	2002-02-21	Antognini et al.	

If you wish to add additional U.S. Published Application citation information please click the Add button. Add

FOREIGN PATENT DOCUMENTS Remove

Examiner Initial*	Cite No	Foreign Document Number[3]	Country Code[2] i	Kind Code[4]	Publication Date	Name of Patentee or Applicant of cited Document	Pages,Columns,Lines where Relevant Passages or Relevant Figures Appear	T[5]
	1							☐

If you wish to add additional Foreign Patent Document citation information please click the Add button Add

NON-PATENT LITERATURE DOCUMENTS Remove

Examiner Initials*	Cite No	Include name of the author (in CAPITAL LETTERS), title of the article (when appropriate), title of the item (book, magazine, journal, serial, symposium, catalog, etc), date, pages(s), volume-issue number(s), publisher, city and/or country where published.	T[5]

INFORMATION DISCLOSURE STATEMENT BY APPLICANT (Not for submission under 37 CFR 1.99)		
	Application Number	09810514
	Filing Date	2001-03-15
	First Named Inventor	David Chao
	Art Unit	3687
	Examiner Name	Andrew J. Rudy
	Attorney Docket Number	T00071

	1		☐

If you wish to add additional non-patent literature document citation information please click the Add button Add

EXAMINER SIGNATURE

Examiner Signature		Date Considered	

*EXAMINER: Initial if reference considered, whether or not citation is in conformance with MPEP 609. Draw line through a citation if not in conformance and not considered. Include copy of this form with next communication to applicant.

[1] See Kind Codes of USPTO Patent Documents at www.USPTO.GOV or MPEP 901.04. [2] Enter office that issued the document, by the two-letter code (WIPO Standard ST.3). [3] For Japanese patent documents, the indication of the year of the reign of the Emperor must precede the serial number of the patent document. [4] Kind of document by the appropriate symbols as indicated on the document under WIPO Standard ST.16 if possible. [5] Applicant is to place a check mark here if English language translation is attached.

INFORMATION DISCLOSURE STATEMENT BY APPLICANT

(Not for submission under 37 CFR 1.99)

Application Number	09810514
Filing Date	2001-03-15
First Named Inventor	David Chao
Art Unit	3687
Examiner Name	Andrew J. Rudy
Attorney Docket Number	T00071

CERTIFICATION STATEMENT

Please see 37 CFR 1.97 and 1.98 to make the appropriate selection(s):

☐ That each item of information contained in the information disclosure statement was first cited in any communication from a foreign patent office in a counterpart foreign application not more than three months prior to the filing of the information disclosure statement. See 37 CFR 1.97(e)(1).

OR

☐ That no item of information contained in the information disclosure statement was cited in a communication from a foreign patent office in a counterpart foreign application, and, to the knowledge of the person signing the certification after making reasonable inquiry, no item of information contained in the information disclosure statement was known to any individual designated in 37 CFR 1.56(c) more than three months prior to the filing of the information disclosure statement. See 37 CFR 1.97(e)(2).

☐ See attached certification statement.

☐ Fee set forth in 37 CFR 1.17 (p) has been submitted herewith.

☒ None

SIGNATURE

A signature of the applicant or representative is required in accordance with CFR 1.33, 10.18. Please see CFR 1.4(d) for the form of the signature.

Signature	/Kent B. Chambers/	Date (YYYY-MM-DD)	2010-09-03
Name/Print	Kent B. Chambers	Registration Number	38839

This collection of information is required by 37 CFR 1.97 and 1.98. The information is required to obtain or retain a benefit by the public which is to file (and by the USPTO to process) an application. Confidentiality is governed by 35 U.S.C. 122 and 37 CFR 1.14. This collection is estimated to take 1 hour to complete, including gathering, preparing and submitting the completed application form to the USPTO. Time will vary depending upon the individual case. Any comments on the amount of time you require to complete this form and/or suggestions for reducing this burden, should be sent to the Chief Information Officer, U.S. Patent and Trademark Office, U.S. Department of Commerce, P.O. Box 1450, Alexandria, VA 22313-1450. DO NOT SEND FEES OR COMPLETED FORMS TO THIS ADDRESS. **SEND TO: Commissioner for Patents, P.O. Box 1450, Alexandria, VA 22313-1450.**

Privacy Act Statement

The Privacy Act of 1974 (P.L. 93-579) requires that you be given certain information in connection with your submission of the attached form related to a patent application or patent. Accordingly, pursuant to the requirements of the Act, please be advised that: (1) the general authority for the collection of this information is 35 U.S.C. 2(b)(2); (2) furnishing of the information solicited is voluntary; and (3) the principal purpose for which the information is used by the U.S. Patent and Trademark Office is to process and/or examine your submission related to a patent application or patent. If you do not furnish the requested information, the U.S. Patent and Trademark Office may not be able to process and/or examine your submission, which may result in termination of proceedings or abandonment of the application or expiration of the patent.

The information provided by you in this form will be subject to the following routine uses:

1. The information on this form will be treated confidentially to the extent allowed under the Freedom of Information Act (5 U.S.C. 552) and the Privacy Act (5 U.S.C. 552a). Records from this system of records may be disclosed to the Department of Justice to determine whether the Freedom of Information Act requires disclosure of these record s.

2. A record from this system of records may be disclosed, as a routine use, in the course of presenting evidence to a court, magistrate, or administrative tribunal, including disclosures to opposing counsel in the course of settlement negotiations.

3. A record in this system of records may be disclosed, as a routine use, to a Member of Congress submitting a request involving an individual, to whom the record pertains, when the individual has requested assistance from the Member with respect to the subject matter of the record.

4. A record in this system of records may be disclosed, as a routine use, to a contractor of the Agency having need for the information in order to perform a contract. Recipients of information shall be required to comply with the requirements of the Privacy Act of 1974, as amended, pursuant to 5 U.S.C. 552a(m).

5. A record related to an International Application filed under the Patent Cooperation Treaty in this system of records may be disclosed, as a routine use, to the International Bureau of the World Intellectual Property Organization, pursuant to the Patent Cooperation Treaty.

6. A record in this system of records may be disclosed, as a routine use, to another federal agency for purposes of National Security review (35 U.S.C. 181) and for review pursuant to the Atomic Energy Act (42 U.S.C. 218(c)).

7. A record from this system of records may be disclosed, as a routine use, to the Administrator, General Services, or his/her designee, during an inspection of records conducted by GSA as part of that agency's responsibility to recommend improvements in records management practices and programs, under authority of 44 U.S.C. 2904 and 2906. Such disclosure shall be made in accordance with the GSA regulations governing inspection of records for this purpose, and any other relevant (i.e., GSA or Commerce) directive. Such disclosure shall not be used to make determinations about individuals.

8. A record from this system of records may be disclosed, as a routine use, to the public after either publication of the application pursuant to 35 U.S.C. 122(b) or issuance of a patent pursuant to 35 U.S.C. 151. Further, a record may be disclosed, subject to the limitations of 37 CFR 1.14, as a routine use, to the public if the record was filed in an application which became abandoned or in which the proceedings were terminated and which application is referenced by either a published application, an application open to public inspections or an issued patent.

9. A record from this system of records may be disclosed, as a routine use, to a Federal, State, or local law enforcement agency, if the USPTO becomes aware of a violation or potential violation of law or regulation.

PTO/SB/08a (01-10)
Approved for use through 07/31/2012. OMB 0651-0031
U.S. Patent and Trademark Office; U.S. DEPARTMENT OF COMMERCE
Under the Paperwork Reduction Act of 1995, no persons are required to respond to a collection of information unless it contains a valid OMB control number.

INFORMATION DISCLOSURE STATEMENT BY APPLICANT

(Not for submission under 37 CFR 1.99)

Application Number	09810514
Filing Date	2001-03-15
First Named Inventor	David Chao
Art Unit	3687
Examiner Name	Andrew J. Rudy
Attorney Docket Number	T00071

U.S.PATENTS Remove

Examiner Initial*	Cite No	Patent Number	Kind Code[1]	Issue Date	Name of Patentee or Applicant of cited Document	Pages,Columns,Lines where Relevant Passages or Relevant Figures Appear
	1	5337263		1994-08-09	Patermaster	
	2	6128603		2003-10-03	Dent et al.	
	3	6182095	B1	2001-01-30	Leymaster et al.	

If you wish to add additional U.S. Patent citation information please click the Add button. Add

U.S.PATENT APPLICATION PUBLICATIONS Remove

Examiner Initial*	Cite No	Publication Number	Kind Code[1]	Publication Date	Name of Patentee or Applicant of cited Document	Pages,Columns,Lines where Relevant Passages or Relevant Figures Appear
	1	20020169678			Chao et al.	

If you wish to add additional U.S. Published Application citation information please click the Add button. Add

FOREIGN PATENT DOCUMENTS Remove

Examiner Initial*	Cite No	Foreign Document Number[3]	Country Code[2] ¡	Kind Code[4]	Publication Date	Name of Patentee or Applicant of cited Document	Pages,Columns,Lines where Relevant Passages or Relevant Figures Appear	T[5]
	1							☐

INFORMATION DISCLOSURE STATEMENT BY APPLICANT (Not for submission under 37 CFR 1.99)		
	Application Number	09810514
	Filing Date	2001-03-15
	First Named Inventor	David Chao
	Art Unit	3687
	Examiner Name	Andrew J. Rudy
	Attorney Docket Number	T00071

If you wish to add additional Foreign Patent Document citation information please click the Add button [Add]

NON-PATENT LITERATURE DOCUMENTS [Remove]

Examiner Initials*	Cite No	Include name of the author (in CAPITAL LETTERS), title of the article (when appropriate), title of the item (book, magazine, journal, serial, symposium, catalog, etc), date, pages(s), volume-issue number(s), publisher, city and/or country where published.	T[5]
	1	Merriam Webster's Dictionary, definition of relationship, Tenth edition.	☐
	2	SC Commission [retrieved from the Internet, http://web. Archive.org/web/1997062419305...www.trilogy.com/modules/sccommission on February 4, 2002. The snapshot of this web page was downloaded to web.archive.org on June 24, 1997; however, the page information states that the SC Commission web page was last modified on March 12, 1997.]	☐
	3	Selling Chain [retrieved from the Internet, http://web.archive.org/web/19970624190842/www.trilogy.com/products1 on February 4, 2002. The snapshot of this web page was downloaded to web.archive.org on June 24, 1997; however, the page information states that the Selling Chain web page was last modified on March 6, 1997.]	☐
	4	Information on ZipForm, 1998-2000, printed through www.archive.org	☐

If you wish to add additional non-patent literature document citation information please click the Add button [Add]

EXAMINER SIGNATURE

Examiner Signature		Date Considered	

*EXAMINER: Initial if reference considered, whether or not citation is in conformance with MPEP 609. Draw line through a citation if not in conformance and not considered. Include copy of this form with next communication to applicant.

[1] See Kind Codes of USPTO Patent Documents at www.USPTO.GOV or MPEP 901.04. [2] Enter office that issued the document, by the two-letter code (WIPO Standard ST.3). [3] For Japanese patent documents, the indication of the year of the reign of the Emperor must precede the serial number of the patent document. [4] Kind of document by the appropriate symbols as indicated on the document under WIPO Standard ST.16 if possible. [5] Applicant is to place a check mark here if English language translation is attached.

INFORMATION DISCLOSURE STATEMENT BY APPLICANT (Not for submission under 37 CFR 1.99)		
	Application Number	09810514
	Filing Date	2001-03-15
	First Named Inventor	David Chao
	Art Unit	3687
	Examiner Name	Andrew J. Rudy
	Attorney Docket Number	T00071

CERTIFICATION STATEMENT

Please see 37 CFR 1.97 and 1.98 to make the appropriate selection(s):

☐ That each item of information contained in the information disclosure statement was first cited in any communication from a foreign patent office in a counterpart foreign application not more than three months prior to the filing of the information disclosure statement. See 37 CFR 1.97(e)(1).

OR

☐ That no item of information contained in the information disclosure statement was cited in a communication from a foreign patent office in a counterpart foreign application, and, to the knowledge of the person signing the certification after making reasonable inquiry, no item of information contained in the information disclosure statement was known to any individual designated in 37 CFR 1.56(c) more than three months prior to the filing of the information disclosure statement. See 37 CFR 1.97(e)(2).

☐ See attached certification statement.

☐ Fee set forth in 37 CFR 1.17 (p) has been submitted herewith.

☒ None

SIGNATURE

A signature of the applicant or representative is required in accordance with CFR 1.33, 10.18. Please see CFR 1.4(d) for the form of the signature.

Signature	/Kent B. Chambers/	Date (YYYY-MM-DD)	2010-09-07
Name/Print	Kent B. Chambers	Registration Number	38839

This collection of information is required by 37 CFR 1.97 and 1.98. The information is required to obtain or retain a benefit by the public which is to file (and by the USPTO to process) an application. Confidentiality is governed by 35 U.S.C. 122 and 37 CFR 1.14. This collection is estimated to take 1 hour to complete, including gathering, preparing and submitting the completed application form to the USPTO. Time will vary depending upon the individual case. Any comments on the amount of time you require to complete this form and/or suggestions for reducing this burden, should be sent to the Chief Information Officer, U.S. Patent and Trademark Office, U.S. Department of Commerce, P.O. Box 1450, Alexandria, VA 22313-1450. DO NOT SEND FEES OR COMPLETED FORMS TO THIS ADDRESS. **SEND TO: Commissioner for Patents, P.O. Box 1450, Alexandria, VA 22313-1450.**

Privacy Act Statement

The Privacy Act of 1974 (P.L. 93-579) requires that you be given certain information in connection with your submission of the attached form related to a patent application or patent. Accordingly, pursuant to the requirements of the Act, please be advised that: (1) the general authority for the collection of this information is 35 U.S.C. 2(b)(2); (2) furnishing of the information solicited is voluntary; and (3) the principal purpose for which the information is used by the U.S. Patent and Trademark Office is to process and/or examine your submission related to a patent application or patent. If you do not furnish the requested information, the U.S. Patent and Trademark Office may not be able to process and/or examine your submission, which may result in termination of proceedings or abandonment of the application or expiration of the patent.

The information provided by you in this form will be subject to the following routine uses:

1. The information on this form will be treated confidentially to the extent allowed under the Freedom of Information Act (5 U.S.C. 552) and the Privacy Act (5 U.S.C. 552a). Records from this system of records may be disclosed to the Department of Justice to determine whether the Freedom of Information Act requires disclosure of these record s.

2. A record from this system of records may be disclosed, as a routine use, in the course of presenting evidence to a court, magistrate, or administrative tribunal, including disclosures to opposing counsel in the course of settlement negotiations.

3. A record in this system of records may be disclosed, as a routine use, to a Member of Congress submitting a request involving an individual, to whom the record pertains, when the individual has requested assistance from the Member with respect to the subject matter of the record.

4. A record in this system of records may be disclosed, as a routine use, to a contractor of the Agency having need for the information in order to perform a contract. Recipients of information shall be required to comply with the requirements of the Privacy Act of 1974, as amended, pursuant to 5 U.S.C. 552a(m).

5. A record related to an International Application filed under the Patent Cooperation Treaty in this system of records may be disclosed, as a routine use, to the International Bureau of the World Intellectual Property Organization, pursuant to the Patent Cooperation Treaty.

6. A record in this system of records may be disclosed, as a routine use, to another federal agency for purposes of National Security review (35 U.S.C. 181) and for review pursuant to the Atomic Energy Act (42 U.S.C. 218(c)).

7. A record from this system of records may be disclosed, as a routine use, to the Administrator, General Services, or his/her designee, during an inspection of records conducted by GSA as part of that agency's responsibility to recommend improvements in records management practices and programs, under authority of 44 U.S.C. 2904 and 2906. Such disclosure shall be made in accordance with the GSA regulations governing inspection of records for this purpose, and any other relevant (i.e., GSA or Commerce) directive. Such disclosure shall not be used to make determinations about individuals.

8. A record from this system of records may be disclosed, as a routine use, to the public after either publication of the application pursuant to 35 U.S.C. 122(b) or issuance of a patent pursuant to 35 U.S.C. 151. Further, a record may be disclosed, subject to the limitations of 37 CFR 1.14, as a routine use, to the public if the record was filed in an application which became abandoned or in which the proceedings were terminated and which application is referenced by either a published application, an application open to public inspections or an issued patent.

9. A record from this system of records may be disclosed, as a routine use, to a Federal, State, or local law enforcement agency, if the USPTO becomes aware of a violation or potential violation of law or regulation.

Electronic Acknowledgement Receipt

EFS ID:	8365253
Application Number:	09810514
International Application Number:	
Confirmation Number:	6193
Title of Invention:	METHOD AND SYSTEM FOR MANAGING DISTRIBUTOR INFORMATION
First Named Inventor/Applicant Name:	David Chao
Customer Number:	33438
Filer:	Kent Bryan Chambers/Terri Munoz
Filer Authorized By:	Kent Bryan Chambers
Attorney Docket Number:	T00071
Receipt Date:	07-SEP-2010
Filing Date:	15-MAR-2001
Time Stamp:	15:39:00
Application Type:	Utility under 35 USC 111(a)

Payment information:

Submitted with Payment	no

File Listing:

Document Number	Document Description	File Name	File Size(Bytes)/ Message Digest	Multi Part /.zip	Pages (if appl.)
1	Information Disclosure Statement (IDS) Filed (SB/08)	T00071_IDS_9_7_10.pdf	612372 463f291145989a057f601da565510266e057955a	no	4

Warnings:	
Information:	Ex. 1002 556/597

2	NPL Documents	Webster.pdf	293620 2df83b912c22ccf448dfda883ac0fd4bc8644d70	no	2
Warnings:					
Information:					
3	NPL Documents	SC_Commission.pdf	85661 882381b38d61bec9e29cd2f8a39eaa1fe88f10ac	no	3
Warnings:					
Information:					
4	NPL Documents	Selling_Chain.pdf	72163 14c12a58171f12e9950b343b0cf5823ca462ee44	no	2
Warnings:					
Information:					
5	NPL Documents	Zipform.pdf	1100901 1dd07c7f7afa6d8f9ce672f193e93d0441b1d7d2	no	23
Warnings:					
Information:					
			Total Files Size (in bytes):	2164717	

This Acknowledgement Receipt evidences receipt on the noted date by the USPTO of the indicated documents, characterized by the applicant, and including page counts, where applicable. It serves as evidence of receipt similar to a Post Card, as described in MPEP 503.

New Applications Under 35 U.S.C. 111

If a new application is being filed and the application includes the necessary components for a filing date (see 37 CFR 1.53(b)-(d) and MPEP 506), a Filing Receipt (37 CFR 1.54) will be issued in due course and the date shown on this Acknowledgement Receipt will establish the filing date of the application.

National Stage of an International Application under 35 U.S.C. 371

If a timely submission to enter the national stage of an international application is compliant with the conditions of 35 U.S.C. 371 and other applicable requirements a Form PCT/DO/EO/903 indicating acceptance of the application as a national stage submission under 35 U.S.C. 371 will be issued in addition to the Filing Receipt, in due course.

New International Application Filed with the USPTO as a Receiving Office

If a new international application is being filed and the international application includes the necessary components for an international filing date (see PCT Article 11 and MPEP 1810), a Notification of the International Application Number and of the International Filing Date (Form PCT/RO/105) will be issued in due course, subject to prescriptions concerning national security, and the date shown on this Acknowledgement Receipt will establish the international filing date of the application.

UNITED STATES PATENT AND TRADEMARK OFFICE

UNITED STATES DEPARTMENT OF COMMERCE
United States Patent and Trademark Office
Address: COMMISSIONER FOR PATENTS
P.O. Box 1450
Alexandria, Virginia 22313-1450
www.uspto.gov

NOTICE OF ALLOWANCE AND FEE(S) DUE

33438 7590 10/04/2010

HAMILTON & TERRILE, LLP
P.O. BOX 203518
AUSTIN, TX 78720

EXAMINER	
RUDY, ANDREW J	
ART UNIT	PAPER NUMBER
3687	

DATE MAILED: 10/04/2010

APPLICATION NO.	FILING DATE	FIRST NAMED INVENTOR	ATTORNEY DOCKET NO.	CONFIRMATION NO.
09/810,514	03/15/2001	David Chao	T00071	6193

TITLE OF INVENTION: METHOD AND SYSTEM FOR MANAGING DISTRIBUTOR INFORMATION

APPLN. TYPE	SMALL ENTITY	ISSUE FEE DUE	PUBLICATION FEE DUE	PREV. PAID ISSUE FEE	TOTAL FEE(S) DUE	DATE DUE
nonprovisional	NO	$1510	$300	$0	$1810	01/04/2011

THE APPLICATION IDENTIFIED ABOVE HAS BEEN EXAMINED AND IS ALLOWED FOR ISSUANCE AS A PATENT. PROSECUTION ON THE MERITS IS CLOSED. THIS NOTICE OF ALLOWANCE IS NOT A GRANT OF PATENT RIGHTS. THIS APPLICATION IS SUBJECT TO WITHDRAWAL FROM ISSUE AT THE INITIATIVE OF THE OFFICE OR UPON PETITION BY THE APPLICANT. SEE 37 CFR 1.313 AND MPEP 1308.

THE ISSUE FEE AND PUBLICATION FEE (IF REQUIRED) MUST BE PAID WITHIN THREE MONTHS FROM THE MAILING DATE OF THIS NOTICE OR THIS APPLICATION SHALL BE REGARDED AS ABANDONED. THIS STATUTORY PERIOD CANNOT BE EXTENDED. SEE 35 U.S.C. 151. THE ISSUE FEE DUE INDICATED ABOVE DOES NOT REFLECT A CREDIT FOR ANY PREVIOUSLY PAID ISSUE FEE IN THIS APPLICATION. IF AN ISSUE FEE HAS PREVIOUSLY BEEN PAID IN THIS APPLICATION (AS SHOWN ABOVE), THE RETURN OF PART B OF THIS FORM WILL BE CONSIDERED A REQUEST TO REAPPLY THE PREVIOUSLY PAID ISSUE FEE TOWARD THE ISSUE FEE NOW DUE.

HOW TO REPLY TO THIS NOTICE:

I. Review the SMALL ENTITY status shown above.

If the SMALL ENTITY is shown as YES, verify your current SMALL ENTITY status:

A. If the status is the same, pay the TOTAL FEE(S) DUE shown above.

B. If the status above is to be removed, check box 5b on Part B - Fee(s) Transmittal and pay the PUBLICATION FEE (if required) and twice the amount of the ISSUE FEE shown above, or

If the SMALL ENTITY is shown as NO:

A. Pay TOTAL FEE(S) DUE shown above, or

B. If applicant claimed SMALL ENTITY status before, or is now claiming SMALL ENTITY status, check box 5a on Part B - Fee(s) Transmittal and pay the PUBLICATION FEE (if required) and 1/2 the ISSUE FEE shown above.

II. PART B - FEE(S) TRANSMITTAL, or its equivalent, must be completed and returned to the United States Patent and Trademark Office (USPTO) with your ISSUE FEE and PUBLICATION FEE (if required). If you are charging the fee(s) to your deposit account, section "4b" of Part B - Fee(s) Transmittal should be completed and an extra copy of the form should be submitted. If an equivalent of Part B is filed, a request to reapply a previously paid issue fee must be clearly made, and delays in processing may occur due to the difficulty in recognizing the paper as an equivalent of Part B.

III. All communications regarding this application must give the application number. Please direct all communications prior to issuance to Mail Stop ISSUE FEE unless advised to the contrary.

IMPORTANT REMINDER: Utility patents issuing on applications filed on or after Dec. 12, 1980 may require payment of maintenance fees. It is patentee's responsibility to ensure timely payment of maintenance fees when due.

Ex. 1002 558/597

PART B - FEE(S) TRANSMITTAL

Complete and send this form, together with applicable fee(s), to: Mail **Mail Stop ISSUE FEE**
Commissioner for Patents
P.O. Box 1450
Alexandria, Virginia 22313-1450
or Fax (571)-273-2885

INSTRUCTIONS: This form should be used for transmitting the ISSUE FEE and PUBLICATION FEE (if required). Blocks 1 through 5 should be completed where appropriate. All further correspondence including the Patent, advance orders and notification of maintenance fees will be mailed to the current correspondence address as indicated unless corrected below or directed otherwise in Block 1, by (a) specifying a new correspondence address; and/or (b) indicating a separate "FEE ADDRESS" for maintenance fee notifications.

CURRENT CORRESPONDENCE ADDRESS (Note: Use Block 1 for any change of address)

33438 7590 10/04/2010

HAMILTON & TERRILE, LLP
P.O. BOX 203518
AUSTIN, TX 78720

Note: A certificate of mailing can only be used for domestic mailings of the Fee(s) Transmittal. This certificate cannot be used for any other accompanying papers. Each additional paper, such as an assignment or formal drawing, must have its own certificate of mailing or transmission.

Certificate of Mailing or Transmission

I hereby certify that this Fee(s) Transmittal is being deposited with the United States Postal Service with sufficient postage for first class mail in an envelope addressed to the Mail Stop ISSUE FEE address above, or being facsimile transmitted to the USPTO (571) 273-2885, on the date indicated below.

(Depositor's name)
(Signature)
(Date)

APPLICATION NO.	FILING DATE	FIRST NAMED INVENTOR	ATTORNEY DOCKET NO.	CONFIRMATION NO.
09/810,514	03/15/2001	David Chao	T00071	6193

TITLE OF INVENTION: METHOD AND SYSTEM FOR MANAGING DISTRIBUTOR INFORMATION

APPLN. TYPE	SMALL ENTITY	ISSUE FEE DUE	PUBLICATION FEE DUE	PREV. PAID ISSUE FEE	TOTAL FEE(S) DUE	DATE DUE
nonprovisional	NO	$1510	$300	$0	$1810	01/04/2011

EXAMINER	ART UNIT	CLASS-SUBCLASS
RUDY, ANDREW J	3687	707-945000

1. Change of correspondence address or indication of "Fee Address" (37 CFR 1.363).

❑ Change of correspondence address (or Change of Correspondence Address form PTO/SB/122) attached.

❑ "Fee Address" indication (or "Fee Address" Indication form PTO/SB/47; Rev 03-02 or more recent) attached. **Use of a Customer Number is required.**

2. For printing on the patent front page, list

(1) the names of up to 3 registered patent attorneys or agents OR, alternatively,

(2) the name of a single firm (having as a member a registered attorney or agent) and the names of up to 2 registered patent attorneys or agents. If no name is listed, no name will be printed.

1 _____

2 _____

3 _____

3. ASSIGNEE NAME AND RESIDENCE DATA TO BE PRINTED ON THE PATENT (print or type)

PLEASE NOTE: Unless an assignee is identified below, no assignee data will appear on the patent. If an assignee is identified below, the document has been filed for recordation as set forth in 37 CFR 3.11. Completion of this form is NOT a substitute for filing an assignment.

(A) NAME OF ASSIGNEE (B) RESIDENCE: (CITY and STATE OR COUNTRY)

Please check the appropriate assignee category or categories (will not be printed on the patent) : ❑ Individual ❑ Corporation or other private group entity ❑ Government

4a. The following fee(s) are submitted:

❑ Issue Fee

❑ Publication Fee (No small entity discount permitted)

❑ Advance Order - # of Copies _____

4b. Payment of Fee(s): **(Please first reapply any previously paid issue fee shown above)**

❑ A check is enclosed.

❑ Payment by credit card. Form PTO-2038 is attached.

❑ The Director is hereby authorized to charge the required fee(s), any deficiency, or credit any overpayment, to Deposit Account Number _____ (enclose an extra copy of this form).

5. **Change in Entity Status** (from status indicated above)

❑ a. Applicant claims SMALL ENTITY status. See 37 CFR 1.27.

❑ b. Applicant is no longer claiming SMALL ENTITY status. See 37 CFR 1.27(g)(2).

NOTE: The Issue Fee and Publication Fee (if required) will not be accepted from anyone other than the applicant; a registered attorney or agent; or the assignee or other party in interest as shown by the records of the United States Patent and Trademark Office.

Authorized Signature _____ Date _____

Typed or printed name _____ Registration No. _____

This collection of information is required by 37 CFR 1.311. The information is required to obtain or retain a benefit by the public which is to file (and by the USPTO to process) an application. Confidentiality is governed by 35 U.S.C. 122 and 37 CFR 1.14. This collection is estimated to take 12 minutes to complete, including gathering, preparing, and submitting the completed application form to the USPTO. Time will vary depending upon the individual case. Any comments on the amount of time you require to complete this form and/or suggestions for reducing this burden, should be sent to the Chief Information Officer, U.S. Patent and Trademark Office, U.S. Department of Commerce, P.O. Box 1450, Alexandria, Virginia 22313-1450. DO NOT SEND FEES OR COMPLETED FORMS TO THIS ADDRESS. SEND TO: Commissioner for Patents, P.O. Box 1450, Alexandria, Virginia 22313-1450.

Under the Paperwork Reduction Act of 1995, no persons are required to respond to a collection of information unless it displays a valid OMB control number.

UNITED STATES PATENT AND TRADEMARK OFFICE

UNITED STATES DEPARTMENT OF COMMERCE
United States Patent and Trademark Office
Address: COMMISSIONER FOR PATENTS
P.O. Box 1450
Alexandria, Virginia 22313-1450
www.uspto.gov

APPLICATION NO.	FILING DATE	FIRST NAMED INVENTOR	ATTORNEY DOCKET NO.	CONFIRMATION NO.
09/810,514	03/15/2001	David Chao	T00071	6193

33438 7590 10/04/2010

HAMILTON & TERRILE, LLP
P.O. BOX 203518
AUSTIN, TX 78720

EXAMINER	
RUDY, ANDREW J	
ART UNIT	PAPER NUMBER
3687	

DATE MAILED: 10/04/2010

Determination of Patent Term Adjustment under 35 U.S.C. 154 (b)

(application filed on or after May 29, 2000)

The Patent Term Adjustment to date is 269 day(s). If the issue fee is paid on the date that is three months after the mailing date of this notice and the patent issues on the Tuesday before the date that is 28 weeks (six and a half months) after the mailing date of this notice, the Patent Term Adjustment will be 269 day(s).

If a Continued Prosecution Application (CPA) was filed in the above-identified application, the filing date that determines Patent Term Adjustment is the filing date of the most recent CPA.

Applicant will be able to obtain more detailed information by accessing the Patent Application Information Retrieval (PAIR) WEB site (http://pair.uspto.gov).

Any questions regarding the Patent Term Extension or Adjustment determination should be directed to the Office of Patent Legal Administration at (571)-272-7702. Questions relating to issue and publication fee payments should be directed to the Customer Service Center of the Office of Patent Publication at 1-(888)-786-0101 or (571)-272-4200.

Ex. 1002 560/597

Notice of Allowability	Application No.	Applicant(s)	
	09/810,514	CHAO ET AL.	
	Examiner	Art Unit	
	Andrew Joseph Rudy	3687	

-- The MAILING DATE of this communication appears on the cover sheet with the correspondence address--

All claims being allowable, PROSECUTION ON THE MERITS IS (OR REMAINS) CLOSED in this application. If not included herewith (or previously mailed), a Notice of Allowance (PTOL-85) or other appropriate communication will be mailed in due course. **THIS NOTICE OF ALLOWABILITY IS NOT A GRANT OF PATENT RIGHTS.** This application is subject to withdrawal from issue at the initiative of the Office or upon petition by the applicant. See 37 CFR 1.313 and MPEP 1308.

1. ☒ This communication is responsive to *the 03 September 2010 RCE*.

2. ☒ The allowed claim(s) is/are *1-42 and 65-68*.

3. ☐ Acknowledgment is made of a claim for foreign priority under 35 U.S.C. § 119(a)-(d) or (f).
   a) ☐ All b) ☐ Some* c) ☐ None of the:
      1. ☐ Certified copies of the priority documents have been received.
      2. ☐ Certified copies of the priority documents have been received in Application No. _____ .
      3. ☐ Copies of the certified copies of the priority documents have been received in this national stage application from the International Bureau (PCT Rule 17.2(a)).

   * Certified copies not received: _____.

Applicant has THREE MONTHS FROM THE "MAILING DATE" of this communication to file a reply complying with the requirements noted below. Failure to timely comply will result in ABANDONMENT of this application.
THIS THREE-MONTH PERIOD IS NOT EXTENDABLE.

4. ☐ A SUBSTITUTE OATH OR DECLARATION must be submitted. Note the attached EXAMINER'S AMENDMENT or NOTICE OF INFORMAL PATENT APPLICATION (PTO-152) which gives reason(s) why the oath or declaration is deficient.

5. ☐ CORRECTED DRAWINGS (as "replacement sheets") must be submitted.
   (a) ☐ including changes required by the Notice of Draftsperson's Patent Drawing Review (PTO-948) attached
      1) ☐ hereto or 2) ☐ to Paper No./Mail Date _____.
   (b) ☐ including changes required by the attached Examiner's Amendment / Comment or in the Office action of Paper No./Mail Date _____.

   Identifying indicia such as the application number (see 37 CFR 1.84(c)) should be written on the drawings in the front (not the back) of each sheet. Replacement sheet(s) should be labeled as such in the header according to 37 CFR 1.121(d).

6. ☐ DEPOSIT OF and/or INFORMATION about the deposit of BIOLOGICAL MATERIAL must be submitted. Note the attached Examiner's comment regarding REQUIREMENT FOR THE DEPOSIT OF BIOLOGICAL MATERIAL.

Attachment(s)

1. ☐ Notice of References Cited (PTO-892)
2. ☐ Notice of Draftperson's Patent Drawing Review (PTO-948)
3. ☒ Information Disclosure Statements (PTO/SB/08), Paper No./Mail Date _____
4. ☐ Examiner's Comment Regarding Requirement for Deposit of Biological Material
5. ☐ Notice of Informal Patent Application
6. ☐ Interview Summary (PTO-413), Paper No./Mail Date _____ .
7. ☒ Examiner's Amendment/Comment
8. ☐ Examiner's Statement of Reasons for Allowance
9. ☐ Other _____.

DETAILED ACTION

Continued Examination Under 37 CFR 1.114

1. A request for continued examination under 37 CFR 1.114, including the fee set forth in 37 CFR 1.17(e), was filed in this application after allowance or after an Office action under *Ex Parte Quayle*, 25 USPQ 74, 453 O.G. 213 (Comm'r Pat. 1935). Since this application is eligible for continued examination under 37 CFR 1.114, and the fee set forth in 37 CFR 1.17(e) has been timely paid, prosecution in this application has been reopened pursuant to 37 CFR 1.114. Applicant's submission filed on September 7, 2010 has been entered.

2. Applicant previously cancelled claims 43-64 from the September 4, 2007 Amendment.

3. It is noted the Examiner's Amendment from the July 29, 2010 Office Action is still in force. Thus, claim 2 depends from claim 1.

4. Applicant's Information Disclosure Statements (IDS's) submitted September 3, 2010 and September 7, 2010 have been reviewed. Note the attached IDS's.

Allowable Subject Matter

5. Claims 1-42 and 65-68 are allowed.

6. Any inquiry concerning this communication or earlier communications from the examiner should be directed to Andrew Joseph Rudy whose telephone number is 571-272-6789. The examiner can normally be reached on Monday thru Friday.

If attempts to reach the examiner by telephone are unsuccessful, the examiner's supervisor, Matthew S. Gart can be reached on 571-272-3955. The fax phone number for the organization where this application or proceeding is assigned is 571-273-8300.

Information regarding the status of an application may be obtained from the Patent Application Information Retrieval (PAIR) system. Status information for published applications may be obtained from either Private PAIR or Public PAIR. Status information for unpublished applications is available through Private PAIR only. For more information about the PAIR system, see http://pair-direct.uspto.gov. Should you have questions on access to the Private PAIR system, contact the Electronic Business Center (EBC) at 866-217-9197 (toll-free). If you would like assistance from a USPTO Customer Service Representative or access to the automated information system, call 800-786-9199 (IN USA OR CANADA) or 571-272-1000.

/Andrew Joseph Rudy/
Primary Examiner, Art Unit 3687

Issue Classification	Application/Control No.	Applicant(s)/Patent under Reexamination	
	09/810,514	CHAO ET AL.	
	Examiner	Art Unit	
	Andrew Joseph Rudy	3687	

ISSUE CLASSIFICATION

ORIGINAL			CROSS REFERENCE(S)						
CLASS	SUBCLASS	CLASS	SUBCLASS (ONE SUBCLASS PER BLOCK)						
707	945	235	376						
INTERNATIONAL CLASSIFICATION		705	7						
G 0 6 F	17/30								
	/								
	/								
	/								
	/								

XXXXXXXXXXXXXXXXXXXXXXXXX (Assistant Examiner) (Date)	/Andrew Joseph Rudy/ 9/29/2010 (Primary Examiner) (Date)	**Total Claims Allowed: 46**
(Legal Instruments Examiner) (Date)		O.G. Print Claim(s): 1 / O.G. Print Fig.: 1

☐ **Claims renumbered in the same order as presented by applicant** ☐ CPA ☐ T.D. ☐ R.1.47

Final	Original	Final	Original	Final	Original	Final	Original	Final	Original	Final	Original	Final	Original
1	1	31	31		61		91		121		151		181
2	2	32	32		62		92		122		152		182
3	3	33	33		63		93		123		153		183
4	4	34	34		64		94		124		154		184
5	5	35	35	43	65		95		125		155		185
6	6	36	36	44	66		96		126		156		186
7	7	37	37	45	67		97		127		157		187
8	8	38	38	46	68		98		128		158		188
9	9	39	39		69		99		129		159		189
10	10	40	40		70		100		130		160		190
11	11	41	41		71		101		131		161		191
12	12	42	42		72		102		132		162		192
13	13		43		73		103		133		163		193
14	14		44		74		104		134		164		194
15	15		45		75		105		135		165		195
16	16		46		76		106		136		166		196
17	17		47		77		107		137		167		197
18	18		48		78		108		138		168		198
19	19		49		79		109		139		169		199
20	20		50		80		110		140		170		200
21	21		51		81		111		141		171		201
22	22		52		82		112		142		172		202
23	23		53		83		113		143		173		203
24	24		54		84		114		144		174		204
25	25		55		85		115		145		175		205
26	26		56		86		116		146		176		206
27	27		57		87		117		147		177		207
28	28		58		88		118		148		178		208
29	29		59		89		119		149		179		209
30	30		60		90		120		150		180		210

Search Notes

Application/Control No.	Applicant(s)/Patent under Reexamination	
09/810,514	CHAO ET AL.	
Examiner	**Art Unit**	
Andrew Joseph Rudy	3687	

SEARCHED			
Class	Subclass	Date	Examiner
235	375,376	9/28/2010	AJR
705	7,10,26	9/28/2010	AJR
707	999.001	9/28/2010	AJR
707	999.009	9/28/2010	AJR
707	923,930	9/28/2010	AJR
707	944,945	9/28/2010	AJR
707	950	9/28/2010	AJR
711	1	9/28/2010	AJR

INTERFERENCE SEARCHED			
Class	Subclass	Date	Examiner
707	**945,950**	**9/28/2010**	**AJR**
705	7,10,26	9/28/2010	AJR
235	375,376	9/28/2010	AJR

SEARCH NOTES (INCLUDING SEARCH STRATEGY)		
	DATE	EXMR
Inventor name search conducted.	9/28/2010	AJR
Bibliographic data reviewed.	9/28/2010	AJR
Continuity data reviewed.	9/28/2010	AJR

Doc code: IDS
Doc description: Information Disclosure Statement (IDS) Filed

PTO/SB/08a (01-10)
Approved for use through 07/31/2012. OMB 0651-0031
U.S. Patent and Trademark Office; U.S. DEPARTMENT OF COMMERCE
Under the Paperwork Reduction Act of 1995, no persons are required to respond to a collection of information unless it contains a valid OMB control number.

INFORMATION DISCLOSURE STATEMENT BY APPLICANT

(Not for submission under 37 CFR 1.99)

Application Number	09810514
Filing Date	2001-03-15
First Named Inventor	David Chao
Art Unit	3687
Examiner Name	Andrew J. Rudy
Attorney Docket Number	T00071

U.S.PATENTS Remove

Examiner Initial*	Cite No	Patent Number	Kind Code[1]	Issue Date	Name of Patentee or Applicant of cited Document	Pages,Columns,Lines where Relevant Passages or Relevant Figures Appear
	1					

If you wish to add additional U.S. Patent citation information please click the Add button. Add

U.S.PATENT APPLICATION PUBLICATIONS Remove

Examiner Initial*	Cite No	Publication Number	Kind Code[1]	Publication Date	Name of Patentee or Applicant of cited Document	Pages,Columns,Lines where Relevant Passages or Relevant Figures Appear
/A.R./	1	20020023055	A1	2002-02-21	Antognini et al.	

If you wish to add additional U.S. Published Application citation information please click the Add button. Add

FOREIGN PATENT DOCUMENTS Remove

Examiner Initial*	Cite No	Foreign Document Number[3]	Country Code[2] i	Kind Code[4]	Publication Date	Name of Patentee or Applicant of cited Document	Pages,Columns,Lines where Relevant Passages or Relevant Figures Appear	T[5]
	1							☐

If you wish to add additional Foreign Patent Document citation information please click the Add button Add

NON-PATENT LITERATURE DOCUMENTS Remove

Examiner Initials*	Cite No	Include name of the author (in CAPITAL LETTERS), title of the article (when appropriate), title of the item (book, magazine, journal, serial, symposium, catalog, etc), date, pages(s), volume-issue number(s), publisher, city and/or country where published.	T[5]

INFORMATION DISCLOSURE STATEMENT BY APPLICANT (Not for submission under 37 CFR 1.99)		
	Application Number	09810514
	Filing Date	2001-03-15
	First Named Inventor	David Chao
	Art Unit	3687
	Examiner Name	Andrew J. Rudy
	Attorney Docket Number	T00071

	1		☐

If you wish to add additional non-patent literature document citation information please click the Add button Add

EXAMINER SIGNATURE

Examiner Signature	/Andrew Joseph Rudy/	Date Considered	09/28/2010

*EXAMINER: Initial if reference considered, whether or not citation is in conformance with MPEP 609. Draw line through a citation if not in conformance and not considered. Include copy of this form with next communication to applicant.

[1] See Kind Codes of USPTO Patent Documents at www.USPTO.GOV or MPEP 901.04. [2] Enter office that issued the document, by the two-letter code (WIPO Standard ST.3). [3] For Japanese patent documents, the indication of the year of the reign of the Emperor must precede the serial number of the patent document. [4] Kind of document by the appropriate symbols as indicated on the document under WIPO Standard ST.16 if possible. [5] Applicant is to place a check mark here if English language translation is attached.

Doc code: IDS
Doc description: Information Disclosure Statement (IDS) Filed

PTO/SB/08a (01-10)
Approved for use through 07/31/2012. OMB 0651-0031
U.S. Patent and Trademark Office; U.S. DEPARTMENT OF COMMERCE
Under the Paperwork Reduction Act of 1995, no persons are required to respond to a collection of information unless it contains a valid OMB control number.

INFORMATION DISCLOSURE STATEMENT BY APPLICANT

(Not for submission under 37 CFR 1.99)

Application Number	09810514
Filing Date	2001-03-15
First Named Inventor	David Chao
Art Unit	3687
Examiner Name	Andrew J. Rudy
Attorney Docket Number	T00071

U.S.PATENTS Remove

Examiner Initial*	Cite No	Patent Number	Kind Code[1]	Issue Date	Name of Patentee or Applicant of cited Document	Pages,Columns,Lines where Relevant Passages or Relevant Figures Appear
/A.R./	1	5337263		1994-08-09	Patermaster	
/A.R./	2	6128603		2003-10-03	Dent et al.	
/A.R./	3	6182095	B1	2001-01-30	Leymaster et al.	

If you wish to add additional U.S. Patent citation information please click the Add button. Add

U.S.PATENT APPLICATION PUBLICATIONS Remove

Examiner Initial*	Cite No	Publication Number	Kind Code[1]	Publication Date	Name of Patentee or Applicant of cited Document	Pages,Columns,Lines where Relevant Passages or Relevant Figures Appear
/A.R./	1	20020169678			Chao et al.	

If you wish to add additional U.S. Published Application citation information please click the Add button. Add

FOREIGN PATENT DOCUMENTS Remove

Examiner Initial*	Cite No	Foreign Document Number[3]	Country Code[2] i	Kind Code[4]	Publication Date	Name of Patentee or Applicant of cited Document	Pages,Columns,Lines where Relevant Passages or Relevant Figures Appear	T[5]
	1							☐

INFORMATION DISCLOSURE STATEMENT BY APPLICANT

(Not for submission under 37 CFR 1.99)

Application Number	09810514
Filing Date	2001-03-15
First Named Inventor	David Chao
Art Unit	3687
Examiner Name	Andrew J. Rudy
Attorney Docket Number	T00071

If you wish to add additional Foreign Patent Document citation information please click the Add button [Add]

NON-PATENT LITERATURE DOCUMENTS [Remove]

Examiner Initials*	Cite No	Include name of the author (in CAPITAL LETTERS), title of the article (when appropriate), title of the item (book, magazine, journal, serial, symposium, catalog, etc), date, pages(s), volume-issue number(s), publisher, city and/or country where published.	T[5]
/A.R./	1	Merriam Webster's Dictionary, definition of relationship, Tenth edition.	☐
/A.R./	2	SC Commission [retrieved from the Internet, http://web. Archive.org/web/1997062419305...www.trilogy.com/modules/sccommission on February 4, 2002. The snapshot of this web page was downloaded to web.archive.org on June 24, 1997; however, the page information states that the SC Commission web page was last modified on March 12, 1997.]	☐
/A.R./	3	Selling Chain [retrieved from the Internet, http://web.archive.org/web/19970624190842/www.trilogy.com/products1 on February 4, 2002. The snapshot of this web page was downloaded to web.archive.org on June 24, 1997; however, the page information states that the Selling Chain web page was last modified on March 6, 1997.]	☐
/A.R./	4	Information on ZipForm, 1998-2000, printed through www.archive.org	☐

If you wish to add additional non-patent literature document citation information please click the Add button [Add]

EXAMINER SIGNATURE

Examiner Signature	/Andrew Joseph Rudy/	Date Considered	09/28/2010

*EXAMINER: Initial if reference considered, whether or not citation is in conformance with MPEP 609. Draw line through a citation if not in conformance and not considered. Include copy of this form with next communication to applicant.

[1] See Kind Codes of USPTO Patent Documents at www.USPTO.GOV or MPEP 901.04. [2] Enter office that issued the document, by the two-letter code (WIPO Standard ST.3). [3] For Japanese patent documents, the indication of the year of the reign of the Emperor must precede the serial number of the patent document. [4] Kind of document by the appropriate symbols as indicated on the document under WIPO Standard ST.16 if possible. [5] Applicant is to place a check mark here if English language translation is attached.

PTO/SB/30EFS (07-09)
Approved for use through 07/31/2012. OMB 0651-0031
U.S. Patent and Trademark Office; U.S. DEPARTMENT OF COMMERCE
Under the Paperwork Reduction Act of 1995, no persons are required to respond to a collection of information unless it contains a valid OMB control number.

REQUEST FOR CONTINUED EXAMINATION(RCE)TRANSMITTAL
(Submitted Only via EFS-Web)

Application Number	09/810,514	Filing Date	2001-03-15	Docket Number (if applicable)	T00071	Art Unit	3687
First Named Inventor	David Chao			Examiner Name	Andrew J. Rudy		

This is a Request for Continued Examination (RCE) under 37 CFR 1.114 of the above-identified application.
Request for Continued Examination (RCE) practice under 37 CFR 1.114 does not apply to any utility or plant application filed prior to June 8, 1995, or to any design application. The Instruction Sheet for this form is located at WWW.USPTO.GOV

SUBMISSION REQUIRED UNDER 37 CFR 1.114

Note: If the RCE is proper, any previously filed unentered amendments and amendments enclosed with the RCE will be entered in the order in which they were filed unless applicant instructs otherwise. If applicant does not wish to have any previously filed unentered amendment(s) entered, applicant must request non-entry of such amendment(s).

☐ Previously submitted. If a final Office action is outstanding, any amendments filed after the final Office action may be considered as a submission even if this box is not checked.

- ☐ Consider the arguments in the Appeal Brief or Reply Brief previously filed on _____
- ☐ Other _____

☒ Enclosed

- ☐ Amendment/Reply
- ☒ Information Disclosure Statement (IDS)
- ☐ Affidavit(s)/ Declaration(s)
- ☐ Other _____

MISCELLANEOUS

☐ Suspension of action on the above-identified application is requested under 37 CFR 1.103(c) for a period of months _____
(Period of suspension shall not exceed 3 months; Fee under 37 CFR 1.17(i) required)

☐ Other _____

FEES

☐ **The RCE fee under 37 CFR 1.17(e) is required by 37 CFR 1.114 when the RCE is filed.**
The Director is hereby authorized to charge any underpayment of fees, or credit any overpayments, to Deposit Account No _____

SIGNATURE OF APPLICANT, ATTORNEY, OR AGENT REQUIRED

☒ Patent Practitioner Signature

☐ Applicant Signature

PTO/SB/30EFS (07-09)
Approved for use through 07/31/2012. OMB 0651-0031
U.S. Patent and Trademark Office; U.S. DEPARTMENT OF COMMERCE
Under the Paperwork Reduction Act of 1995, no persons are required to respond to a collection of information unless it contains a valid OMB control number.

Signature of Registered U.S. Patent Practitioner			
Signature	/Kent B. Chambers/	Date (YYYY-MM-DD)	2010-10-15
Name	Kent B. Chambers	Registration Number	38839

This collection of information is required by 37 CFR 1.114. The information is required to obtain or retain a benefit by the public which is to file (and by the USPTO to process) an application. Confidentiality is governed by 35 U.S.C. 122 and 37 CFR 1.11 and 1.14. This collection is estimated to take 12 minutes to complete, including gathering, preparing, and submitting the completed application form to the USPTO. Time will vary depending upon the individual case. Any comments on the amount of time you require to complete this form and/or suggestions for reducing this burden, should be sent to the Chief Information Officer, U.S. Patent and Trademark Office, U.S. Department of Commerce, P.O. Box 1450, Alexandria, VA 22313-1450.

If you need assistance in completing the form, call 1-800-PTO-9199 and select option 2.

PTO/SB/08a (01-10)
Approved for use through 07/31/2012. OMB 0651-0031
U.S. Patent and Trademark Office; U.S. DEPARTMENT OF COMMERCE

Under the Paperwork Reduction Act of 1995, no persons are required to respond to a collection of information unless it contains a valid OMB control number.

INFORMATION DISCLOSURE STATEMENT BY APPLICANT

(**Not for submission under 37 CFR 1.99)**

Application Number	09810514
Filing Date	2001-03-15
First Named Inventor	David Chao
Art Unit	3687
Examiner Name	Andrew J. Rudy
Attorney Docket Number	T00071

U.S.PATENTS

Examiner Initial*	Cite No	Patent Number	Kind Code[1]	Issue Date	Name of Patentee or Applicant of cited Document	Pages,Columns,Lines where Relevant Passages or Relevant Figures Appear
	1	5732263		1998-03-24	Havens et al.	
	2	5832268		1998-11-03	Anderson et al.	
	3	7200749		2007-04-03	Wheeler et al.	
	4	7500272		2009-03-03	Wheeler et al.	

If you wish to add additional U.S. Patent citation information please click the Add button.

U.S.PATENT APPLICATION PUBLICATIONS

Examiner Initial*	Cite No	Publication Number	Kind Code[1]	Publication Date	Name of Patentee or Applicant of cited Document	Pages,Columns,Lines where Relevant Passages or Relevant Figures Appear
	1	20010051917		2001-12-01	Bissonette et al.	
	2	20020091614		2002-07-11	Yehia et al.	

INFORMATION DISCLOSURE STATEMENT BY APPLICANT (**Not for submission under 37 CFR 1.99)**		
	Application Number	09810514
	Filing Date	2001-03-15
	First Named Inventor	David Chao
	Art Unit	3687
	Examiner Name	Andrew J. Rudy
	Attorney Docket Number	T00071

	3	20030018481		2003-01-23	Zhou	

If you wish to add additional U.S. Published Application citation information please click the Add button.

FOREIGN PATENT DOCUMENTS

Examiner Initial*	Cite No	Foreign Document Number[3]	Country Code[2] ¡	Kind Code[4]	Publication Date	Name of Patentee or Applicant of cited Document	Pages,Columns,Lines where Relevant Passages or Relevant Figures Appear	T[5]
	1							☐

If you wish to add additional Foreign Patent Document citation information please click the Add button

NON-PATENT LITERATURE DOCUMENTS

Examiner Initials*	Cite No	Include name of the author (in CAPITAL LETTERS), title of the article (when appropriate), title of the item (book, magazine, journal, serial, symposium, catalog, etc), date, pages(s), volume-issue number(s), publisher, city and/or country where published.	T[5]
	1	Documents for U.S. Patent Application No. 09/810,515 in the U.S.P.T.O.'s Patent Application Information Retrieval (PAIR) system, as of October 13, 2010.	☐
	2	Documents for U.S. Patent Application No. 09/896,144 in the U.S.P.T.O.'s Patent Application Information Retrieval (PAIR) system, as of October 13, 2010.	☐
	3	Documents for U.S. Patent Application No. 09/809,991 in the U.S.P.T.O.'s Patent Application Information Retrieval (PAIR) system, as of October 13, 2010.	☐
	4	Documents for U.S. Patent Application No. 09/810,012 in the U.S.P.T.O.'s Patent Application Information Retrieval (PAIR) system, as of October 13, 2010.	☐
	5	U.S. Provisional Patent Application No. 60/223,076, filed on August 4, 2000 in the U.S. Patent & Trademark Office by Wheeler et al.	☐

If you wish to add additional non-patent literature document citation information please click the Add button

INFORMATION DISCLOSURE STATEMENT BY APPLICANT (**Not for submission under 37 CFR 1.99)**		
	Application Number	09810514
	Filing Date	2001-03-15
	First Named Inventor	David Chao
	Art Unit	3687
	Examiner Name	Andrew J. Rudy
	Attorney Docket Number	T00071

EXAMINER SIGNATURE			
Examiner Signature		Date Considered	

*EXAMINER: Initial if reference considered, whether or not citation is in conformance with MPEP 609. Draw line through a citation if not in conformance and not considered. Include copy of this form with next communication to applicant.

[1] See Kind Codes of USPTO Patent Documents at www.USPTO.GOV or MPEP 901.04. [2] Enter office that issued the document, by the two-letter code (WIPO Standard ST.3). [3] For Japanese patent documents, the indication of the year of the reign of the Emperor must precede the serial number of the patent document. [4] Kind of document by the appropriate symbols as indicated on the document under WIPO Standard ST.16 if possible. [5] Applicant is to place a check mark here if English language translation is attached.

INFORMATION DISCLOSURE STATEMENT BY APPLICANT

(**Not for submission under 37 CFR 1.99)**

Application Number	09810514
Filing Date	2001-03-15
First Named Inventor	David Chao
Art Unit	3687
Examiner Name	Andrew J. Rudy
Attorney Docket Number	T00071

CERTIFICATION STATEMENT

Please see 37 CFR 1.97 and 1.98 to make the appropriate selection(s):

☐ That each item of information contained in the information disclosure statement was first cited in any communication from a foreign patent office in a counterpart foreign application not more than three months prior to the filing of the information disclosure statement. See 37 CFR 1.97(e)(1).

OR

☐ That no item of information contained in the information disclosure statement was cited in a communication from a foreign patent office in a counterpart foreign application, and, to the knowledge of the person signing the certification after making reasonable inquiry, no item of information contained in the information disclosure statement was known to any individual designated in 37 CFR 1.56(c) more than three months prior to the filing of the information disclosure statement. See 37 CFR 1.97(e)(2).

☐ See attached certification statement.

☐ Fee set forth in 37 CFR 1.17 (p) has been submitted herewith.

☒ None

SIGNATURE

A signature of the applicant or representative is required in accordance with CFR 1.33, 10.18. Please see CFR 1.4(d) for the form of the signature.

Signature	/Kent B. Chambers/	Date (YYYY-MM-DD)	2010-10-15
Name/Print	Kent B. Chambers	Registration Number	38839

This collection of information is required by 37 CFR 1.97 and 1.98. The information is required to obtain or retain a benefit by the public which is to file (and by the USPTO to process) an application. Confidentiality is governed by 35 U.S.C. 122 and 37 CFR 1.14. This collection is estimated to take 1 hour to complete, including gathering, preparing and submitting the completed application form to the USPTO. Time will vary depending upon the individual case. Any comments on the amount of time you require to complete this form and/or suggestions for reducing this burden, should be sent to the Chief Information Officer, U.S. Patent and Trademark Office, U.S. Department of Commerce, P.O. Box 1450, Alexandria, VA 22313-1450. DO NOT SEND FEES OR COMPLETED FORMS TO THIS ADDRESS. **SEND TO: Commissioner for Patents, P.O. Box 1450, Alexandria, VA 22313-1450.**

Electronic Patent Application Fee Transmittal

Application Number:	09810514
Filing Date:	15-Mar-2001
Title of Invention:	METHOD AND SYSTEM FOR MANAGING DISTRIBUTOR INFORMATION
First Named Inventor/Applicant Name:	David Chao
Filer:	Kent Bryan Chambers/Nishi Pasarya
Attorney Docket Number:	T00071

Filed as Large Entity

Utility under 35 USC 111(a) Filing Fees

Description	Fee Code	Quantity	Amount	Sub-Total in USD($)
Basic Filing:				
Pages:				
Claims:				
Miscellaneous-Filing:				
Petition:				
Patent-Appeals-and-Interference:				
Post-Allowance-and-Post-Issuance:				
Extension-of-Time:				

Description	Fee Code	Quantity	Amount	Sub-Total in USD($)
Miscellaneous:				
Request for continued examination	1801	1	810	810
		Total in USD ($)		**810**

Electronic Acknowledgement Receipt

EFS ID:	8636446
Application Number:	09810514
International Application Number:	
Confirmation Number:	6193
Title of Invention:	METHOD AND SYSTEM FOR MANAGING DISTRIBUTOR INFORMATION
First Named Inventor/Applicant Name:	David Chao
Customer Number:	33438
Filer:	Kent Bryan Chambers/Nishi Pasarya
Filer Authorized By:	Kent Bryan Chambers
Attorney Docket Number:	T00071
Receipt Date:	15-OCT-2010
Filing Date:	15-MAR-2001
Time Stamp:	15:22:12
Application Type:	Utility under 35 USC 111(a)

Payment information:

Submitted with Payment	yes
Payment Type	Credit Card
Payment was successfully received in RAM	$810
RAM confirmation Number	1603
Deposit Account	502264
Authorized User	CHAMBERS,KENT B

The Director of the USPTO is hereby authorized to charge indicated fees and credit any overpayment as follows:

Charge any Additional Fees required under 37 C.F.R. Section 1.21 (Miscellaneous fees and charges)

File Listing:

Document Number	Document Description	File Name	File Size(Bytes)/ Message Digest	Multi Part /.zip	Pages (if appl.)
1	Request for Continued Examination (RCE)	T00071_RCE_10_15_2010.pdf	36209 57eaf39690f48fb8425690c41215c278f24d94ac	no	2
Warnings:					
This is not a USPTO supplied RCE SB30 form.					
Information:					
2	NPL Documents	T00068_09896144_OAs_ROAs.pdf	9828626 5b99650cd4c32e3df33d9bd3eba84d8519c8c406	no	258
Warnings:					
Information:					
3	NPL Documents	T00070_09810515_OAs_ROAs.pdf	14181111 8a73ac4932b94d794f1d3facfe0a94e25213c416	no	393
Warnings:					
Information:					
4	NPL Documents	T00080_09809991_OAs_ROAs.pdf	8212587 06d76eff3e987ab9c977c72e38000ffb5c0d30deb	no	233
Warnings:					
Information:					
5	NPL Documents	T00081_09810012_OAs_ROAs.pdf	6804081 29b8e31414cb11f185959b6e6ca79047f09080bd	no	188
Warnings:					
Information:					
6	Information Disclosure Statement (IDS) Filed (SB/08)	T00071_IDS_10-15-2010.pdf	33896 1f182b74859370bbd661b9a8372a2b78e0de8dbd	no	4
Warnings:					
Information:					
This is not an USPTO supplied IDS fillable form					
7	NPL Documents	NPL_US60223076.pdf	1501787 4b26adadc04354fac84c2a924362fb0e8f725d31	no	37
Warnings:					
Information:					
8	Fee Worksheet (PTO-875)	fee-info.pdf	30475 65614059c2f4d950a9358c686da9001e2aa416ba	no	2
Warnings:					

Information:	
Total Files Size (in bytes):	40628772

This Acknowledgement Receipt evidences receipt on the noted date by the USPTO of the indicated documents, characterized by the applicant, and including page counts, where applicable. It serves as evidence of receipt similar to a Post Card, as described in MPEP 503.

New Applications Under 35 U.S.C. 111

If a new application is being filed and the application includes the necessary components for a filing date (see 37 CFR 1.53(b)-(d) and MPEP 506), a Filing Receipt (37 CFR 1.54) will be issued in due course and the date shown on this Acknowledgement Receipt will establish the filing date of the application.

National Stage of an International Application under 35 U.S.C. 371

If a timely submission to enter the national stage of an international application is compliant with the conditions of 35 U.S.C. 371 and other applicable requirements a Form PCT/DO/EO/903 indicating acceptance of the application as a national stage submission under 35 U.S.C. 371 will be issued in addition to the Filing Receipt, in due course.

New International Application Filed with the USPTO as a Receiving Office

If a new international application is being filed and the international application includes the necessary components for an international filing date (see PCT Article 11 and MPEP 1810), a Notification of the International Application Number and of the International Filing Date (Form PCT/RO/105) will be issued in due course, subject to prescriptions concerning national security, and the date shown on this Acknowledgement Receipt will establish the international filing date of the application.

UNITED STATES PATENT AND TRADEMARK OFFICE

UNITED STATES DEPARTMENT OF COMMERCE
United States Patent and Trademark Office
Address: COMMISSIONER FOR PATENTS
P.O. Box 1450
Alexandria, Virginia 22313-1450
www.uspto.gov

NOTICE OF ALLOWANCE AND FEE(S) DUE

33438 7590 11/03/2010

HAMILTON & TERRILE, LLP
P.O. BOX 203518
AUSTIN, TX 78720

EXAMINER	
RUDY, ANDREW J	
ART UNIT	PAPER NUMBER
3687	

DATE MAILED: 11/03/2010

APPLICATION NO.	FILING DATE	FIRST NAMED INVENTOR	ATTORNEY DOCKET NO.	CONFIRMATION NO.
09/810,514	03/15/2001	David Chao	T00071	6193

TITLE OF INVENTION: METHOD AND SYSTEM FOR MANAGING DISTRIBUTOR INFORMATION

APPLN. TYPE	SMALL ENTITY	ISSUE FEE DUE	PUBLICATION FEE DUE	PREV. PAID ISSUE FEE	TOTAL FEE(S) DUE	DATE DUE
nonprovisional	NO	$1510	$300	$0	$1810	02/03/2011

THE APPLICATION IDENTIFIED ABOVE HAS BEEN EXAMINED AND IS ALLOWED FOR ISSUANCE AS A PATENT. PROSECUTION ON THE MERITS IS CLOSED. THIS NOTICE OF ALLOWANCE IS NOT A GRANT OF PATENT RIGHTS. THIS APPLICATION IS SUBJECT TO WITHDRAWAL FROM ISSUE AT THE INITIATIVE OF THE OFFICE OR UPON PETITION BY THE APPLICANT. SEE 37 CFR 1.313 AND MPEP 1308.

THE ISSUE FEE AND PUBLICATION FEE (IF REQUIRED) MUST BE PAID WITHIN THREE MONTHS FROM THE MAILING DATE OF THIS NOTICE OR THIS APPLICATION SHALL BE REGARDED AS ABANDONED. THIS STATUTORY PERIOD CANNOT BE EXTENDED. SEE 35 U.S.C. 151. THE ISSUE FEE DUE INDICATED ABOVE DOES NOT REFLECT A CREDIT FOR ANY PREVIOUSLY PAID ISSUE FEE IN THIS APPLICATION. IF AN ISSUE FEE HAS PREVIOUSLY BEEN PAID IN THIS APPLICATION (AS SHOWN ABOVE), THE RETURN OF PART B OF THIS FORM WILL BE CONSIDERED A REQUEST TO REAPPLY THE PREVIOUSLY PAID ISSUE FEE TOWARD THE ISSUE FEE NOW DUE.

HOW TO REPLY TO THIS NOTICE:

I. Review the SMALL ENTITY status shown above.

If the SMALL ENTITY is shown as YES, verify your current SMALL ENTITY status:

A. If the status is the same, pay the TOTAL FEE(S) DUE shown above.

B. If the status above is to be removed, check box 5b on Part B - Fee(s) Transmittal and pay the PUBLICATION FEE (if required) and twice the amount of the ISSUE FEE shown above, or

If the SMALL ENTITY is shown as NO:

A. Pay TOTAL FEE(S) DUE shown above, or

B. If applicant claimed SMALL ENTITY status before, or is now claiming SMALL ENTITY status, check box 5a on Part B - Fee(s) Transmittal and pay the PUBLICATION FEE (if required) and 1/2 the ISSUE FEE shown above.

II. PART B - FEE(S) TRANSMITTAL, or its equivalent, must be completed and returned to the United States Patent and Trademark Office (USPTO) with your ISSUE FEE and PUBLICATION FEE (if required). If you are charging the fee(s) to your deposit account, section "4b" of Part B - Fee(s) Transmittal should be completed and an extra copy of the form should be submitted. If an equivalent of Part B is filed, a request to reapply a previously paid issue fee must be clearly made, and delays in processing may occur due to the difficulty in recognizing the paper as an equivalent of Part B.

III. All communications regarding this application must give the application number. Please direct all communications prior to issuance to Mail Stop ISSUE FEE unless advised to the contrary.

IMPORTANT REMINDER: Utility patents issuing on applications filed on or after Dec. 12, 1980 may require payment of maintenance fees. It is patentee's responsibility to ensure timely payment of maintenance fees when due.

EX. 1002 581/597

PART B - FEE(S) TRANSMITTAL

Complete and send this form, together with applicable fee(s), to: Mail **Mail Stop ISSUE FEE**
Commissioner for Patents
P.O. Box 1450
Alexandria, Virginia 22313-1450
or Fax (571)-273-2885

INSTRUCTIONS: This form should be used for transmitting the ISSUE FEE and PUBLICATION FEE (if required). Blocks 1 through 5 should be completed where appropriate. All further correspondence including the Patent, advance orders and notification of maintenance fees will be mailed to the current correspondence address as indicated unless corrected below or directed otherwise in Block 1, by (a) specifying a new correspondence address; and/or (b) indicating a separate "FEE ADDRESS" for maintenance fee notifications.

CURRENT CORRESPONDENCE ADDRESS (Note: Use Block 1 for any change of address)

33438 7590 11/03/2010

HAMILTON & TERRILE, LLP
P.O. BOX 203518
AUSTIN, TX 78720

Note: A certificate of mailing can only be used for domestic mailings of the Fee(s) Transmittal. This certificate cannot be used for any other accompanying papers. Each additional paper, such as an assignment or formal drawing, must have its own certificate of mailing or transmission.

Certificate of Mailing or Transmission

I hereby certify that this Fee(s) Transmittal is being deposited with the United States Postal Service with sufficient postage for first class mail in an envelope addressed to the Mail Stop ISSUE FEE address above, or being facsimile transmitted to the USPTO (571) 273-2885, on the date indicated below.

(Depositor's name)
(Signature)
(Date)

APPLICATION NO.	FILING DATE	FIRST NAMED INVENTOR	ATTORNEY DOCKET NO.	CONFIRMATION NO.
09/810,514	03/15/2001	David Chao	T00071	6193

TITLE OF INVENTION: METHOD AND SYSTEM FOR MANAGING DISTRIBUTOR INFORMATION

APPLN. TYPE	SMALL ENTITY	ISSUE FEE DUE	PUBLICATION FEE DUE	PREV. PAID ISSUE FEE	TOTAL FEE(S) DUE	DATE DUE
nonprovisional	NO	$1510	$300	$0	$1810	02/03/2011

EXAMINER	ART UNIT	CLASS-SUBCLASS
RUDY, ANDREW J	3687	707-945000

1. Change of correspondence address or indication of "Fee Address" (37 CFR 1.363).

❑ Change of correspondence address (or Change of Correspondence Address form PTO/SB/122) attached.

❑ "Fee Address" indication (or "Fee Address" Indication form PTO/SB/47; Rev 03-02 or more recent) attached. **Use of a Customer Number is required.**

2. For printing on the patent front page, list

(1) the names of up to 3 registered patent attorneys or agents OR, alternatively,

(2) the name of a single firm (having as a member a registered attorney or agent) and the names of up to 2 registered patent attorneys or agents. If no name is listed, no name will be printed.

1 _____

2 _____

3 _____

3. ASSIGNEE NAME AND RESIDENCE DATA TO BE PRINTED ON THE PATENT (print or type)

PLEASE NOTE: Unless an assignee is identified below, no assignee data will appear on the patent. If an assignee is identified below, the document has been filed for recordation as set forth in 37 CFR 3.11. Completion of this form is NOT a substitute for filing an assignment.

(A) NAME OF ASSIGNEE (B) RESIDENCE: (CITY and STATE OR COUNTRY)

Please check the appropriate assignee category or categories (will not be printed on the patent) : ❑ Individual ❑ Corporation or other private group entity ❑ Government

4a. The following fee(s) are submitted:

❑ Issue Fee

❑ Publication Fee (No small entity discount permitted)

❑ Advance Order - # of Copies _____

4b. Payment of Fee(s): **(Please first reapply any previously paid issue fee shown above)**

❑ A check is enclosed.

❑ Payment by credit card. Form PTO-2038 is attached.

❑ The Director is hereby authorized to charge the required fee(s), any deficiency, or credit any overpayment, to Deposit Account Number _____ (enclose an extra copy of this form).

5. **Change in Entity Status** (from status indicated above)

❑ a. Applicant claims SMALL ENTITY status. See 37 CFR 1.27.

❑ b. Applicant is no longer claiming SMALL ENTITY status. See 37 CFR 1.27(g)(2).

NOTE: The Issue Fee and Publication Fee (if required) will not be accepted from anyone other than the applicant; a registered attorney or agent; or the assignee or other party in interest as shown by the records of the United States Patent and Trademark Office.

Authorized Signature _____ Date _____

Typed or printed name _____ Registration No. _____

This collection of information is required by 37 CFR 1.311. The information is required to obtain or retain a benefit by the public which is to file (and by the USPTO to process) an application. Confidentiality is governed by 35 U.S.C. 122 and 37 CFR 1.14. This collection is estimated to take 12 minutes to complete, including gathering, preparing, and submitting the completed application form to the USPTO. Time will vary depending upon the individual case. Any comments on the amount of time you require to complete this form and/or suggestions for reducing this burden, should be sent to the Chief Information Officer, U.S. Patent and Trademark Office, U.S. Department of Commerce, P.O. Box 1450, Alexandria, Virginia 22313-1450. DO NOT SEND FEES OR COMPLETED FORMS TO THIS ADDRESS. SEND TO: Commissioner for Patents, P.O. Box 1450, Alexandria, Virginia 22313-1450.

Under the Paperwork Reduction Act of 1995, no persons are required to respond to a collection of information unless it displays a valid OMB control number.

UNITED STATES PATENT AND TRADEMARK OFFICE

UNITED STATES DEPARTMENT OF COMMERCE
United States Patent and Trademark Office
Address: COMMISSIONER FOR PATENTS
P.O. Box 1450
Alexandria, Virginia 22313-1450
www.uspto.gov

APPLICATION NO.	FILING DATE	FIRST NAMED INVENTOR	ATTORNEY DOCKET NO.	CONFIRMATION NO.
09/810,514	03/15/2001	David Chao	T00071	6193

33438 7590 11/03/2010

HAMILTON & TERRILE, LLP
P.O. BOX 203518
AUSTIN, TX 78720

EXAMINER	
RUDY, ANDREW J	
ART UNIT	PAPER NUMBER
3687	

DATE MAILED: 11/03/2010

Determination of Patent Term Adjustment under 35 U.S.C. 154 (b)

(application filed on or after May 29, 2000)

The Patent Term Adjustment to date is 269 day(s). If the issue fee is paid on the date that is three months after the mailing date of this notice and the patent issues on the Tuesday before the date that is 28 weeks (six and a half months) after the mailing date of this notice, the Patent Term Adjustment will be 269 day(s).

If a Continued Prosecution Application (CPA) was filed in the above-identified application, the filing date that determines Patent Term Adjustment is the filing date of the most recent CPA.

Applicant will be able to obtain more detailed information by accessing the Patent Application Information Retrieval (PAIR) WEB site (http://pair.uspto.gov).

Any questions regarding the Patent Term Extension or Adjustment determination should be directed to the Office of Patent Legal Administration at (571)-272-7702. Questions relating to issue and publication fee payments should be directed to the Customer Service Center of the Office of Patent Publication at 1-(888)-786-0101 or (571)-272-4200.

Ex. 1002 583/597

Notice of Allowability	Application No.	Applicant(s)	
	09/810,514	CHAO ET AL.	
	Examiner	Art Unit	
	Andrew Joseph Rudy	3687	

-- The MAILING DATE of this communication appears on the cover sheet with the correspondence address--

All claims being allowable, PROSECUTION ON THE MERITS IS (OR REMAINS) CLOSED in this application. If not included herewith (or previously mailed), a Notice of Allowance (PTOL-85) or other appropriate communication will be mailed in due course. **THIS NOTICE OF ALLOWABILITY IS NOT A GRANT OF PATENT RIGHTS.** This application is subject to withdrawal from issue at the initiative of the Office or upon petition by the applicant. See 37 CFR 1.313 and MPEP 1308.

1. ☒ This communication is responsive to *15 October 2010 RCE*.

2. ☒ The allowed claim(s) is/are *1-42 and 65-68*.

3. ☐ Acknowledgment is made of a claim for foreign priority under 35 U.S.C. § 119(a)-(d) or (f).
   a) ☐ All b) ☐ Some* c) ☐ None of the:
      1. ☐ Certified copies of the priority documents have been received.
      2. ☐ Certified copies of the priority documents have been received in Application No. _____ .
      3. ☐ Copies of the certified copies of the priority documents have been received in this national stage application from the International Bureau (PCT Rule 17.2(a)).

   * Certified copies not received: _____.

Applicant has THREE MONTHS FROM THE "MAILING DATE" of this communication to file a reply complying with the requirements noted below. Failure to timely comply will result in ABANDONMENT of this application.
THIS THREE-MONTH PERIOD IS NOT EXTENDABLE.

4. ☐ A SUBSTITUTE OATH OR DECLARATION must be submitted. Note the attached EXAMINER'S AMENDMENT or NOTICE OF INFORMAL PATENT APPLICATION (PTO-152) which gives reason(s) why the oath or declaration is deficient.

5. ☐ CORRECTED DRAWINGS (as "replacement sheets") must be submitted.
   (a) ☐ including changes required by the Notice of Draftsperson's Patent Drawing Review (PTO-948) attached
      1) ☐ hereto or 2) ☐ to Paper No./Mail Date _____.
   (b) ☐ including changes required by the attached Examiner's Amendment / Comment or in the Office action of Paper No./Mail Date _____.

   Identifying indicia such as the application number (see 37 CFR 1.84(c)) should be written on the drawings in the front (not the back) of each sheet. Replacement sheet(s) should be labeled as such in the header according to 37 CFR 1.121(d).

6. ☐ DEPOSIT OF and/or INFORMATION about the deposit of BIOLOGICAL MATERIAL must be submitted. Note the attached Examiner's comment regarding REQUIREMENT FOR THE DEPOSIT OF BIOLOGICAL MATERIAL.

Attachment(s)

1. ☐ Notice of References Cited (PTO-892)
2. ☐ Notice of Draftperson's Patent Drawing Review (PTO-948)
3. ☒ Information Disclosure Statements (PTO/SB/08), Paper No./Mail Date _____
4. ☐ Examiner's Comment Regarding Requirement for Deposit of Biological Material
5. ☐ Notice of Informal Patent Application
6. ☐ Interview Summary (PTO-413), Paper No./Mail Date _____ .
7. ☒ Examiner's Amendment/Comment
8. ☐ Examiner's Statement of Reasons for Allowance
9. ☐ Other _____.

DETAILED ACTION

Continued Examination Under 37 CFR 1.114

1. A request for continued examination under 37 CFR 1.114, including the fee set forth in 37 CFR 1.17(e), was filed in this application after allowance or after an Office action under *Ex Parte Quayle*, 25 USPQ 74, 453 O.G. 213 (Comm'r Pat. 1935). Since this application is eligible for continued examination under 37 CFR 1.114, and the fee set forth in 37 CFR 1.17(e) has been timely paid, prosecution in this application has been reopened pursuant to 37 CFR 1.114. Applicant's submission filed on October 15, 2010 has been entered.

2. Applicant's Information Disclosure Statement (IDS) received October 15, 2010 has been reviewed. Note the attached IDS.

3. Applicant previously cancelled claims 43-64.

Allowable Subject Matter

4. Claims 1-42 and 65-68 are allowed.

5. It is noted the July 29, 2010 Examiner's Amendment (PAPER 20100727) regarding claim 2 is still in full force.

6. Any inquiry concerning this communication or earlier communications from the examiner should be directed to Andrew Joseph Rudy whose telephone number is 571-272-6789. The examiner can normally be reached on Monday thru Friday.

If attempts to reach the examiner by telephone are unsuccessful, the examiner's supervisor, Matthew S. Gart can be reached on 571-272-3955. The fax phone number for the organization where this application or proceeding is assigned is 571-273-8300.

Information regarding the status of an application may be obtained from the Patent Application Information Retrieval (PAIR) system. Status information for published applications may be obtained from either Private PAIR or Public PAIR. Status information for unpublished applications is available through Private PAIR only. For more information about the PAIR system, see http://pair-direct.uspto.gov. Should you have questions on access to the Private PAIR system, contact the Electronic Business Center (EBC) at 866-217-9197 (toll-free). If you would like assistance from a USPTO Customer Service Representative or access to the automated information system, call 800-786-9199 (IN USA OR CANADA) or 571-272-1000.

/Andrew Joseph Rudy/

Primary Examiner, Art Unit 3687

Doc code: IDS
Doc description: Information Disclosure Statement (IDS) Filed

PTO/SB/08a (01-10)
Approved for use through 07/31/2012. OMB 0651-0031
U.S. Patent and Trademark Office; U.S. DEPARTMENT OF COMMERCE
Under the Paperwork Reduction Act of 1995, no persons are required to respond to a collection of information unless it contains a valid OMB control number.

INFORMATION DISCLOSURE STATEMENT BY APPLICANT

(Not for submission under 37 CFR 1.99)

Application Number	09810514
Filing Date	2001-03-15
First Named Inventor	David Chao
Art Unit	3687
Examiner Name	Andrew J. Rudy
Attorney Docket Number	T00071

U.S.PATENTS

Examiner Initial*	Cite No	Patent Number	Kind Code[1]	Issue Date	Name of Patentee or Applicant of cited Document	Pages,Columns,Lines where Relevant Passages or Relevant Figures Appear
/A.R./	1	5732263		1998-03-24	Havens et al.	
/A.R./	2	5832268		1998-11-03	Anderson et al.	
/A.R./	3	7200749		2007-04-03	Wheeler et al.	
/A.R./	4	7500272		2009-03-03	Wheeler et al.	

If you wish to add additional U.S. Patent citation information please click the Add button.

U.S.PATENT APPLICATION PUBLICATIONS

Examiner Initial*	Cite No	Publication Number	Kind Code[1]	Publication Date	Name of Patentee or Applicant of cited Document	Pages,Columns,Lines where Relevant Passages or Relevant Figures Appear
/A.R./	1	20010051917		2001-12-01	Bissonette et al.	
/A.R./	2	20020091614		2002-07-11	Yehia et al.	

INFORMATION DISCLOSURE STATEMENT BY APPLICANT (Not for submission under 37 CFR 1.99)		
	Application Number	09810514
	Filing Date	2001-03-15
	First Named Inventor	David Chao
	Art Unit	3687
	Examiner Name	Andrew J. Rudy
	Attorney Docket Number	T00071

/A.R./	3	20030018481		2003-01-23	Zhou	

If you wish to add additional U.S. Published Application citation information please click the Add button.

FOREIGN PATENT DOCUMENTS

Examiner Initial*	Cite No	Foreign Document Number[3]	Country Code[2] i	Kind Code[4]	Publication Date	Name of Patentee or Applicant of cited Document	Pages,Columns,Lines where Relevant Passages or Relevant Figures Appear	T[5]
	1							☐

If you wish to add additional Foreign Patent Document citation information please click the Add button

NON-PATENT LITERATURE DOCUMENTS

Examiner Initials*	Cite No	Include name of the author (in CAPITAL LETTERS), title of the article (when appropriate), title of the item (book, magazine, journal, serial, symposium, catalog, etc), date, pages(s), volume-issue number(s), publisher, city and/or country where published.	T[5]
/A.R./	1	Documents for U.S. Patent Application No. 09/810,515 in the U.S.P.T.O.'s Patent Application Information Retrieval (PAIR) system, as of October 13, 2010.	☐
/A.R./	2	Documents for U.S. Patent Application No. 09/896,144 in the U.S.P.T.O.'s Patent Application Information Retrieval (PAIR) system, as of October 13, 2010.	☐
/A.R./	3	Documents for U.S. Patent Application No. 09/809,991 in the U.S.P.T.O.'s Patent Application Information Retrieval (PAIR) system, as of October 13, 2010.	☐
/A.R./	4	Documents for U.S. Patent Application No. 09/810,012 in the U.S.P.T.O.'s Patent Application Information Retrieval (PAIR) system, as of October 13, 2010.	☐
/A.R./	5	U.S. Provisional Patent Application No. 60/223,076, filed on August 4, 2000 in the U.S. Patent & Trademark Office by Wheeler et al.	☐

If you wish to add additional non-patent literature document citation information please click the Add button

INFORMATION DISCLOSURE STATEMENT BY APPLICANT (**Not for submission under 37 CFR 1.99)**		
	Application Number	09810514
	Filing Date	2001-03-15
	First Named Inventor	David Chao
	Art Unit	3687
	Examiner Name	Andrew J. Rudy
	Attorney Docket Number	T00071

EXAMINER SIGNATURE			
Examiner Signature	/Andrew Joseph Rudy/	Date Considered	10/27/2010

*EXAMINER: Initial if reference considered, whether or not citation is in conformance with MPEP 609. Draw line through a citation if not in conformance and not considered. Include copy of this form with next communication to applicant.

[1] See Kind Codes of USPTO Patent Documents at www.USPTO.GOV or MPEP 901.04. [2] Enter office that issued the document, by the two-letter code (WIPO Standard ST.3). [3] For Japanese patent documents, the indication of the year of the reign of the Emperor must precede the serial number of the patent document. [4] Kind of document by the appropriate symbols as indicated on the document under WIPO Standard ST.16 if possible. [5] Applicant is to place a check mark here if English language translation is attached.

Issue Classification	Application/Control No.	Applicant(s)/Patent under Reexamination	
	09/810,514	CHAO ET AL.	
	Examiner	Art Unit	
	Andrew Joseph Rudy	3687	

ISSUE CLASSIFICATION

ORIGINAL					CROSS REFERENCE(S)						
CLASS				SUBCLASS	CLASS	SUBCLASS (ONE SUBCLASS PER BLOCK)					
707				945	235	376					
INTERNATIONAL CLASSIFICATION					705	7					
G	0	6	F	17/30							
				/							
				/							
				/							
				/							

XXXXXXXXXXXXXXXXXXXXXXXXXXX (Assistant Examiner) (Date)	/Andrew Joseph Rudy/ 10/27/2010 (Primary Examiner) (Date)	Total Claims Allowed: 46	
(Legal Instruments Examiner) (Date)		O.G. Print Claim(s): 1	O.G. Print Fig.: 1

☐ Claims renumbered in the same order as presented by applicant ☐ CPA ☐ T.D. ☐ R.1.47

Final	Original	Final	Original	Final	Original	Final	Original	Final	Original	Final	Original	Final	Original
1	1	31	31		61		91		121		151		181
2	2	32	32		62		92		122		152		182
3	3	33	33		63		93		123		153		183
4	4	34	34		64		94		124		154		184
5	5	35	35	43	65		95		125		155		185
6	6	36	36	44	66		96		126		156		186
7	7	37	37	45	67		97		127		157		187
8	8	38	38	46	68		98		128		158		188
9	9	39	39		69		99		129		159		189
10	10	40	40		70		100		130		160		190
11	11	41	41		71		101		131		161		191
12	12	42	42		72		102		132		162		192
13	13		43		73		103		133		163		193
14	14		44		74		104		134		164		194
15	15		45		75		105		135		165		195
16	16		46		76		106		136		166		196
17	17		47		77		107		137		167		197
18	18		48		78		108		138		168		198
19	19		49		79		109		139		169		199
20	20		50		80		110		140		170		200
21	21		51		81		111		141		171		201
22	22		52		82		112		142		172		202
23	23		53		83		113		143		173		203
24	24		54		84		114		144		174		204
25	25		55		85		115		145		175		205
26	26		56		86		116		146		176		206
27	27		57		87		117		147		177		207
28	28		58		88		118		148		178		208
29	29		59		89		119		149		179		209
30	30		60		90		120		150		180		210

Search Notes

Application/Control No.	Applicant(s)/Patent under Reexamination	
09/810,514	CHAO ET AL.	
Examiner	**Art Unit**	
Andrew Joseph Rudy	3687	

SEARCHED			
Class	Subclass	Date	Examiner
235	375,376	10/26/2010	AJR
705	7,10,26	10/26/2010	AJR
707	923,930	10/26/2010	AJR
707	944,945	10/26/2010	AJR
707	950	10/26/2010	AJR
707	999.001	10/26/2010	AJR
707	999.009	10/26/2010	AJR
707	999.930	10/26/2010	AJR
707	999.945	10/26/2010	AJR
711	1	10/26/2010	AJR

INTERFERENCE SEARCHED			
Class	Subclass	Date	Examiner
707	**945**	**10/26/2010**	**AJR**
705	7,10,26	10/26/2010	AJR
235	375,376	10/26/2010	AJR

SEARCH NOTES (INCLUDING SEARCH STRATEGY)		
	DATE	EXMR
Continuity data reviewed.	10/26/2010	AJR
Inventor name search conducted	10/26/2010	AJR
Bibliographic data reviewed.	10/26/2010	AJR

PART B - FEE(S) TRANSMITTAL

Complete and send this form, together with applicable fee(s), to: Mail **Mail Stop ISSUE FEE**
Commissioner for Patents
P.O. Box 1450
Alexandria, Virginia 22313-1450
or Fax (571)-273-2885

INSTRUCTIONS: This form should be used for transmitting the ISSUE FEE and PUBLICATION FEE (if required). Blocks 1 through 5 should be completed where appropriate. All further correspondence including the Patent, advance orders and notification of maintenance fees will be mailed to the current correspondence address as indicated unless corrected below or directed otherwise in Block 1, by (a) specifying a new correspondence address; and/or (b) indicating a separate "FEE ADDRESS" for maintenance fee notifications.

CURRENT CORRESPONDENCE ADDRESS (Note: Use Block 1 for any change of address)

33438 7590 11/03/2010

HAMILTON & TERRILE, LLP
P.O. BOX 203518
AUSTIN, TX 78720

Note: A certificate of mailing can only be used for domestic mailings of the Fee(s) Transmittal. This certificate cannot be used for any other accompanying papers. Each additional paper, such as an assignment or formal drawing, must have its own certificate of mailing or transmission.

Filed Via EFS

Certificate of Mailing or Transmission

I hereby certify that this Fee(s) Transmittal is being deposited with the United States Postal Service with sufficient postage for first class mail in an envelope addressed to the Mail Stop ISSUE FEE address above, or being facsimile transmitted to the USPTO (571) 273-2885, on the date indicated below.

(Depositor's name)
(Signature)
(Date)

APPLICATION NO.	FILING DATE	FIRST NAMED INVENTOR	ATTORNEY DOCKET NO.	CONFIRMATION NO.
09/810,514	03/15/2001	David Chao	T00071	6193

TITLE OF INVENTION: METHOD AND SYSTEM FOR MANAGING DISTRIBUTOR INFORMATION

APPLN. TYPE	SMALL ENTITY	ISSUE FEE DUE	PUBLICATION FEE DUE	PREV. PAID ISSUE FEE	TOTAL FEE(S) DUE	DATE DUE
nonprovisional	NO	$1510	$300	$0	$1810	02/03/2011

EXAMINER	ART UNIT	CLASS-SUBCLASS
RUDY, ANDREW J	3687	707-945000

1. Change of correspondence address or indication of "Fee Address" (37 CFR 1.363).

☐ Change of correspondence address (or Change of Correspondence Address form PTO/SB/122) attached.

☐ "Fee Address" indication (or "Fee Address" Indication form PTO/SB/47; Rev 03-02 or more recent) attached. **Use of a Customer Number is required.**

2. For printing on the patent front page, list

(1) the names of up to 3 registered patent attorneys or agents OR, alternatively,

(2) the name of a single firm (having as a member a registered attorney or agent) and the names of up to 2 registered patent attorneys or agents. If no name is listed, no name will be printed.

1 Hamilton & Terrile, LLP
2 Kent B. Chambers
3

3. ASSIGNEE NAME AND RESIDENCE DATA TO BE PRINTED ON THE PATENT (print or type)

PLEASE NOTE: Unless an assignee is identified below, no assignee data will appear on the patent. If an assignee is identified below, the document has been filed for recordation as set forth in 37 CFR 3.11. Completion of this form is NOT a substitute for filing an assignment.

(A) NAME OF ASSIGNEE: Versata Development Group, Inc.

(B) RESIDENCE: (CITY and STATE OR COUNTRY): Austin, Texas

Please check the appropriate assignee category or categories (will not be printed on the patent) : ☐ Individual ☒ Corporation or other private group entity ☐ Government

4a. The following fee(s) are submitted:

☒ Issue Fee

☒ Publication Fee (No small entity discount permitted)

☐ Advance Order - # of Copies _____

4b. Payment of Fee(s): **(Please first reapply any previously paid issue fee shown above)**

☐ A check is enclosed.

☒ Payment by credit card. ~~Form PTO-2038 is attached~~.

☒ The Director is hereby authorized to charge the required fee(s), any deficiency, or credit any overpayment, to Deposit Account Number 502264 (enclose an extra copy of this form).

5. **Change in Entity Status** (from status indicated above)

☐ a. Applicant claims SMALL ENTITY status. See 37 CFR 1.27.

☐ b. Applicant is no longer claiming SMALL ENTITY status. See 37 CFR 1.27(g)(2).

NOTE: The Issue Fee and Publication Fee (if required) will not be accepted from anyone other than the applicant; a registered attorney or agent; or the assignee or other party in interest as shown by the records of the United States Patent and Trademark Office.

Authorized Signature /Kent B. Chambers/ Date February 1, 2011

Typed or printed name Kent B. Chambers Registration No. 38,839

This collection of information is required by 37 CFR 1.311. The information is required to obtain or retain a benefit by the public which is to file (and by the USPTO to process) an application. Confidentiality is governed by 35 U.S.C. 122 and 37 CFR 1.14. This collection is estimated to take 12 minutes to complete, including gathering, preparing, and submitting the completed application form to the USPTO. Time will vary depending upon the individual case. Any comments on the amount of time you require to complete this form and/or suggestions for reducing this burden, should be sent to the Chief Information Officer, U.S. Patent and Trademark Office, U.S. Department of Commerce, P.O. Box 1450, Alexandria, Virginia 22313-1450. DO NOT SEND FEES OR COMPLETED FORMS TO THIS ADDRESS. SEND TO: Commissioner for Patents, P.O. Box 1450, Alexandria, Virginia 22313-1450.

Under the Paperwork Reduction Act of 1995, no persons are required to respond to a collection of information unless it displays a valid OMB control number.

Electronic Patent Application Fee Transmittal

Application Number:	09810514
Filing Date:	15-Mar-2001
Title of Invention:	METHOD AND SYSTEM FOR MANAGING DISTRIBUTOR INFORMATION
First Named Inventor/Applicant Name:	David Chao
Filer:	Kent Bryan Chambers/Nishi Pasarya
Attorney Docket Number:	T00071

Filed as Large Entity

Utility under 35 USC 111(a) Filing Fees

Description	Fee Code	Quantity	Amount	Sub-Total in USD($)
Basic Filing:				
Pages:				
Claims:				
Miscellaneous-Filing:				
Petition:				
Patent-Appeals-and-Interference:				
Post-Allowance-and-Post-Issuance:				
Utility Appl issue fee	1501	1	1510	1510
Publ. Fee- early, voluntary, or normal	1504	1	300	300

Description	Fee Code	Quantity	Amount	Sub-Total in USD($)
Extension-of-Time:				
Miscellaneous:				
			Total in USD ($)	**1810**

Electronic Acknowledgement Receipt

EFS ID:	9357458
Application Number:	09810514
International Application Number:	
Confirmation Number:	6193
Title of Invention:	METHOD AND SYSTEM FOR MANAGING DISTRIBUTOR INFORMATION
First Named Inventor/Applicant Name:	David Chao
Customer Number:	33438
Filer:	Kent Bryan Chambers/Nishi Pasarya
Filer Authorized By:	Kent Bryan Chambers
Attorney Docket Number:	T00071
Receipt Date:	01-FEB-2011
Filing Date:	15-MAR-2001
Time Stamp:	19:24:36
Application Type:	Utility under 35 USC 111(a)

Payment information:

Submitted with Payment	yes
Payment Type	Credit Card
Payment was successfully received in RAM	$1810
RAM confirmation Number	7296
Deposit Account	502264
Authorized User	CHAMBERS,KENT B

The Director of the USPTO is hereby authorized to charge indicated fees and credit any overpayment as follows:

Charge any Additional Fees required under 37 C.F.R. Section 1.21 (Miscellaneous fees and charges)

File Listing:

Document Number	Document Description	File Name	File Size(Bytes)/ Message Digest	Multi Part /.zip	Pages (if appl.)
1	Issue Fee Payment (PTO-85B)	T00071_IF-XMTL.pdf	112834 6fde6c0397d0ca63412810a5363d03acd26d729d	no	1
Warnings:					
Information:					
2	Fee Worksheet (PTO-875)	fee-info.pdf	31963 51a850a7385bcd4ba197073b46a20dfa57f087c2	no	2
Warnings:					
Information:					
		Total Files Size (in bytes):	144797		

This Acknowledgement Receipt evidences receipt on the noted date by the USPTO of the indicated documents, characterized by the applicant, and including page counts, where applicable. It serves as evidence of receipt similar to a Post Card, as described in MPEP 503.

New Applications Under 35 U.S.C. 111

If a new application is being filed and the application includes the necessary components for a filing date (see 37 CFR 1.53(b)-(d) and MPEP 506), a Filing Receipt (37 CFR 1.54) will be issued in due course and the date shown on this Acknowledgement Receipt will establish the filing date of the application.

National Stage of an International Application under 35 U.S.C. 371

If a timely submission to enter the national stage of an international application is compliant with the conditions of 35 U.S.C. 371 and other applicable requirements a Form PCT/DO/EO/903 indicating acceptance of the application as a national stage submission under 35 U.S.C. 371 will be issued in addition to the Filing Receipt, in due course.

New International Application Filed with the USPTO as a Receiving Office

If a new international application is being filed and the international application includes the necessary components for an international filing date (see PCT Article 11 and MPEP 1810), a Notification of the International Application Number and of the International Filing Date (Form PCT/RO/105) will be issued in due course, subject to prescriptions concerning national security, and the date shown on this Acknowledgement Receipt will establish the international filing date of the application.

UNITED STATES PATENT AND TRADEMARK OFFICE

UNITED STATES DEPARTMENT OF COMMERCE
United States Patent and Trademark Office
Address: COMMISSIONER FOR PATENTS
P.O. Box 1450
Alexandria, Virginia 22313-1450
www.uspto.gov

APPLICATION NO.	ISSUE DATE	PATENT NO.	ATTORNEY DOCKET NO.	CONFIRMATION NO.
09/810,514	03/15/2011	7908304	T00071	6193

33438 7590 02/23/2011

HAMILTON & TERRILE, LLP
P.O. BOX 203518
AUSTIN, TX 78720

ISSUE NOTIFICATION

The projected patent number and issue date are specified above.

Determination of Patent Term Adjustment under 35 U.S.C. 154 (b)
(application filed on or after May 29, 2000)

The Patent Term Adjustment is 1198 day(s). Any patent to issue from the above-identified application will include an indication of the adjustment on the front page.

If a Continued Prosecution Application (CPA) was filed in the above-identified application, the filing date that determines Patent Term Adjustment is the filing date of the most recent CPA.

Applicant will be able to obtain more detailed information by accessing the Patent Application Information Retrieval (PAIR) WEB site (http://pair.uspto.gov).

Any questions regarding the Patent Term Extension or Adjustment determination should be directed to the Office of Patent Legal Administration at (571)-272-7702. Questions relating to issue and publication fee payments should be directed to the Application Assistance Unit (AAU) of the Office of Data Management (ODM) at (571)-272-4200.

APPLICANT(s) (Please see PAIR WEB site http://pair.uspto.gov for additional applicants):

David Chao, Austin, TX;
Brian Blount, Austin, TX;
Charles Erickson, Cedar Park, TX;
Shari Gharavy, Austin, TX;
Cheng Zhou, Austin, TX;
Joshua Toub, Austin, TX;