EXHIBIT L

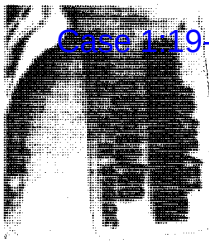

Class	Subclass
600	300

ISSUE CLASSIFICATION

JC870

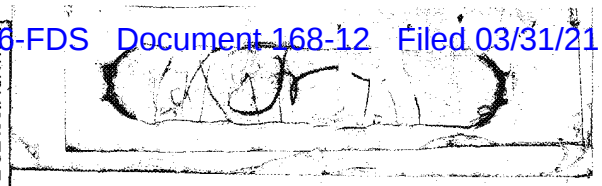

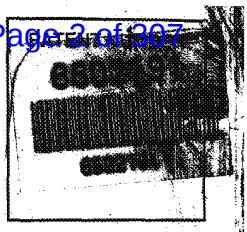

U.S. UTILITY Patent Application

O.I.P.E.	PATENT DATE
JR SCANNED Q.A.	[redacted]

APPLICATION NO.	CONT/PRIOR	CLASS	SUBCLASS	ART UNIT	EXAMINER
09/738270	D	~~507~~ 600	300	~~3702~~ 3747	~~[illegible]~~ Wolfe

APPLICANTS: Roger Quy

TITLE: Method and apparatus for health and disease management combining patient data monitoring with wireless internet connectivity

Certificate PTO-2040 12/99

JAN 30 2007

of Correction

ISSUING CLASSIFICATION

ORIGINAL		CROSS REFERENCE(S)						
CLASS	SUBCLASS	CLASS	SUBCLASS (ONE SUBCLASS PER BLOCK)					
600	300	128	903	904	923			
INTERNATIONAL CLASSIFICATION								
A61B	5/00							

☐ Continued on Issue Slip Inside File Jacket

☐ TERMINAL DISCLAIMER	DRAWINGS			CLAIMS ALLOWED	
	Sheets Drwg.	Figs. Drwg.	Print Fig.	Total Claims	Print Claim for O.G.
	8	8	1	105	44

☐ The term of this patent subsequent to _____ (date) has been disclaimed.

(Assistant Examiner) (Date)

NOTICE OF ALLOWANCE MAILED: 12-13-02

☐ The term of this patent shall not extend beyond the expiration date of U.S Patent. No. _____

Willie R. Wolfe
Willie R. Wolfe
Primary Examiner
Art Unit 3747 (Primary Examiner) 12/13/02 (Date)

ISSUE FEE

Amount Due	Date Paid
$640	3-18-03

☐ The terminal ____ months of this patent have been disclaimed.

(Legal Instruments Examiner) 12/16/02 (Date)

ISSUE BATCH NUMBER

WARNING:
The information disclosed herein may be restricted. Unauthorized disclosure may be prohibited by the United States Code Title 35, Sections 122, 181 and 368. Possession outside the U.S. Patent & Trademark Office is restricted to authorized employees and contractors only.

Form PTO-436A (Rev. 6/99)

FILED WITH: ☐ DISK (CRF) ☐ FICHE ☐ CD-ROM
(Attached in pocket on right inside flap)

Drawing

ISSUE FEE IN FILE

(FACE)

UNITED STATES PATENT AND TRADEMARK OFFICE

COMMISSIONER FOR PATENTS
UNITED STATES PATENT AND TRADEMARK OFFICE
WASHINGTON, D.C. 20231
www.uspto.gov

Bib Data Sheet

CONFIRMATION NO. 1635

SERIAL NUMBER	FILING DATE	CLASS	GROUP ART UNIT	ATTORNEY DOCKET NO.
09/738,270	12/15/2000 RULE	607	3762	00125/002001

APPLICANTS
Roger J. Quy, Mill Valley, CA;

** CONTINUING DATA **********
THIS APPLN CLAIMS BENEFIT OF 60/172,486 12/17/1999

** FOREIGN APPLICATIONS **********

IF REQUIRED, FOREIGN FILING LICENSE GRANTED ** SMALL ENTITY **
** 05/29/2001

Foreign Priority claimed	STATE OR COUNTRY	SHEETS DRAWING	TOTAL CLAIMS	INDEPENDENT CLAIMS
☐ yes ☒ no 35 USC 119 (a-d) conditions met ☐ yes ☒ no ☐ Met after Allowance Verified and Acknowledged Examiner's Signature Initials	CA	8	105	11

ADDRESS
Mark D. Wieczorek
5038 Saratoga Avenue
San Diego ,CA 92107

TITLE
Method and apparatus for health and disease management combining patient data monitoring with wireless internet connectivity

FILING FEE RECEIVED	FEES: Authority has been given in Paper	
1505	No. _____ to charge/credit DEPOSIT ACCOUNT No. _____ for following:	☐ All Fees ☐ 1.16 Fees (Filing) ☐ 1.17 Fees (Processing Ext. of time) ☐ 1.18 Fees (Issue) ☐ Other _____ ☐ Credit

PATENT APPLICATION
09738270

09738270
INITIALS
FEB 09 01 26

CONTENTS

		Date Received (Incl. C. of M.) or Date Mailed			Date Received (Incl. C. of M.) or Date Mailed
1.	Application ____ papers.		42.		
2.	~~IDS~~	~~02-01-01~~	43.		
3.	Ltr re Dec, Fees	05-30-01	44.		
4.	declaration + fees	6-8-01	45.		
5.	IDS	6-8-01	46.		
6.	~~IDS~~ VOID	~~6/8/01~~	47.		
7.	Change of Add	3-13-02	48.		
8.	Exr's Amdt. / AF	12-13-02	49.		
9.	IDS	1-30-01	50.		
10.	IDS	2-27-03	51.		
11.	6/17/03 Formal Drawings (8 shts) set	3/18/03	52.		
12.	COE	11/14/06	53.		
13.			54.		
14.			55.		
15.			56.		
16.			57.		
17.			58.		
18.			59.		
19.			60.		
20.			61.		
21.			62.		
22.			63.		
23.			64.		
24.			65.		
25.			66.		
26.			67.		
27.			68.		
28.			69.		
29.			70.		
30.			71.		
31.			72.		
32.			73.		
33.			74.		
34.			75.		
35.			76.		
36.			77.		
37.			78.		
38.			79.		
39.			80.		
40.			81.		
41.			82.		

US006602191B2

(12) **United States Patent**
Quy

(10) **Patent No.: US 6,602,191 B2**
(45) **Date of Patent: Aug. 5, 2003**

(54) **METHOD AND APPARATUS FOR HEALTH AND DISEASE MANAGEMENT COMBINING PATIENT DATA MONITORING WITH WIRELESS INTERNET CONNECTIVITY**

(75) Inventor: **Roger J. Quy**, Mill Valley, CA (US)

(73) Assignee: **Q-tec Systems LLP**, Wilmington, DE (US)

(*) Notice: Subject to any disclaimer, the term of this patent is extended or adjusted under 35 U.S.C. 154(b) by 199 days.

(21) Appl. No.: **09/738,270**

(22) Filed: **Dec. 15, 2000**

(65) **Prior Publication Data**

US 2001/0047125 A1 Nov. 29, 2001

Related U.S. Application Data

(60) Provisional application No. 60/172,486, filed on Dec. 17, 1999.

(51) **Int. Cl.**[7] **A61B 5/00**

(52) **U.S. Cl.** **600/300**; 128/903; 128/904; 128/923

(58) **Field of Search** 600/300, 301, 600/345, 365, 481, 483, 485, 509, 529; 607/27, 30, 31, 32, 60; 128/902, 903, 904, 905, 920, 923, 924; 709/204, 205, 230, 238, 245, 246; 705/2, 3; 707/6

(56) **References Cited**

U.S. PATENT DOCUMENTS

4,282,883	A		8/1981	Yerushalmy
5,307,263	A		4/1994	Brown
5,357,427	A	*	10/1994	Langen et al. 600/300
5,544,661	A		8/1996	Davis et al.
5,549,117	A		8/1996	Tacklind et al.
5,601,435	A	*	2/1997	Quy ..... 434/307 R
5,626,144	A		5/1997	Tacklind et al.

(List continued on next page.)

FOREIGN PATENT DOCUMENTS

WO	WO 95/32480	11/1995
WO	WO 97/28736	8/1997
WO	OW 97/28737	8/1997
WO	WO 98/24358	6/1998
WO	WO 98/38909	9/1998
WO	WO 99/04687	2/1999
WO	WO 99/14882	3/1999
WO	WO 99/41682	8/1999
WO	WO 99/44494	9/1999
WO	WO 99/46718	9/1999
WO	WO 00/36900	6/2000
WO	WO 00/40145	7/2000
WO	WO 00/54205	9/2000
WO	WO 00/54206	9/2000
WO	WO 00/62662	10/2000

OTHER PUBLICATIONS

EFI Framework Draft Version 0.8 (Jun. 3, 2000); External Functionality Interface Framework; pp. 1–35, Jun. 3, 2000. Internet press release: New York Business Wire (Sep. 25, 2000); MedSearch Technologies, Inc. Develops a Revolutionary Home–Care Wireless Technology Utilizing PDAs Personal Organizers–as Patient Monitors.

(List continued on next page.)

Primary Examiner—Willis R. Wolfe
(74) *Attorney, Agent, or Firm*—Mark D. Wieczorek

(57) **ABSTRACT**

A method and apparatus for a wireless health monitoring system for interactively monitoring a disease or health condition of a patient by connecting an internet-enabled wireless web device ("WWD") to a health monitoring device which may be a medical device or other health related device. The WWD may be connected to the health monitoring device directly by a wired connection to a generic input/output port of the WWD or wirelessly connected to the health monitoring device, such as via an infrared or radio frequency connection. The health related data is transmitted from the WWD to a server using standard internet protocols. The server calculates a response using a software program while providing for review bt a physician or health specialist. The user may interact with the server, for example, the server transmits a response to the WWD and the user may answer the response or provide other information.

105 Claims, 8 Drawing Sheets

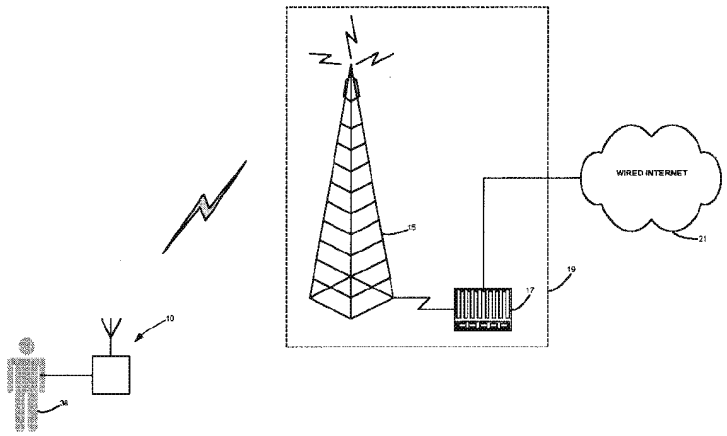

U.S. PATENT DOCUMENTS

5,678,562	A		10/1997	Sellers	
5,704,366	A		1/1998	Tacklind et al.	
5,724,025	A		3/1998	Tavori	
5,732,709	A		3/1998	Tacklind et al.	
5,735,285	A		4/1998	Albert et al.	
5,752,917	A		5/1998	Fuchs	
5,772,586	A	*	6/1998	Heinonen et al.	600/300
5,791,342	A		8/1998	Woodard	
5,933,136	A		8/1999	Brown	
5,935,060	A		8/1999	Iliff	
5,951,300	A		9/1999	Brown	
5,964,701	A		10/1999	Asada et al.	
5,987,519	A		11/1999	Peifer et al.	
5,997,476	A		12/1999	Brown	
6,022,315	A		2/2000	Iliff	
6,055,506	A		4/2000	Frasca, Jr.	
6,057,758	A		5/2000	Dempsey et al.	
6,059,692	A		5/2000	Hickman	
6,083,156	A		7/2000	Lisiecki	
6,101,478	A		8/2000	Brown	
6,144,837	A	*	11/2000	Quy	434/307 R
6,168,563	B1		1/2001	Brown	
6,319,199	B1	*	11/2001	Sheehan et al.	600/300
6,336,900	B1	*	1/2002	Alleckson et al.	600/300
6,416,471	B1	*	7/2002	Kumar et al.	600/300
6,440,068	B1	*	8/2002	Brown et al.	600/300
6,450,955	B1	*	9/2002	Brown et al.	600/300
6,458,080	B1	*	10/2002	Brown et al.	600/300
2002/0019584	A1	*	2/2002	Schulze et al.	600/300

OTHER PUBLICATIONS

Jyrki Oraskari; "Bluetooth versus WLAN IEEE 802.1x"; Helsinki University of Technology (Department of Computer Science and Engineering) Nov., 2000.

Jack Smith; "Your Personal Health Buddy"; ABCNews.com; http://abcnews.go.com/sections/tech/Cuttingedge/cuttingedge990225.html; 3 pages; Nov. 24, 2000.

"The Health Hero Communications Platform"; The Health Hero Network Online Services; http://www.hhn.com/products/index.html: 2 pages; Nov. 24, 2000.

"Painless Blood–Glucose Monitoring"; Kumetrix Technology Overview; http://www.kumetrix.com/technology.html: 2 pages; Nov. 24, 2000.

"Technology & Clinical Results–Simple Solutions Through Technology–Progression of Glucose Monitoring Technology"; Amira; http://www.amira.com/tech/tc tech.htm; 2 pages; Nov. 24, 2000.

"Wired for Wellness"; LifeChart.com; http://www.lifechart.com; 2 pages; Nov. 24, 2000.

"About Data Critical Corporation"; Yahoo—Data Critical to provide Mallinckrodt with Wireless Connectivity for Ventilators: http://biz.yahoo.com/prnews/001012/mo.mallinc.html; 1 page; Nov. 24, 2000.

"Bluetooth wireless technology–bridging the gap between computing and communication"; Bluetooth Technology; http://www.intell.com/mobile/bluetooth/: 2 pages; Nov. 28, 2000.

"Bluetooth resource center"; "What is Bluetooth?"; palowireless.com: http://www.palowireless.com/infotooth/whatis.asp; 3 pages; Nov.28, 2000.

"Bluetooth Tutorial"; palowireless.com—bluetooth resource center; http://www.palowireless.com/infotooth/tutorial.aso; 4 pages; Nov. 28, 2000.

"Bluetooth Profiles"; palowireless.com—bluetooth resource center; http://www.palowireless.com/infotooth/tutorial/profiles.asp; 4 pages; Nov. 28, 2000.

Nick Hunt; "Bluetooth Vesus 802.11"; TDK Systems; http://www.cellular.co.za/bluetooth versus 802.htm; 4 pages; Nov. 28, 2000.

"Bluetooth vs. Airport (802.11 Network)"; palowireless.com—bluetooth resource center; http://www.palowireless.com/infotooth/knowbase/othernetworks/15.asp; 3 pages; Nov. 28, 2000.

"Personal Digital Assistants—A2 Anytime/Anywhere—A Weekly on Wireless Infrastructure and Data Services"; Thomas Weisel Partners (Merchant Banking); 5 pages; Nov. 29, 2000.

Ashlee Vance; "Ericsson and Intel make Bluetooth pact"; InfoWorld.com; http://www2.infoworld.com/articles/hn/xml/00/12/04/001204hnericintel.xml?T . . . /printarticle.htm; 1 page; Dec. 4, 2000.

"Personal Portable Office";Nokia 9000il digital; http://www.nokiausa.com/9000il; 4 pages; Dec. 7, 2000.

Pui–Wing Tam, "Handspring Hopes"; Article from The Wall Street Journal; Section B (Nov. 2000).

Author Unknown; Articles on Phones and New Technologies; Article from The Wall Street Journal; (Nov. 2000).

David Pringle, "Sagem to Launch Hand–held Computer that Doubles as Top–End Mobile Phone"; Article from The Wall Street Journal; (Nov. 2000).

* cited by examiner

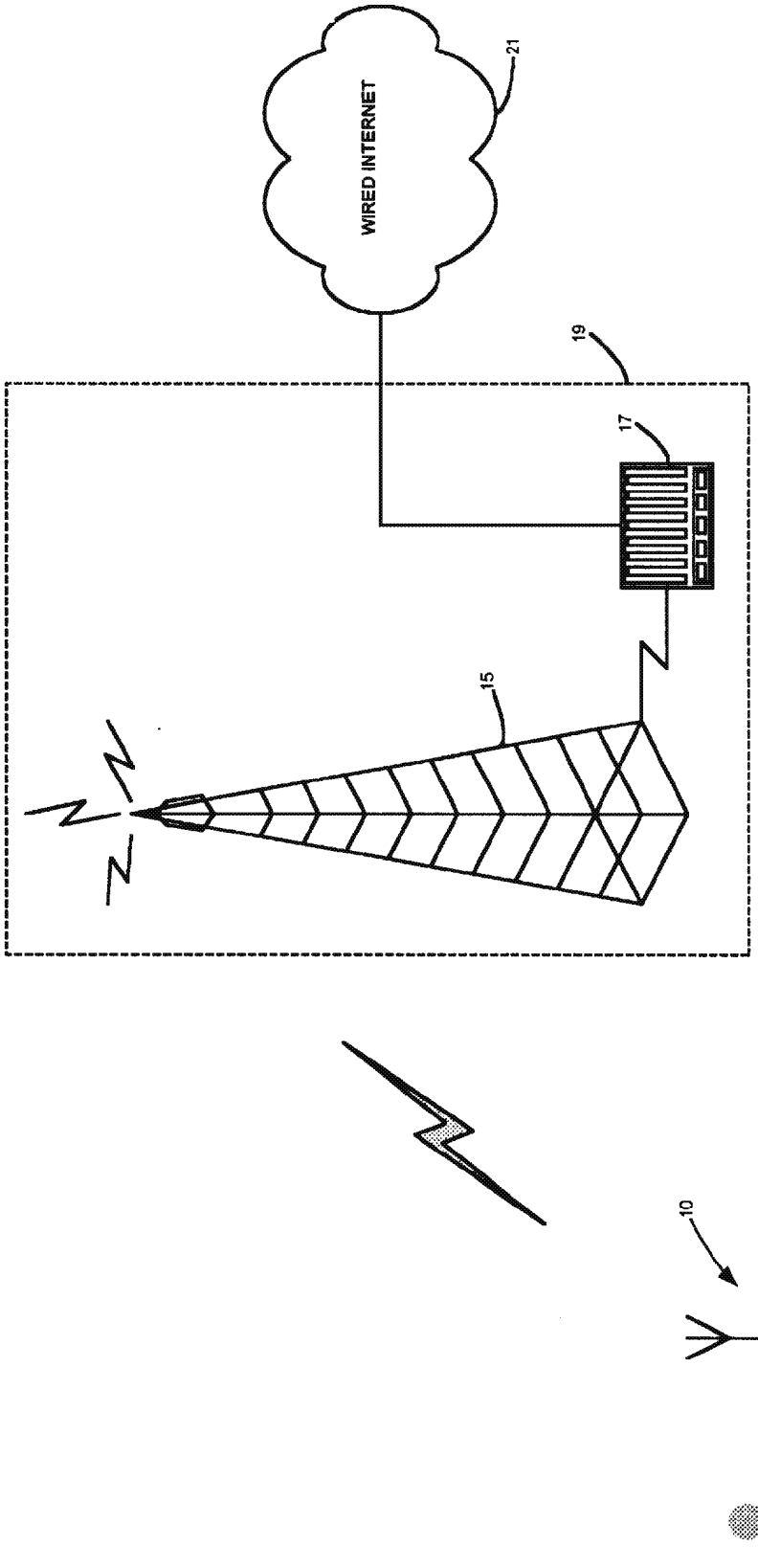

FIG. 1

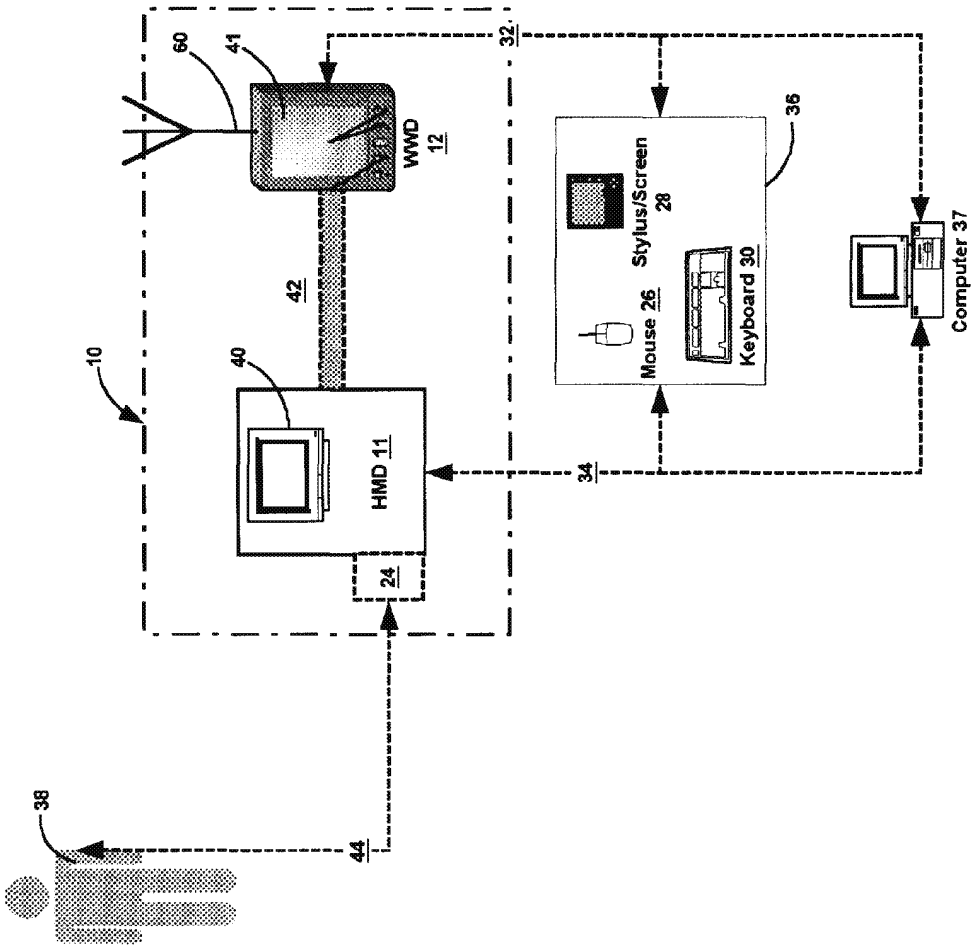
60
41
WWD 12
42
40
HMD 11
24
10
32
36
Stylus/Screen 28
Mouse 26
Keyboard 30
Computer 37
34
38
44

FIG. 2

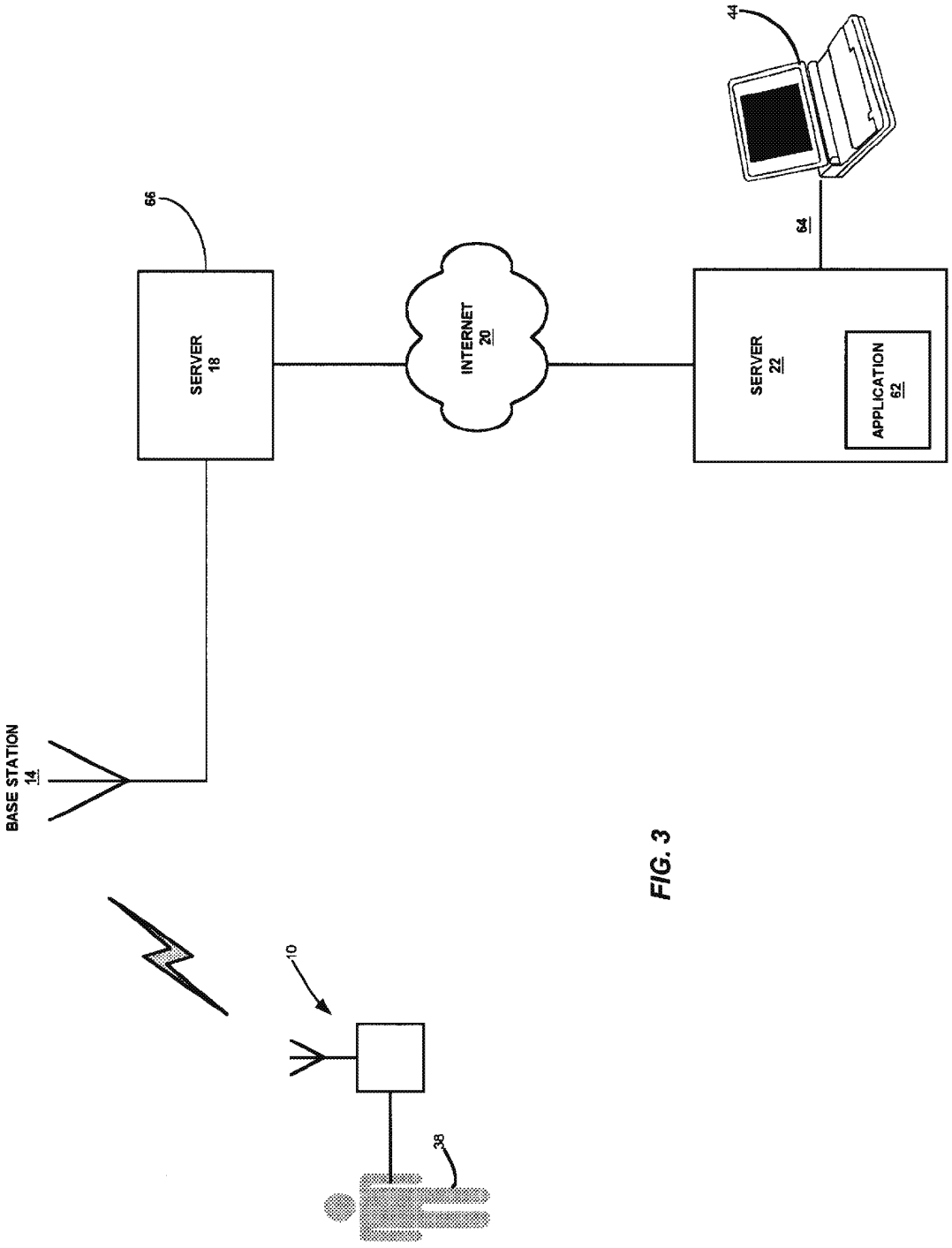
44
64
66
SERVER
18
INTERNET
20
SERVER
22
APPLICATION
62
BASE STATION
14
10
38

FIG. 3

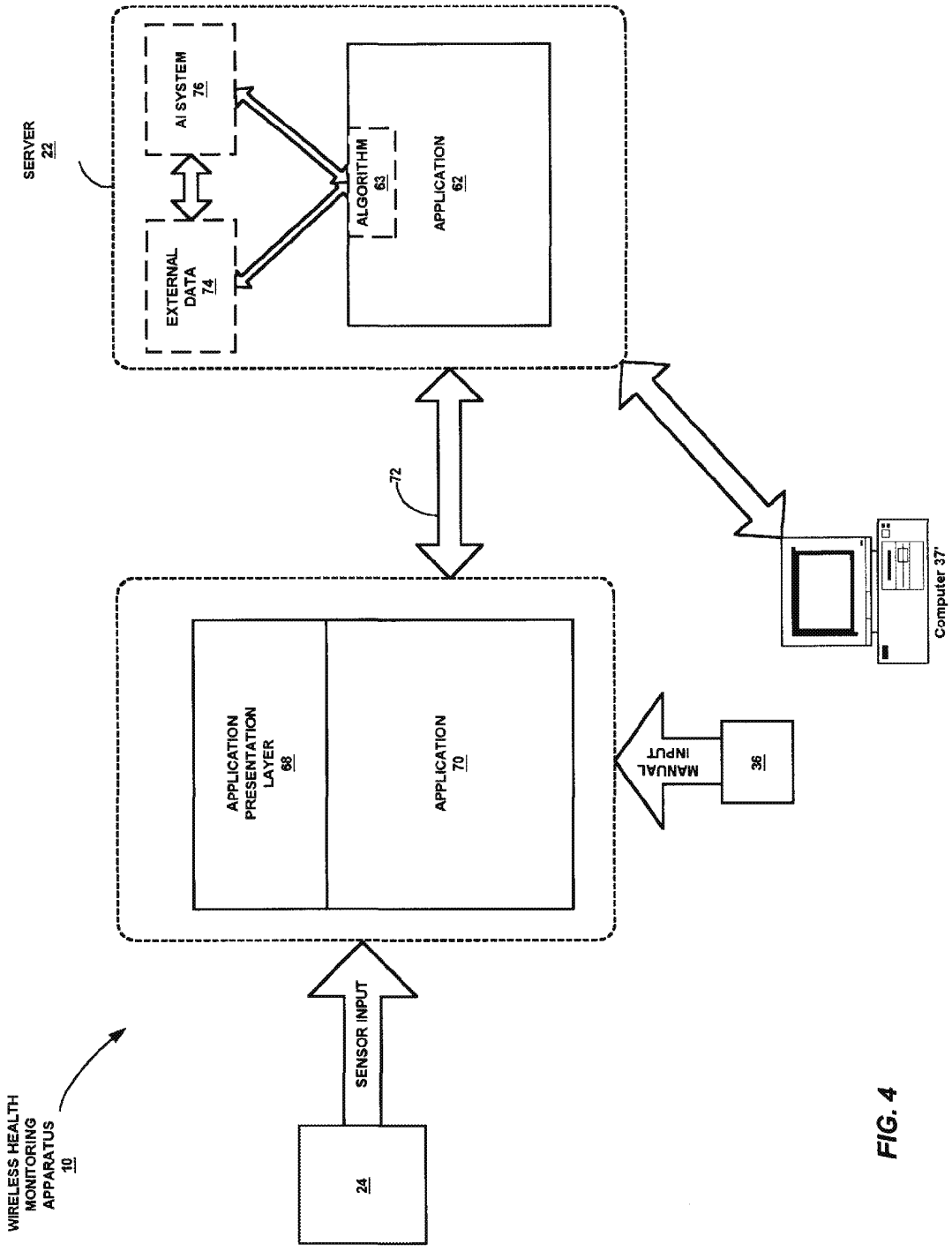
SERVER
22
AI SYSTEM
76
EXTERNAL
DATA
74
ALGORITHM
63
APPLICATION
62
72
Computer 37'
APPLICATION
PRESENTATION
LAYER
68
APPLICATION
70
MANUAL
INPUT
36
SENSOR INPUT
24
WIRELESS HEALTH
MONITORING
APPARATUS
10

FIG. 4

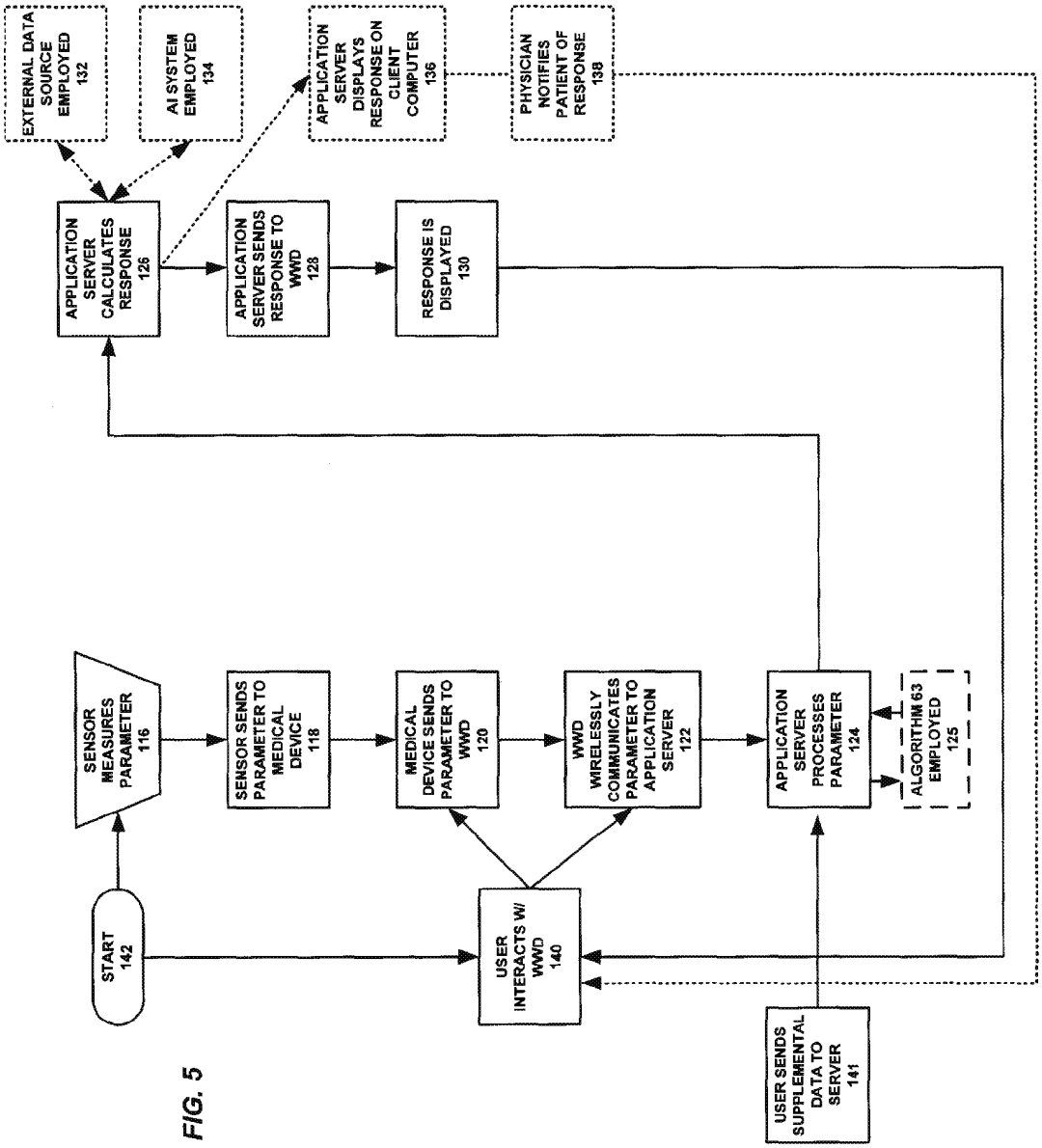
EXTERNAL DATA SOURCE EMPLOYED 132
AI SYSTEM EMPLOYED 134
APPLICATION SERVER DISPLAYS RESPONSE ON CLIENT COMPUTER 136
PHYSICIAN NOTIFIES PATIENT OF RESPONSE 138
APPLICATION SERVER CALCULATES RESPONSE 126
APPLICATION SERVER SENDS RESPONSE TO WWD 128
RESPONSE IS DISPLAYED 130
SENSOR MEASURES PARAMETER 116
SENSOR SENDS PARAMETER TO MEDICAL DEVICE 118
MEDICAL DEVICE SENDS PARAMETER TO WWD 120
WWD WIRELESSLY COMMUNICATES PARAMETER TO APPLICATION SERVER 122
APPLICATION SERVER PROCESSES PARAMETER 124
ALGORITHM 63 EMPLOYED 125
START 142
USER INTERACTS W/ WWD 140
USER SENDS SUPPLEMENTAL DATA TO SERVER 141

FIG. 5

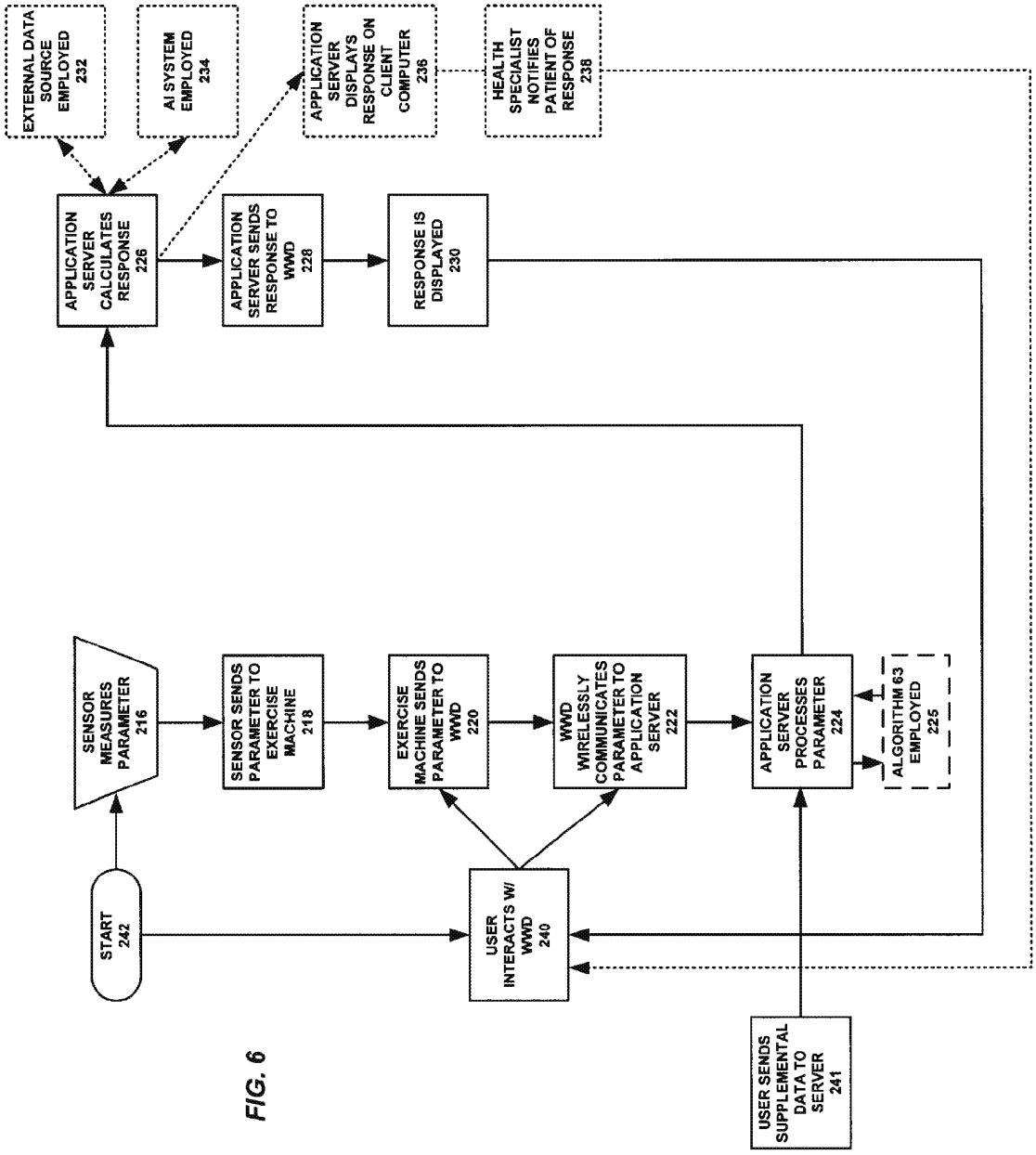
EXTERNAL DATA SOURCE EMPLOYED 232
AI SYSTEM EMPLOYED 234
APPLICATION SERVER DISPLAYS RESPONSE ON CLIENT COMPUTER 236
HEALTH SPECIALIST NOTIFIES PATIENT OF RESPONSE 238
APPLICATION SERVER CALCULATES RESPONSE 226
APPLICATION SERVER SENDS RESPONSE TO WWD 228
RESPONSE IS DISPLAYED 230
SENSOR MEASURES PARAMETER 216
SENSOR SENDS PARAMETER TO EXERCISE MACHINE 218
EXERCISE MACHINE SENDS PARAMETER TO WWD 220
WWD WIRELESSLY COMMUNICATES PARAMETER TO APPLICATION SERVER 222
APPLICATION SERVER PROCESSES PARAMETER 224
ALGORITHM 63 EMPLOYED 225
START 242
USER INTERACTS W/ WWD 240
USER SENDS SUPPLEMENTAL DATA TO SERVER 241

FIG. 6

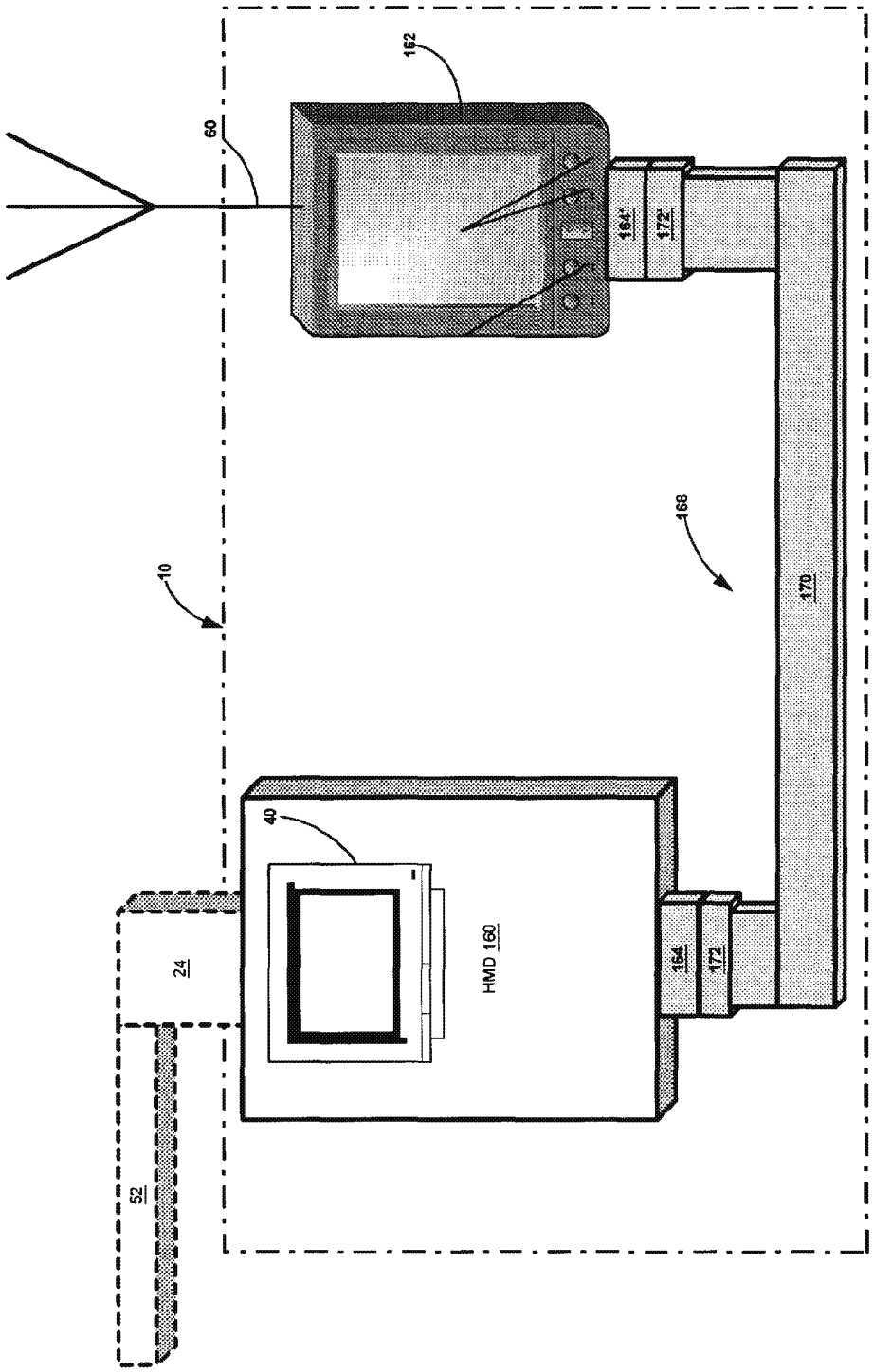

FIG. 7

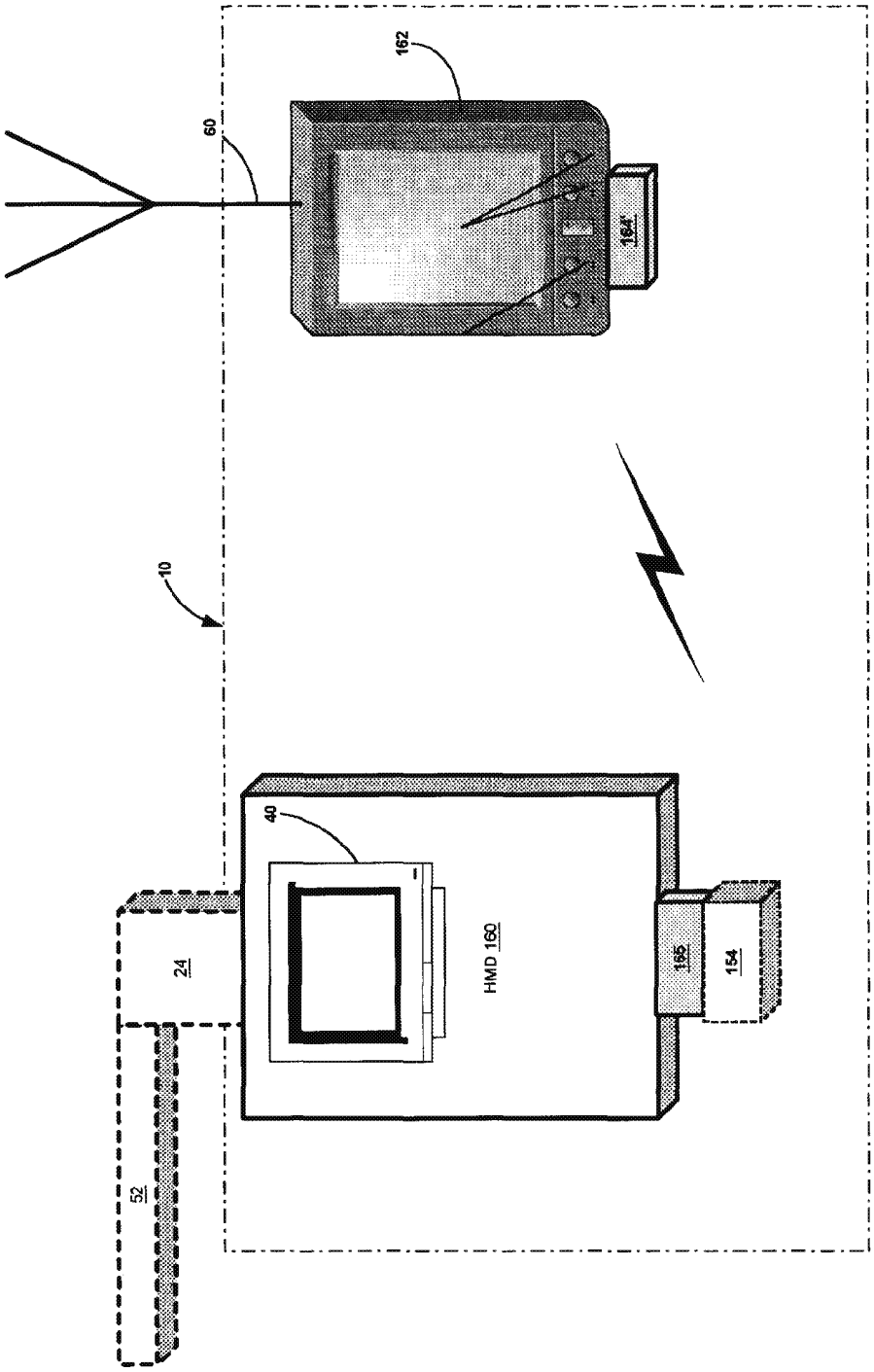

FIG. 8

METHOD AND APPARATUS FOR HEALTH AND DISEASE MANAGEMENT COMBINING PATIENT DATA MONITORING WITH WIRELESS INTERNET CONNECTIVITY

CROSS-REFERENCE TO RELATED APPLICATIONS

This application is a conversion of U.S. Provisional Patent Application Ser. No. 60/172,486 filed Dec. 17, 1999, entitled "Method and Apparatus for Health and Disease Management Combining Patient Data Monitoring with Wireless Internet Connectivity".

REFERENCE TO GOVERNMENTAL SUPPORT

(none)

REFERENCE TO MICROFICHE APPENDIX

(none)

FIELD OF THE INVENTION

The present invention relates to monitoring of living subjects, and more particularly to health-monitoring of persons where measured or input health data is communicated by a wireless device to and from a software application running on an internet-connected server and where the same may be studied and processed by the software application, a health professional, or the subject.

BACKGROUND OF THE INVENTION

Several attempts have been made in the past to achieve efficient interactive communication of medical or health information between a subject or patient and a reviewer or provider of that information. In particular, communication of consumer physiological information has been a subject of such attempts. It is noted that in this regard the "reviewer or provider of medical or health information" is understood to include not only a physician but also a software application or algorithm that may analyze the information.

Medical or health information has been made available on a CD-ROM accessible by a home computer system. This passive approach had certain disadvantages. First, although the personal computer is prevalent is the United States, it is generally too expensive for a consumer physiological monitoring system and there are many people who find it too complicated to set up and use for that purpose. High-risk, chronically ill patients, responsible for more than half of health care costs in the United States and forming the fastest growing segment of those requiring health care, are indeed the most likely not to be able to afford or use a system built around a personal computer. In addition, such systems are limited in their interactivity to the information stored on the CD.

Previous patents by the Inventor addressed both of these disadvantages, as well as the need to reduce health care costs through providing educational health care information and interactive physiological monitoring in the home environment by means of a user-friendly, interactive system (see, e.g., U.S. Pat. Nos. 5,601,435, 6,144,837, and continuations thereof).

These previous patents were based on a video game console, or a multimedia player using a conventional television screen as the display device to achieve a system which is simpler to use than systems based on a personal computer. An initial embodiment of the previous patents utilized a compact disc to provide interactive information for disease management.

Even with the advantages provided, these systems limited the user to location in which the device was located. Even where devices are portable, as in the case of a laptop computer with a modem, an ordinary POTS phone line must be found and used. Where the user's computer employs a broadband connection, such as DSL or satellite, the choices of location are even more limited.

Attempts have been made to remedy this deficiency. For example, many telemetry systems allow a "wireless" distance to be placed between a health measuring unit and a remote monitoring system. However, such systems are limited in their range.

Other systems have used cellular telephone technology to increase the wireless health monitoring range. However, these systems have several deficiencies, such as requiring significant modification of the mobile phone. For example, U.S. Pat. No. 5,772,586, issued Jun. 30, 1998 to Heinonon et al., discloses a method for monitoring the health of a patient. This system uses a specialized connection between the patient health measuring unit and the cellular phone, however. The patient health measuring unit is located in the battery space of the mobile phone and is connected to a communication bus of the mobile phone. Other systems have been proposed, but these suffer from similar deficiencies in that they are not designed to be used with "off-the-shelf" wireless devices or health measuring equipment.

The deployment of the above systems also currently lacks employment of full back-end server functionality with which to provide a wide range of interactive communication with the patient. Instead, such systems, if internet-enabled, are often limited to mere one-way non-interactive data transfer via a modem. While some systems are more enhanced, including that disclosed in U.S. Pat. No. 5,357,427, issued Oct. 18, 1994 to Langen, et al., and entitled "Remote Monitoring of High-Risk Patients using Artificial Intelligence", these systems are limited by the wired telecommunications infrastructure.

SUMMARY OF THE INVENTION

Embodiments of the present invention overcome one or more of the disadvantages of the prior art by providing a full-feature health-monitoring system that may wirelessly connect to a back-end server application via the internet. The invention allows wireless access to and from a wide variety of present medical or health-related instruments and devices, while maintaining the capability of connecting to future such devices.

In particular, the invention may be embodied in several systems. Two complementary such systems are described herein, although extensions to other such systems can be envisioned. First, an embodiment of the invention may be employed to manage the disease state or condition of a patient. In this embodiment, the patient may employ a health monitoring device ("HMD"), in particular a medical device, and a wireless connection provides data from the medical device for processing via the internet including a review by a physician or other health care professional if required.

In the second embodiment, a health or lifestyle management plan may be implemented. Various health parameters, such as those relating to nutrition or exercise, may be entered into a health monitoring device, in this instance termed an "exercise machine", and the same may be wireless communicated to a server. An application may process and store the health parameters, and a health specialist may optionally review the same.

Wireless internet connectivity has many advantages. For example, in the first embodiment, a diabetic could connect a blood glucose meter to an internet-enabled wireless web device ("WWD") away from home and download data to a Diabetes Management Company's server and, in response, receive guidance displayed on the screen (or by voice) about choices for the next meal.

Alternatively, in the second embodiment, a person interested in tracking an exercise program may take the WWD to the local health club and attach the same to an exercise machine, send data output from various exercise machines over the Internet, and receive a personalized response from the server of a company specializing in Health & Lifestyle Management. The individual may input caloric content of foods eaten, and may further input caloric content of exercise performed. In this way, e.g., a person in a weight-loss program may see in great detail whether they are expending more calories in the form of exercise than the same individual is consuming in the form of food.

In general, in the health management embodiment, the system may be employed to monitor the physiologic status of a healthy subject while eating, exercising, or performing other activities. For clarity, such devices are termed herein "exercise machines". These may include an electronic body weight scale, a body fat gauge, biofeedback devices, physiotherapy or chiropractic equipment, blood pressure recorders, or the like, or any type of exercise machine or monitor, including a heart rate monitor, treadmill, rowing machine, stepper, or the like.

In more detail, the present invention provides a method and system for assisting patients to manage a disease or maintain healthy lifestyle by collecting health-related data and providing information in response to those data by means of a WWD designed to display interactive information through a connection to the Internet. The present invention may be connected to various HMDs, both medical and exercise-related in nature, and may communicate information via a wireless connection such as a wireless Internet connection.

A major advantage of embodiments of the invention is that the same frees the patient from the constraints of wired systems. The same allows users with consumer "off-the-shelf" wireless devices to significantly extend the range of connectivity over that of wired computer, television, or even wireless telemetry systems.

In a first embodiment of the present invention, the WWD is a web-enabled cellular phoue. Here it is noted that the term "web" or "internet" are used interchangeably to refer to the internet in general. In a second embodiment, the WWD is a palm, handheld, or laptop computer, or a PDA, equipped with a wireless modem. In a third embodiment, the WWD may be a hybrid device that combines the functions of a computer, PDA and telephone.

An adaptor is used if necessary to convert the output signal of the medical monitoring device to a suitable input signal for the WWD. The adaptor allows connection of the WWD to a medical device, exercise machine or other variety of health care equipment, and the connection may be made via several techniques. As for wired techniques, a standard parallel bus or serial cable may be used if the input/output ports between the HMD and the WWD are appropriate. Otherwise, a suitable separate adaptor may be employed.

The connection may also be an input such as a disk drive or other media input for input of data, a USB port or phone jack or other such wired input, again employing an adaptor if required.

As for wireless techniques, infrared (IR), microwaves, radio frequency (RF), e.g., Bluetooth® or 802.11 protocols, optical techniques including lasers, and other such techniques may be used. The patient or subject may also input data manually, such as by a stylus, keypad, synchronization from a PC, or by various other techniques discussed below.

A major advantage of the invention is that by use of an optional adaptor, the system is compatible with current and prior HMDs as well as maintaining a capability of adapting to future such systems.

Other advantages of the invention may include one or more of the following. An embodiment of the invention may be used when a patient is traveling or otherwise away from their "wired" means of communication. The invention allows wireless health-monitoring to the level of accuracy previously achieved only by desktop so-called "wired" computer systems. The invention is protocol-independent.

The interaction between a WWD and a back-end server may provide a major additional advantage in certain embodiments of the invention. In particular, the relatively small amount of memory currently provided on a WWD as compared to a back-end server severely limits the functionality of applications running on the WWD, especially in terms of computing capacity, processing power, and user interface. By providing significant application functionality on the back-end, less memory and processing capabilities become necessary on the WWD (i.e., on the "front-end"). Thus, memory may be used in the WWD for an enhanced user interface or for other purposes, according to the user requirements.

In a method according to an embodiment of the invention, the patient connects to a specific Internet site and a software program, resident on a remote server located on the Internet, downloads an interactive user interface for that patient and an application for the measurement of the physiological data. The software may also be downloaded to the WWD from a personal computer via a synchronization operation in known fashion. The software provides a personalized display for the user and configures the WWD to control and monitor devices connected via a generic input/output port to the WWD. The software may be designed to suit the constraints of the small display screens of WWDs. The software, as well as inputs from the patient or other inputs, can control the manner, content, and display of information presented to the patient, and measured or input data can be stored for review by a health care provider or by a software algorithm or application. The algorithm may be of varying complexity, from a simple program that merely acknowledges receipt of information to an artificial intelligence algorithm, such as an expert system, collaborative filtering system, rules based system, case-based reasoning system, or other such artificial intelligence application.

Further information may be provided to or from the patient, including information entered manually. The patient may input this information via a personal computer, which then may download the input information to the WWD via a synchronization operation using standard protocols, such as those for Palm PDA devices.

The user may also input supplemental information via a PC connected independently to the server via the internet. Such supplemental information may include data that is difficult or inconvenient to input on the WWD. In this way, the patient may be afforded a more convenient environment in which to manipulate data to supplement the data input to the WWD. The deployment of voice processing technology may be used to enable an even more convenient user interface: i.e., one to which patients can talk.

In all of these respects, the portable aspect of the WWD is important: to wit, the user may conveniently carry the WWD on their person wherever they may go, allowing data entry at the time needed.

Other aspects, features, and advantages will be apparent from the summary above, as well as from the description that follows, including the figures and the claims.

BRIEF DESCRIPTION OF THE DRAWINGS

FIG. **1** illustrates a general embodiment of a wireless health-monitoring system according to the present invention;

FIG. **2** illustrates an enbodiment of a wireless health-monitoring apparatus according to the present invention, showing the system of FIG. **1** up to a point of a wireless antenna;

FIG. **3** illustrates an embodiment of a back end of a health-monitoring system according to the present invention;

FIG. **4** illustrates a data flow diagram according to an embodiment of the present invention;

FIG. **5** illustrates an embodiment of a method of use for a wireless application and a server application according to the present invention, in which the same is implemented for disease and patient management;

FIG. **6** illustrates an embodiment of a method of use for a wireless application and a server application according to the present invention, in which the same is implemented for health management;

FIG. **7** illustrates an embodiment of a wired connection between a HMD and a WWD, also showing an optional adaptor; and

FIG. **8** illustrates an embodiment of a wireless connection between a HMD and a WWD, also showing an optional adaptor.

DETAILED DESCRIPTION OF THE PREFERRED EMBODIMENTS

Various acronyms are used for clarity herein. Definitions are given below.

The term "HMD" may encompass not only devices with physiologic sensors but also devices with a keypad, keyboard, mouse, pointer, pressure sensor, or other such inputs that the patient or user may employ to perform data entry of the desired parameters. In general, HMDs include some means for determining a health parameter.

In a disease management embodiment, an HMD may be a blood glucose monitor, a blood pressure monitor, an ambulatory ECG recorder, a respiratory monitor, a temperature or heart rate monitor, and so on.

In a healthy lifestyle management embodiment, an HMD may be an exercise machine, including treadmills, rowers, steppers, exercise cycles, or other aerobic or anaerobic exercisers, or a monitor, include monitors for temperature, heart rate, blood pressure, amount of work or rate of work performed, etc.

The term "subject" as used herein primarily indicates a human subject. The same may be a medical patient under physician care, a person interested in maintaining health via accurate recording of nutrition and exercise, and so on. The term "user" is generally used to refer to the user of the device, which may be synonymous with the subject or may alternatively be a caregiver of the subject, etc. The term "patient" is used, in addition to a person under the care of a physician, to also refer to a "normal" or healthy individual who is interested in maintaining a healthy physiologic balance.

The term "signal communication" is used to mean any type of connection between components where the connection is, e.g., electromagnetic, and where the connection allows information to be passed from one component to another. This term may be used in a similar fashion as "coupled", "connected", "information communication", "data communication", etc. The following are examples of signal communication schemes. As for wired techniques, a standard bus or serial cable may be used if the input/output ports are compatible and an optional adaptor may be employed if they are not. As for wireless techniques, IR, microwaves, RF, e.g., Bluetooth® or 802.11 protocols, optical techniques including lasers, and other such techniques may be used. The patient or subject may even input data manually, such as by a stylus or keypad or by various other techniques discussed above and below.

The term "generic input/output port" is used to mean any type of convention, standard, universal, stock, consumer, or "off-the-shelf" type of port for data input and output. These may include both wired and wireless ports. A further description is given below.

Various embodiments of the invention are now described in more detail.

Referring to FIG. **1**, a system of the present invention is shown for monitoring health data from a patient or subject **38**. The system includes a wireless health-monitoring apparatus ("WHMA") **10** described in further detail below. WHMA **10** is linked in a wireless fashion to a wireless connection point of presence ("POP") **19**, the same including at least a base station antenna **15** coupled to a server **17**. Server **17** is in turn connected to the wired, or even a wireless (not shown) Internet **21**, which may include the World Wide Web.

Referring to FIG. **2**, an first embodiment of WHMA **10** is shown. WHMA **10** includes an HMD **11**, which may include an optional monitor screen **40**, coupled via an optional adaptor **42** to a WWD **12**. WWD **12** connects wirelessly via an antenna **60** to base station **15** (see FIG. **1**). One function of WWD **12** is to provide the user interface; other functions are described below.

As noted above, HMD **11** may include a physiologic sensor **24** or may include a manual system **36** for input of physiologic data via a connection **34**. Manual system **36** may also be used to input data directly into WWD **12** via a connection **32**. Manual system **36** may include, e.g., a keyboard **30**, a mouse **26**, a pen-type device **28**, and may also employ a separate monitor (not shown). Of course, the user may also view information on monitor **40** or on a screen **41** of WWD **12**. In many embodiments, the stylus-based system employed by many current PDA's, such as the Palm® , may be preferred for such manual data input.

Data may also be input via entry on a computer **37**. This data may then be synchronized to WWD **12** in known fashion. Alternatively, computer **37**, or another computer (see computer **37'** in FIG. **4**) may be used to connect to a server using the wired internet. This use may be particularly advantageous when entering a large amount of data, such as a patient's medical history. As noted above, in this way the patient may be afforded a more convenient environment in which to manipulate data to supplement the data input to the WWD.

It will be clear to one of skill in the art given this teaching that cable **32**, as well as cables **34** and **44**, may be replaced with wireless circuitry to communicate signals wirelessly.

For medical devices and applications, physiologic sensor **24** may include, e.g., a sensor appropriate for measuring blood glucose levels, blood pressure, heart rate, or any other desired parameter as required by the physician. Sensor **24** may connect via an optional cable **44** to subject **38**. Alternatively, sensor **24** may be distal of HMD **11**, i.e., at or within subject **38**. In other words, if cable **44** is employed, sensor **24** may be proximal or distal of cable **44**. If a wireless communications capability is added, sensor **24** need not physically connect with HMD **11** or WWD **12** at all. That is, the same may measure a health parameter and may communicate the same to wireless health-monitoring apparatus **10** wirelessly. The short range wireless communications schemes which may be employed include infrared, radio frequency including Bluetooth or 802.11, or other such schemes.

As examples of sensor types, to measure blood glucose levels, sensor **24** may be a sensor that accepts a drop of blood, e.g., via a finger-prick. To measure heart rate, sensor **24** may be placed via an adhesive sensor disposed on the chest. Other health monitors may also be employed so long as the measured data may either be transferred to WWD **12**, e.g., via optional adaptor **42**, described in further detail below, or by being read by a user, e.g., from a display, and manually input to WWD **12**. Alternatively, the measured data may be transferred to WWD **12** via wireless communication schemes, such as RF includes Bluetooth® or 802.11, infrared, optical, microwaves, etc., directly from sensor **24** or from HMD **11** as described in greater detail below.

The user, who may or may not be the same person as subject **38**, may input data to WWD **12** from history or experience. For example, in a health or exercise device, if subject **38** consumes a known number of calories, this information may be entered via manual system **36** directly into WWD **12** or into HMD **11**. Further, the user, the subject, and the sensor are not necessarily the sole sources of information. Data stored on the server, or on a separate server operated for health management may also be employed to result in a health benefit to subject **38**.

Referring to FIG. **3**, WHMA **10** is shown communicating wirelessly with the Internet. In doing so, WHMA **10** generally sends a wireless signal to a base station **14** (in known fashion) that is connected to a server **18** that is in signal communication (in known fashion) with the internet. Server **18** communicates via a protocol (in known fashion) to Internet **20**, which also communicates via a protocol (in known fashion) to a server **22** running an application **62**. Server **22** may be accessed (in known fashion) by a client computer **44** through a connection **64**.

As noted, the protocols for data communication are known. However, they currently vary amongst known techniques. The present invention is not limited to any particular protocols, and may be implemented in any languages supported by the WWD and server. Of course, as computing capabilities continue to increase, it is expected that the capabilities of WHMA **10**, servers **18** and **22**, as well as application **62** and client **44**, and other components, will correspondingly increase.

Application **62** running on server **22** may interact with WHMA **10** in a number of ways. Referring to FIG. **4**, WHMA **10** is shown in signal communication with server **22** via a connection **72**. Connection **72** schematically represents the wireless Internet connection and intervening pathways. WHMA **10** includes an application that may be viewed as having two components: a base wireless or device application **70** and an application presentation layer or user interface **68**. User interface **68** is employed to, e.g., present a menu of options to the user, to allow the user to choose inputs, and to generally operate the device. User interface **68** may vary widely in sophistication, e.g., from a simple data entry field to a full graphical user interface. These applications may accept as inputs data from a sensor **24** as well as from a manual input **36**.

Server **22** has a base server application **62** with which the same calculates or provides a response based at least in part on data from WHMA **10**. Application **62** may include an algorithm **63** for analyzing data from the HMD, and either application **62** or algorithm **63** may optionally access data from an external data source **74** and may further consult an artificial intelligence system **76**.

External data source **74** may be a memory or disk or other such storage that stores health data, such as healthy and unhealthy weight/height ranges, healthy and unhealthy cholesterol counts, the patient's or subject's prior medical or health history, healthy and unhealthy blood pressure values, information corresponding to the caloric and other nutritional content of foods, information corresponding to the caloric expenditure values of various exercises, algorithms for calculating various health parameters, etc. In general, any data that may benefit the health of a subject or patient may be stored in external data source **74**. External data source **74** may also include online access of health information from external web sites, ftp servers, or other sources.

Due to the current relatively small amount of memory and storage available on current WWDs, such external application processing as by application **62** and external data storage as by external data **74** may be particularly important.

As noted, application **62** or algorithm **63** may also consult AI system **76** for suggestions as to health benefits. AI system **76** may even interact with external data source **74** to extract useful information from the same. AI system **76** may employ, e.g., case-based reasoning, rules-based systems, collaborative filtering, neural networks, expert systems, or other such systems as are known.

It should also be noted that each of application **62**, algorithm **63**, external data source **74**, or AI system **76**, may physically reside on more than one server, e.g., on an array of servers for, e.g., storage or multiple processing purposes. Each of application **62**, algorithm **63**, external data source **74**, or AI system **76**, or combinations of each, may also respectively reside on different servers.

The extent to which server application **62** interacts with wireless application **70** depends on the use to which the system is put. For example, in a less interactive embodiment, device application **70** may act to measure a diabetic patient's blood glucose level and report the same to server application **62**. In this case, a physician may simply review the measured value and send the patient an email reporting that the value is acceptable or not. In a highly interactive embodiment, a patient may have numerous HMDs **11** connected via optional adaptors to a WWD **12**, and wireless application **70** may correspondingly send a large amount of health data to server application **62**. The physician, accessing server application **62**, may in turn send detailed care plans to a caregiver via connection **72**. The received data may be analyzed using algorithm **63**, external data source **74**, and AI system **76**. In this sense, the two applications may be highly interactive.

It is noted that an Application Service Provider (ASP) may operate application **62**. That is, application **62** may be leased by an ASP to the health care provider, and the ASP may perform all necessary upgrades and maintenance to application **62** and its associated components.

To initialize the system, the program starts and a wireless application is loaded into the WWD. The loading of the wireless application may occur via synchronization from a desktop or via downloading from a server over the internet. The server application may be loaded into an appropriate internet-connected server. Subject data may be loaded into the WWD or into the server. In the latter case, the subject information may later be transferred to the WWD or transferred to the server from the WWD, as called for by the application. The initialization scheme then ends.

The wireless application may access the server and server application, or vice-versa, as determined by the respective program instructions. Examples are now given for (1) a system of disease and patient management and (2) a system for health management employing an exercise machine.

Example Employing System for Disease Management

Referring to FIG. **5**, an example is given for a system of disease and patient management. In this figure, as well as in FIG. **6**, boxes in dotted lines may generally be considered optional.

In FIG. **5**, a medical device may determine health parameters and an optional physician review is provided. Health parameters may also be determined by user manual input.

The program is started (step **142**) and a sensor measures a health parameter (step **116**). The sensor may send the parameter to a medical device (step **118**). The medical device then sends the parameter to the WWD (step **120**). The WWD then wirelessly communicates the parameter to the application server (step **122**), e.g., via the wireless web. The application server processes the parameter (step **124**), and calculates or provides a response (step **126**) based at least in part on the parameter. The application server may optionally employ algorithm **63** (step **125**), external data (step **132**) or an AI system (step **134**) in the calculation. The application server then sends the response to the WWD (step **128**), where the response is displayed (step **130**).

It should be noted that the term "response" here is used generally may simply be an acknowledgement that the parameter was received by the application server. The term "calculate" is also used generally, and may entail a simple calculation as well as a complex one. A result may, e.g., be the result of a calculation.

As noted above, the sensor may connect to any type of medical device or other such device in which information pertaining to a patient's disease or condition may be ascertained. The parameter may be any value corresponding to such information.

The method may also use a manual input as shown. In this case, after the start (step **142**) of the application, the user may interact with the WWD (step **140**). The interact may be a data input, a command to read data from a medical device, a response to a physician question or statement, an acknowledgement of physician notification, etc. Calculations by the application server may further take into account supplemental data sent by the user to the server, e.g., in a wired fashion directly over the internet (step **141**).

FIG. **5** also shows a physician review and notification. In this option, the responses are displayed on a client computer (step **136**) in signal communication with the application server. A physician may then review the response on the client computer, and notify the patient of the responses (step **138**). For example, the physician may notify the patient of positive or negative responses. Of course, it should be noted that the "client computer" may simply be a pager, PDA, WWD, or other such device, as well as a more typical desktop or laptop computer.

In one implementation, a diabetic may keep a database on a server of a dietary history and a blood glucose history. With this data at-hand wirelessly, the diabetic may choose whether to eat a particular food by entering nutritional information about the food into a WWD, transmitting the same wirelessly to the server, and receiving a recommendation from the server. The recommendation may be based on the food and also on data or information that had previously been transmitted wirelessly, including data from a blood glucose monitor, data input manually, if any, as well as data from algorithm **63**, external data source **74**, and AI system **76**.

Example Employing System for Health Management using a General Exercise Machine

Referring to FIG. **6**, an example is given for a system of health, nutrition, and/or exercise management. In this example, the HMD is an exercise machine as that termed has been defined above.

The program is started (step **242**) and a sensor measures a health parameter (step **216**), where the health parameter corresponds to health, fitness, nutrition, exercise, etc. The sensor may send the parameter to the exercise machine (step **218**). It is understood here that the "sensor" may be, e.g., a blood pressure monitor, but may also be a simple device connected to an aerobic exerciser that tracks miles ran, work performed, etc.

The exercise machine then sends the parameter to the WWD (step **220**). The WWD wirelessly communicates the parameter to the application server (step **222**), e.g., via the wireless web.

An alternative and complementary way of entering the parameter is by user input (step **248**). For example, the user may enter the parameter into the exercise machine or into the WWD. This parameter may correspond to an amount of exercise performed, an amount of food consumed, etc.

Calculations by the application server may also take into account supplemental data sent by the user to the server, e.g., in a wired fashion directly over the internet (step **241**).

The application server processes the parameter (step **224** and optionally step **225**), and calculates a response (step **226**) based at least in part on the parameter. The application server may optionally employ external data (step **232**) or an AI system (step **234**) in the calculation. The application server then sends the response to the WWD (step **228**), where the response is displayed.

The same definitional statements regarding the terms "response", "calculate", "sensor", etc., as given before, apply in this embodiment as well.

As an optional step, a health specialist may notify the patient or subject of the response (step **238**) after having the same displayed on their client computer (step **236**). The health specialist may be replaced in this example by an application that may also include an algorithm.

Adaptor Hardware

A description is given below of a particular type of adaptor hardware. As noted above, the adaptor may optionally be used to connect a HMD to a WWD.

In general, a connection is necessary between a HMD **11** and a WWD. The nature of this connection may vary. For example, the connection may be wired or wireless. For wired systems, the connection may be direct or an adaptor may be employed, either on one or both ends of the direct wired connection, to adapt the signal appropriately. In the same way, for wireless systems, the connection may be direct, if both HMD and WWD employ the same wireless protocol, or an adaptor may be involved to modify the signal of one or both devices. These connections, all of which are encompassed by the present invention, are discussed in more detail below.

Referring to FIG. **7**, an embodiment of the connection is shown. In this figure, a hardware (or "wired") connection is shown, i.e., an adaptor **168**, disposed between a HMD **160** and a WWD **162**. In most circumstances, it is assumed that the varieties of HMDs will vary more widely than the varieties of WWDs. Accordingly, HMD **160** will likely have one of a variety of types of connectors for input/output purposes, here shown as a connector **164**. Connector **164** mates with a connector **172** of adaptor **168**. At another point on adaptor **168** is a connector **172'** for connecting to a generic input/output port **164'** on WWD **162**. A cable **170** is disposed between the two connectors, cable **170** capable of including adaptor circuitry if desired.

Of course, the use and structure of adaptor **168**, between HMD **160** and WWD **162**, depends on factors such as the prevalence of an industry standard for such communications. In other words, if the output of HMD **160** is readily acceptable to WWD **162**, then the same may be directly connected or may be connected via a simple cable, the same basically extending from pin-to-pin. For example, a standard parallel bus or serial cable may be used if the input/output ports between the HMD and the WWD, which may be, e.g., RS232, are compatible. Otherwise, a suitable adaptor circuit as noted above may be employed. The connection may also be an input such as a disk drive or other media input for input of data, a USB port or phone jack or other such wired input, again employing an adaptor circuit if required.

It is noted as exemplary that several of the most prevalent PDA's currently employs the Palm® operating system. The same may be connected to the Internet in a wireless fashion using one of several available networks. In one version of a Palm® device, a 10-pin RS-232 serial port is provided. In this version of the Palm®, port **164'** can be used to communicate with HMD **160** and connector **164** via the optional adaptor **168** according to the following pin-out:

Pin	Name	Function
1	DTR	Data Terminal Ready signal
2	VCC	3.3 Volts
3	RD (in)	Receive data
4	RTS (out)	Request to send
5	TD (out)	Transmit data
6	CTS (in)	Clear to send
7	GP1 (in)	Interrupt line
8	GP2 (in)	modem sync
9	unused	unused
10	GND	signal ground

On the other side of optional adaptor **168**, i.e., HMD **160**, connector **164** may vary more widely. It is noted that certain exercise machines are equipped with DB9 or DB25 RS232 serial connectors. In this case, the pin-outs are (for a DB25):

Pin	Name	Function
1	—	Protective/shielded ground
2	TD	Transmit Data (a.k.a TxD, Tx)
3	RD	Receive Data (a.k.a RxD, Rx)
4	RTS	Request To Send
5	CTS	Clear To Send
6	DSR	Data Set Ready
7	SGND	Signal Ground
8	CD	Carrier Detect (a.k.a DCD)
9		Reserved for data set testing
10		Reserved for data set testing
11		Unassigned

-continued

Pin	Name	Function
12	SDCD	Secondary Carrier Detect
13	SCTS	Secondary Clear to send
14	STD	Secondary Transmit Data
15	DB	Transmit Clock (a.k.a TCLK, TxCLK)
16	SRD	Secondary Receive Data
17	DD	Receive Clock (a.k.a. RCLK)
18	LL	Local Loopback
19	SRTS	Secondary Request to Send
20	DTR	Data Terminal Ready
21	RL/SQ	Signal Quality Detector/Remote loopback
22	RI	Ring Indicator (DCE raises when incoming call detected used for auto answer applications)
23	CH/CI	Signal Rate selector
24	DA	Auxiliary Clock (a.k.a. ACLK)
25		Unassigned

A connection may simply be made by providing optional adaptor **168** with adaptor circuitry, such as within cable **170** or within a circuit box therein, so as to match up the appropriate or complementary pins.

In other embodiments, such as for devices connected to proprietary connectors, a less standard and perhaps proprietary pin-out may be required.

Referring to FIG. **8**, an embodiment of a wireless implementation of the WHMA **10** is shown. In FIG. **8**, a wireless connection is shown between HMD **160** and WWD **162**. HMD **160** may have an integral wireless modulator/demodulator disposed within (not shown). More likely, however, is that HMD **160** has an adaptor **154** connectable thereto which performs these functions. Adaptor **154** may plug into a connector **165** on HMD **160**. WWD **162** may have an integral wireless modulator/demodulator (not shown), although an adaptor can also be used in this context. If an adaptor is used, the same may plug into generic input/output port **164'**.

While the device shown in FIG. **8** is described in the context of general wireless communications, various protocols may be employed. For radio frequency communications, protocols such as Bluetooth® or 802.11 may be advantageously employed. Other techniques employing a similar configuration include those employing IR, microwaves, optical techniques including lasers, and so on.

It should be understood that the above is merely exemplary, and that the form of the adaptor may vary widely between HMDs and WWDs.

It will be understood that the above description of a "Method and Apparatus for Health and Disease Management Combining Patient Data Monitoring with Wireless Internet Connectivity" has been with respect to particular embodiments of the invention. While this description is fully capable of attaining the objects of the invention, it is understood that the same is merely representative of the broad scope of the invention envisioned, and that numerous variations of the above embodiments may be known or may become known or are obvious or may become obvious to one of ordinary skill in the art, and these variations are fully within the broad scope of the invention. For example, while certain wireless technologies have been described herein, other such wireless technologies may also be employed. Furthermore, while various types of medical devices have been mentioned, numerous other types may also be used in the embodiments of the invention, including pulse

oximeters, syringe drivers, infusion pumps, spirometers, ventilators, anesthesia monitors, and so on. Accordingly, the scope of the invention is to be limited only by the claims appended hereto, and equivalents thereof. In these claims, a reference to an element in the singular is not intended to mean "one and only one" unless explicitly stated. Rather, the same is intended to mean "one or more". All structural and functional equivalents to the elements of the above-described preferred embodiment that are known or later come to be known to those of ordinary skill in the art are expressly incorporated herein by reference and are intended to be encompassed by the present claims. Moreover, it is not necessary for a device or method to address each and every problem sought to be solved by the present invention, for it to be encompassed by the present claims. Furthermore, no element, component, or method step in the present invention is intended to be dedicated to the public regardless of whether the element, component, or method step is explicitly recited in the claims. No claim element herein is to be construed under the provisions of 35 U.S.C. §§112, ¶6, unless the element is expressly recited using the phrase "means for".

What is claimed is:

1. A internet-enabled wireless web device for monitoring health, the internet-enabled wireless web device connected in wireless communication with a server running an application, comprising:

A web-enabled cellular phone running an application, the application functioning to accept inputs from a first communications port and a second communications port, the first communications port including a generic input/output port and the second communications port including a wireless link to a network, the generic input/output port for receipt of a health parameter, the health parameter corresponding to a patient's disease state or condition, or to a patient's health, nutrition, fitness or exercise state or condition.

2. A internet-enabled wireless web device for monitoring health, the internet-enabled wireless web device connected in wireless communication with a server running an application, comprising:

A hybrid handheld computer and cellular telephone combination running an application, the application functioning to accept inputs from a first communications port and a second communications port, the first communications port including a generic input/output port and the second communications port including a wireless link to a network, the generic input/output port for receipt of a health parameter, the health parameter corresponding to a patient's disease state or condition, or to a patient's health, nutrition, fitness or exercise state or condition.

3. A computer program, residing on a computer-readable medium, containing instructions for causing a server in signal communication with the internet to:

Provide a device application and user interface to an internet-enabled wireless web device, wherein the user interface or device application contains instructions for causing the internet-enabled wireless web device to receive data from a generic input/output port;

Receive a signal corresponding to a health parameter from the internet-enabled wireless web device, the health parameter corresponding to a health, fitness, nutrition or exercise state or condition of a patient;

Calculate a response based at least in part on the received signal;

Communicate the response to the internet-enabled wireless web device; and

Display features according to the response.

4. The computer program of claim **3**, wherein the user interface or device application contains instructions for causing the internet-enabled wireless web device to receive data from the generic input/output port wherein the generic input/output port is in signal communication with a exercise machine that is selected from the group consisting of: treadmills, exercise cycles, steppers, rowers other aerobic exercisers, blood pressure monitors, body weight scales, heart rate monitors, temperature ruonitors, and combinations thereof.

5. A computer program, residing on a computer-readable medium, containing instructions for causing a server in signal communication with the internet to:

Provide a device application and user interface to an internet-enabled wireless web device, wherein the user interface or device application contains instructions for causing the internet-enabled wireless web device to receive data from a generic input/output port;

Receive a signal corresponding to a health parameter from the internet-enabled wireless web device, the health parameter corresponding to a disease state or condition of a patient;

Calculate a response based at least in part on the received signal;

Communicate the response to the internet-enabled wireless web device; and

Display features according to the response.

6. The computer program of claim **5**, wherein the user interface or device application contains instructions for causing the internet-enabled wireless web device to receive data from the generic input/output port wherein the generic input/output port is in signal communication with a medical device that is selected from the group consisting of: blood glucose monitors, blood pressure monitors, body weight scales, heart rate monitors, respiratory monitors, temperature monitors, ECG monitors, and combinations thereof.

7. A internet-enabled wireless web device for monitoring health, the internet-enabled wireless web device connected in wireless communication with a server running an application, comprising:

A personal digital assistant with wireless connectivity running an application, the application functioning to accept inputs from a first communications port and a second communications port, the first communications port including a generic input/output port and the second communications port including a wireless link to a network, the generic input/output port for receipt of a health parameter, the health parameter corresponding to a patient's disease state or condition, or to a patient's health, nutrition, fitness or exercise state or condition.

8. The system of claim **7**, wherein the generic input/output port employs a wireless communications scheme, and wherein the wireless communications scheme employed uses radio frequency.

9. The system of claim **7**, wherein the generic input/output port employs a wireless communications scheme, and wherein the wireless communications scheme employed uses the Bluetooth protocol.

10. The system of claim **7**, wherein the generic input/output port employs a wireless communications scheme, and wherein the wireless communications scheme employed uses the 802.11 protocol.

11. The system of claim **7**, wherein the generic input/output port employs a wireless communications scheme, and wherein the wireless communications scheme employed uses infrared.

12. The system of claim 7, wherein the generic input/output port includes a port for serial communications.

13. The system of claim 7, wherein the generic input/output port includes a port for parallel communications.

14. A wireless health-monitoring system for health management of a patient or subject, comprising:

An internet-enabled wireless web device, the internet-enabled wireless web device including a first communications port having a generic wireless input/output port and a second communications port having a circuit for wireless communications with a network, the iuternet-enabled wireless web device configured to store:

a health parameter, the health parameter corresponding to a fitness, nutrition, health, or exercise state or condition of a patient and determined by a health parameter determining means:

an application; and

a user interface; and

A server application, residing on a computer readable medium and disposed on a server in communication with the wireless network, for causing the server to:

Receive the determined health parameter;

Calculate a response based in part on the determined health parameter; and

Provide the response to the internet-enabled wireless web device.

15. The system of claim 14, wherein the wireless communications scheme employed by the generic wireless input/output port uses infrared.

16. The system of claim 14, wherein a communications scheme employed by the generic wireless input/output port uses radio frequency.

17. The system of claim 16, wherein the wireless communications scheme employed uses the Bluetooth protocol or the 802.11 protocol.

18. A wireless health-monitoring system for monitoring a disease state or condition of a patient, comprising:

An internet-enabled wireless web device, the internet-enabled wireless web device including a first communications port having a generic wireless input/output port and a second communications port having a circuit for wireless communications with a network, the internet-enabled wireless web device configured to store:

a health parameter, the health parameter corresponding to a disease state or condition of a patient and determined by a health parameter determining means:

an application; and

a user interface; and

A server application, residing on a computer readable medium and disposed on a server in communication with the wireless network, for causing the server to:

Receive the determined health parameter;

Calculate a response based in part on the determined health parameter; and

Provide the response to the internet-enabled wireless web device.

19. The system of claim 18, wherein the wireless communications scheme employed uses infrared.

20. The system of claim 18, wherein a communications scheme employed by the generic wireless input/output port uses radio frequency.

21. The system of claim 20, wherein the wireless communications scheme employed uses the Bluetooth protocol or the 802.11 protocol.

22. A method of wirelessly monitoring the disease state or condition of a patient, comprising:

Providing a user interface and application to an internet-enabled wireless web device;

Entering a health parameter to the internet-enabled wireless web device via a generic input/output port, the health parameter corresponding to a disease state or condition of a patient;

Wirelessly transmitting the health parameter to a server;

Receiving the determined health parameter at the server;

Calculating a response based on the determined health parameter; and

Delivering the response to the internet-enabled wireless web device.

23. The method of claim 22, wherein the entering also includes entering a health parameter manually.

24. The method of claim 22, further comprising entering supplemental health data into the server using a computer.

25. The method of claim 22, wherein the generic input/output port is in signal communication with a medical device.

26. The method of claim 25, wherein the generic input/output port is in signal communication with the medical device via a wired connection.

27. The method of claim 25, wherein the medical device is selected from the group consisting of: blood glucose monitors, body weight scales, blood pressure monitors, heart rate monitors, respiratory monitors, temperature monitors, ECG monitors, and combinations thereof.

28. The method of claim 25, further comprising transferring information between the medical device and the generic input/output port using an adaptor.

29. The method of claim 25, wherein the generic input/output port is in signal communication with the medical device via a wireless connection.

30. The method of claim 29, further comprising transferring information between the medical device and the generic input/output port using an infrared transmissions scheme.

31. The method of claim 29, further comprising transferring information between the medical device and the generic input/output port using a radio frequency transmission scheme.

32. The method of claim 31, wherein the radio frequency transmission scheme is selected from the Bluetooth protocol or the 802.11 protocol.

33. A method of wirelessly monitoring the health state or condition of a patient or subject, comprising:

Providing a user interface and application to an internet-enabled wireless web device;

Entering a health parameter from an exercise machine to the internet-enabled wireless web device via a generic input/output port, the health parameter corresponding to a health, nutrition, fitness or exercise state or condition of a patient;

Wirelessly transmitting the health parameter to a server;

Receiving the determined health parameter at the server;

Calculating a response based on the determined health parameter; and

Delivering the response to the internet-enabled wireless web device.

34. The method of claim 33, wherein the entering also includes entering a health parameter manually.

35. The method of claim 33, wherein the exercise machine is selected from the group consisting of: treadmills, rowers, steppers, exercise cycles, other aerobic exercisers, body

weight scales, blood pressure monitors, heart rate monitors, temperature monitors, and combinations thereof.

36. The method of claim **33**, further comprising transferring information between the exercise machine and the generic input/output port using an adaptor.

37. The method of claim **33**, further comprising entering supplemental health data into the server using a computer.

38. The method of claim **33**, wherein the generic input/output port is in signal communication with the exercise machine.

39. The method of claim **38**, wherein the generic input/output port is in signal communication with the exercise machine via a wired connection.

40. The method of claim **38**, wherein the generic input/output port is in signal communication with the exercise machine via a wireless connection.

41. The method of claim **40**, further comprising transferring information between the exercise machine and the generic input/output port using an infrared transmission scheme.

42. The method of claim **40**, further comprising transferring information between the exercise machine and the generic input/output port using a radio frequency transmission scheme.

43. The method of claim **42**, wherein the radio frequency transmissions scheme is selected from the Bluetooth protocol or the 802.11 protocol.

44. A wireless health-monitoring system for monitoring a disease state or condition of a patient, comprising:

An internet-enabled wireless web device, the internet-enabled wireless web device including a first communications port having a generic input/output port and a second communications port having a circuit for wireless communications with a network, the internet-enabled wireless web device configured to store:

a health parameter, the health parameter corresponding to a disease state or condition of a patient and determined by a health parameter determining means:

A device application; and

a user interface; and

A server application, residing on a computer readable medium and disposed on a server in communication with the wireless network, for causing the server to:

Receive the determined health parameter;

Calculate a response based in part on the determined health parameter; and

Provide the response to the internet-enabled wireless web device.

45. The system of claim **44**, wherein the generic input/output port includes a port for serial communications.

46. The system of claim **44**, wherein the generic input/output port includes a port for parallel communications.

47. The system of claim **44**, wherein the server application is provided and administered by an Application Service Provider.

48. The system of claim **44**, further comprising a manual system for input of the health parameter, the manual system in signal communication with the internet-enabled wireless web device.

49. The system of claim **44**, further comprising a computer for input of supplemental health data, the computer in signal communication with the internet-enabled wireless web device or the server.

50. The system of claim **44**, wherein the internet-enabled wireless web device is selected from the group consisting of: an internet-enabled cellular phone; a handheld, palm, or laptop computer having an optional implemented or integral wireless capability; and a hybrid device of a handheld computer and cellular telephone.

51. The system of claim **50**, wherein the internet-enabled wireless web device is a personal digital assistant with a wireless capability.

52. The system of claim **44**, wherein the server application is an application employing a plurality of nodes, and wherein the device application acts as a node of the server application.

53. The system of claim **52**, wherein the node is a node of a system selected from the group consisting of: an algorithm, an artificial intelligence system, an expert system, a rules-based system, a case-based reasoning system, and combinations thereof.

54. The system of claim **44**, wherein the generic input/output port includes a port for wireless communications.

55. The system of claim **54**, wherein the wireless communications scheme employed uses infrared.

56. The system of claim **54**, wherein a wireless communications scheme employed by the generic input/output port uses radio frequency.

57. The system of claim **56**, wherein the wireless communications scheme employed uses the Bluetooth protocol.

58. The system of claim **56**, wherein the wireless communications scheme employed uses the 802.11 protocol.

59. The system of claim **44**, further comprising a medical device, the medical device including the health parameter determining means, the medical device further comprising an output port to deliver data corresponding to the health parameter.

60. The system of claim **59**, wherein the output port of the medical device and the generic input/output port communicate via a wired link.

61. The system of claim **59**, wherein the medical device output is in signal communication with the generic input/output port of the internet-enabled wireless web device via a medium selected from the group consisting of: a storage device including a disk or tape, a USB connection, a phone connection, microwaves, optical techniques including lasers, manual input by a stylus, keypad, synchronization from a PC, and combinations thereof.

62. The system of claim **59**, further comprising a sensor for measuring the health parameter, the sensor having an output coupled to the medical device.

63. The system of claim **62**, wherein the sensor is for measuring a health parameter selected from the group consisting of: body weight, blood glucose level, heart rate, blood pressure, temperature, metabolic rate, respiratory rate, cholesterol, and combinations thereof.

64. The system of claim **59**, wherein the output port of the medical device and the generic input/output port communicate via a wireless link.

65. The system of claim **64**, wherein a wireless communications scheme employed by the generic input/output port and the output of the medical device uses infrared.

66. The system of claim **64**, wherein a wireless communications scheme employed by the generic input/output port and the output of the medical device uses radio frequency.

67. The system of claim **66**, wherein the wireless communications scheme employed uses the Bluetooth protocol or the 802.11 protocol.

68. The system of claim **59**, further comprising an adaptor for connection to the output port of the medical device, the adaptor having an output to deliver data corresponding to the health parameter.

69. The system of claim **68**, wherein the adaptor output and the generic input/output port communicate via a wired link.

70. The system of claim **68**, wherein the adaptor output is in signal communication with the generic input/output port of the internet-enabled wireless web device via a medium selected from the group consisting of: a storage device including a disk or tape, a USB connection, a phone connection, microwaves, optical techniques including lasers, manual input by a stylus, keypad, synchronization from a PC, and combinations thereof.

71. The system of claim **68**, wherein the adaptor output and the generic input/output port communicate via a wireless link.

72. The system of claim **71**, wherein a wireless communications scheme employed by the generic input/output port and the adaptor output uses infrared.

73. The system of claim **71**, wherein a wireless communications scheme employed by the generic input/output port and the adaptor output uses radio frequency.

74. The system of claim **73**, wherein the wireless communications scheme employed uses the Bluetooth protocol or the 802.11 protocol.

75. A wireless health-monitoring system for health management of a patient or subject, comprising:

An internet-enabled wireless web device, the internet-enabled wireless web device inclnding a first communications port having a generic input/output port for connection to an exercise machine and a second communications port having a circuit for wireless communications with a network, the internet-enabled wireless web device configured to store:

a health parameter, the health parameter corresponding to a health, exercise, nutrition or fitness state or condition of the patient and determined by a health parameter determining means:

A device application; and

a user interface; and

A server application, residing on a computer readable medium and disposed on a server in communication with the wireless network, for causing the server to:

Receive the determined health parameter;

Calculate a response based in part on the deterunined health parameter; and

Provide the response to the internet-enabled wireless web device.

76. The system of claim **75**, wherein the generic input/output port includes a port for serial communications.

77. The system of claim **75**, wherein the generic input/output port includes a port for parallel communications.

78. The system of claim **75**, wherein the server application is provided and administered by an Application Service Provider.

79. The system of claim **75**, further comprising a manual system for input of the health parameter, the manual system in signal communication with the internet-enabled wireless web device.

80. The system of claim **75**, further comprising a computer for input of supplemental health data, the computer in signal communication with the internet-enabled wireless web device or the server.

81. The system of claim **75**, wherein the internet-enabled wireless web device is selected from the group consisting of: an internet-enabled cellular phone; a handheld, palm, or laptop computer having an optional implemented or integral wireless capability; and a hybrid device of a handheld computer and cellular telephone.

82. The system of claim **81**, wherein the internet-enabled wireless web device is a personal digital assistant with a wireless capability.

83. The system of claim **75**, wherein the server application is an application employing a plurality of nodes, and wherein the device application acts as a node of the server application.

84. The system of claim **83**, wherein the node is a node of a system selected from the group consisting of: an algorithm, an artificial intelligence system, an expert system, a rules-based system, a case-based reasoning system, and combinations thereof.

85. The system of claim **75**, further comprising a sensor for measuring the health parameter, the sensor having an output coupled to the exercise machine.

86. The system of claim **85**, wherein the sensor is for measuring a health parameter selected from the group consisting of: body weight, heart rate, blood pressure, temperature, metabolic rate, amount of work performed, rate of work performed, cholesterol, and combinations thereof.

87. The system of claim **75**, wherein the generic input/output port includes a port for wireless communications.

88. The system of claim **87**, wherein the wireless communications scheme employed uses infrared.

89. The system of claim **87**, wherein a wireless communications scheme employed by the generic input/output port uses radio frequency.

90. The system of claim **89**, wherein the wireless communications scheme employed uses the Bluetooth protocol.

91. The system of claim **89**, wherein the wireless communications scheme employed uses the 802.11 protocol.

92. The system of claim **75**, wherein the exercise machine includes the health parameter determining means, the exercise machine further comprising an output port to deliver data corresponding to the health parameter.

93. The system of claim **92**, wherein the output port of the exercise machine and the generic input/output port communicate via a wired communications scheme.

94. The system of claim **92**, wherein the exercise machine output port is in signal communication with the generic input/output port of the internet-enabled wireless web device via a medium selected from the group consisting of: a storage device including a disk or tape, a USB connection, a phone connection, microwaves, optical techniques including lasers, manual input by a stylus, keypad, synchronization from a PC, and combinations thereof.

95. The system of claim **92**, wherein the output port of the exercise machine and the generic input/output port communicate via a wireless communications scheme.

96. The system of claim **95**, wherein a wireless communications scheme employed by the generic input/output port and the output of the exercise machine uses infrared.

97. The system of claim **95**, wherein a wireless communications scheme employed by the generic input/output port and the output of the exercise machine uses radio frequency.

98. The system of claim **97**, wherein the wireless communications scheme employed uses the Bluetooth protocol or the 802.11 protocol.

99. The system of claim **92**, further comprising an adaptor for connection to the output port of the exercise machine, the adaptor having an output to deliver data corresponding to the health parameter.

100. The system of claim **99**, wherein the adaptor output and the generic input/output port communicate via a wired communications scheme.

101. The system of claim **99**, wherein the adaptor output is in signal communication with the generic input/output port of the internet-enabled wireless web device via a medium selected from the group consisting of: a storage device including a disk or tape, a USB connection, a phone

connection, microwaves, optical techniques including lasers, manual input by a stylus, keypad, synchronization from a PC, and combinations thereof.

102. The system of claim **99**, wherein the adaptor output and the generic input/output port communicate via a wireless communications scheme.

103. The system of claim **102**, wherein the wireless communications scheme employed by the generic input/output port and the adaptor output uses infrared.

104. The system of claim **102**, wherein the wireless communications scheme employed by the generic input/output port and the adaptor output uses radio frequency.

105. The system of claim **104**, wherein the wireless communications scheme employed uses the Bluetooth protocol or the 802.11 protocol.

* * * * *

UNITED STATES PATENT AND TRADEMARK OFFICE

CERTIFICATE OF CORRECTION

PATENT NO. : 6,602,191 B2
APPLICATION NO. : 09/738270
DATED : August 5, 2003
INVENTOR(S) : Roger J. Quy

It is certified that error appears in the above-identified patent and that said Letters Patent is hereby corrected as shown below:

On Title Page, Item (73) Should Read, -- Q-tec Systems LLC, Wilmington, DE (US) --

Signed and Sealed this

Thirtieth Day of January, 2007

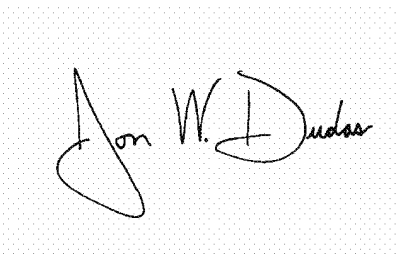

JON W. DUDAS
Director of the United States Patent and Trademark Office

Express Mail Label No. EK484587839US

12/19/00

UTILITY PATENT APPLICATION TRANSMITTAL
(Small Entity)

(Only for new nonprovisional applications under 37 CFR 1.53(b))

Docket No. 00125/002001

Total Pages in this Submission 62

A

JC979 U.S. PTO 12/15/00

09/738270 U.S. PTO 12/15/00

TO THE ASSISTANT COMMISSIONER FOR PATENTS
Box Patent Application
Washington, D.C. 20231

Transmitted herewith for filing under 35 U.S.C. 111(a) and 37 C.F.R. 1.53(b) is a new utility patent application for an invention entitled:

Method and Apparatus for Health and Disease Management Combining Patient Data Monitoring with Wireless Internet Connectivity

and invented by:

Roger J. Quy

If a CONTINUATION APPLICATION, *check appropriate box and supply the requisite information:*

☐ **Continuation** ☐ **Divisional** ☒ **Continuation-in-part (CIP)** of prior application No.: **60/172,486**

Which is a:

☐ **Continuation** ☐ **Divisional** ☐ **Continuation-in-part (CIP)** of prior application No.: _____

Which is a:

☐ **Continuation** ☐ **Divisional** ☐ **Continuation-in-part (CIP)** of prior application No.: _____

Enclosed are:

Application Elements

1. ☐ Filing fee as calculated and transmitted as described below

2. ☐ Specification having **51** pages and including the following:

   a. ☒ Descriptive Title of the Invention
   b. ☒ Cross References to Related Applications *(if applicable)*
   c. ☒ Statement Regarding Federally-sponsored Research/Development *(if applicable)*
   d. ☐ Reference to Microfiche Appendix *(if applicable)*
   e. ☒ Background of the Invention
   f. ☒ Brief Summary of the Invention
   g. ☒ Brief Description of the Drawings *(if drawings filed)*
   h. ☒ Detailed Description
   i. ☒ Claim(s) as Classified Below
   j. ☒ Abstract of the Disclosure

UTILITY PATENT A.. LICATION TRANSMITTAL
(Small Entity)

(Only for new nonprovisional applications under 37 CFR 1.53(b))

Docket No.
00125/002001
Total Pages in this Submission
62

Application Elements (Continued)

3. ☒ Drawing(s) *(when necessary as prescribed by 35 USC 113)*
   a. ☒ Formal b. ☐ Informal Number of Sheets 8
4. ☐ Oath or Declaration
   a. ☐ Newly executed *(original or copy)* ☐ Unexecuted
   b. ☐ Copy from a prior application (37 CFR 1.63(d)) *(for continuation/divisional application only)*
   c. ☐ With Power of Attorney ☐ Without Power of Attorney
   d. ☐ *DELETION OF INVENTOR(S)*
   Signed statement attached deleting inventor(s) named in the prior application, see 37 C.F.R. 1.63(d)(2) and 1.33(b).
5. ☐ Incorporation By Reference *(usable if Box 4b is checked)*
   The entire disclosure of the prior application, from which a copy of the oath or declaration is supplied under Box 4b, is considered as being part of the disclosure of the accompanying application and is hereby incorporated by reference therein.
6. ☐ Computer Program in Microfiche
7. ☐ Genetic Sequence Submission *(if applicable, all must be included)*
   a. ☐ Paper Copy
   b. ☐ Computer Readable Copy
   c. ☐ Statement Verifying Identical Paper and Computer Readable Copy

Accompanying Application Parts

8. ☐ Assignment Papers *(cover sheet & documents)*
9. ☐ 37 CFR 3.73(b) Statement *(when there is an assignee)*
10. ☐ English Translation Document *(if applicable)*
11. ☐ Information Disclosure Statement/PTO-1449 ☐ Copies of IDS Citations
12. ☐ Preliminary Amendment
13. ☐ Acknowledgment postcard
14. ☒ Certificate of Mailing
    ☐ First Class ☒ Express Mail *(Specify Label No.):* EK484857839US

UTILITY PATENT APPLICATION TRANSMITTAL
(Small Entity)

(Only for new nonprovisional applications under 37 CFR 1.53(b))

Docket No. 00125/002001

Total Pages in this Submission 62

Accompanying Application Parts (Continued)

15. ☐ Certified Copy of Priority Document(s) *(if foreign priority is claimed)*

16. ☐ Small Entity Statement(s) - Specify Number of Statements Submitted: _____

17. ☐ Additional Enclosures *(please identify below):*

Fee Calculation and Transmittal

CLAIMS AS FILED

For	#Filed	#Allowed	#Extra	Rate	Fee
Total Claims	105	- 20 =	85	x $9.00	$765.00
Indep. Claims	10	- 3 =	7	x $40.00	$280.00
Multiple Dependent Claims (check if applicable) ☐					$0.00
				BASIC FEE	$355.00
OTHER FEE *(specify purpose)* _____					$0.00
				TOTAL FILING FEE	$1,400.00

☐ A check in the amount of to cover the filing fee is enclosed.

☐ The Commissioner is hereby authorized to charge and credit Deposit Account No. as described below. A duplicate copy of this sheet is enclosed.

- ☐ Charge the amount of as filing fee.
- ☐ Credit any overpayment.
- ☐ Charge any additional filing fees required under 37 C.F.R. 1.16 and 1.17.
- ☐ Charge the issue fee set in 37 C.F.R. 1.18 at the mailing of the Notice of Allowance, pursuant to 37 C.F.R. 1.311(b).

Dated: December 15, 2000

Mark D. Wieczorek
Signature

Mark D. Wieczorek, Reg. No. 37,966
5038 Saratoga Avenue
San Diego, CA 92107

(619) 223-7210

cc:

US PATENT APPLICATION

EXPRESS MAIL LABEL NO.EK484857839US
ATTORNEY DOCKET NUMBER 00125/002001

METHOD AND APPARATUS FOR HEALTH AND DISEASE MANAGEMENT COMBINING PATIENT DATA MONITORING WITH WIRELESS INTERNET CONNECTIVITY

Roger J. Quy, Ph.D.
14 Topside Way
Mill Valley, CA 94941

I hereby certify that this correspondence is being deposited with the United States Postal Service as Express Mail No. EK484857839 in an envelope addressed to the Commissioner for Patents, Washington, D.C. 20231, on:

December 15, 2000
(Date of Deposit)

Mark D. Wieczorek
(Name of the Person Making the Deposit)

Mark D. Wieczorek
(Signature)

December 15, 2000
(Date of Signature)

Mark D. Wieczorek, Ph.D.
Reg. No. 37,966
5038 Saratoga Ave.
San Diego, CA 92107

PNA-FB0006896

TITLE OF THE INVENTION

Method and Apparatus for Health and Disease Management Combining Patient Data Monitoring with Wireless Internet Connectivity

CROSS-REFERENCE TO RELATED APPLICATIONS

This application is a conversion of U.S. Provisional Patent Application Serial No. 60/172,486 filed December 17, 1999, entitled "Method and Apparatus for Health and Disease Management Combining Patient Data Monitoring with Wireless Internet Connectivity".

REFERENCE TO GOVERNMENTAL SUPPORT

(none)

REFERENCE TO MICROFICHE APPENDIX

(none)

FIELD OF THE INVENTION

The present invention relates to monitoring of living subjects, and more particularly to health-monitoring of persons where measured or input health data is communicated by a wireless device to and from a software application running on an internet-connected server and where the same may be studied and processed by the software application, a health professional, or the subject.

PNA-FB0006897

BACKGROUND OF THE INVENTION

Several attempts have been made in the past to achieve efficient interactive communication of medical or health information between a subject or patient and a reviewer or provider of that information. In particular, communication of consumer physiological information has been a subject of such attempts. It is noted that in this regard the "reviewer or provider of medical or health information" is understood to include not only a physician but also a software application or algorithm that may analyze the information.

Medical or health information has been made available on a CD-ROM accessible by a home computer system. This passive approach had certain disadvantages. First, although the personal computer is prevalent is the United States, it is generally too expensive for a consumer physiological monitoring system and there are many people who find it too complicated to set up and use for that purpose. High-risk, chronically ill patients, responsible for more than half of health care costs in the United States and forming the fastest growing segment of those requiring health care, are indeed the most likely not to be able to afford or use a system built around a personal computer. In addition, such systems are limited in their interactivity to the information stored on the CD.

Previous patents by the Inventor addressed both of these disadvantages, as well as the need to reduce health care costs through providing educational health care information and interactive physiological monitoring in the home environment by means of a user-friendly, interactive system (see, e.g., U.S. Patent Nos. 5,601,435, 6,144,837, and continuations thereof).

SUBSTITUTE SHEET (RULE 26)

These previous patents were based on a video game console, or a multimedia player using a conventional television screen as the display device to achieve a system which is simpler to use than systems based on a personal computer. An initial embodiment of the previous patents utilized a compact disc to provide interactive information for disease management.

Even with the advantages provided, these systems limited the user to location in which the device was located. Even where devices are portable, as in the case of a laptop computer with a modem, an ordinary POTS phone line must be found and used. Where the user's computer employs a broadband connection, such as DSL or satellite, the choices of location are even more limited.

Attempts have been made to remedy this deficiency. For example, many telemetry systems allow a "wireless" distance to be placed between a health measuring unit and a remote monitoring system. However, such systems are limited in their range.

Other systems have used cellular telephone technology to increase the wireless health monitoring range. However, these systems have several deficiencies, such as requiring significant modification of the mobile phone. For example, U.S. Patent No. 5,772,586, issued June 30, 1998 to Heinonon et al., discloses a method for monitoring the health of a patient. This system uses a specialized connection between the patient health measuring unit and the cellular phone, however. The patient health measuring unit is located in the battery space of the mobile phone and is connected to a communication bus of the mobile phone. Other systems have been proposed, but these suffer from similar deficiencies in that they are not designed to be used with "off-the-

shelf" wireless devices or health measuring equipment.

The deployment of the above systems also currently lacks employment of full back-end server functionality with which to provide a wide range of interactive communication with the patient. Instead, such systems, if internet-enabled, are often limited to mere one-way non-interactive data transfer via a modem. While some systems are more enhanced, including that disclosed in U.S. Patent No. 5,357,427, issued October 18, 1994 to Langen, et al., and entitled "Remote Monitoring of High-Risk Patients using Artificial Intelligence", these systems are limited by the wired telecommunications infrastructure.

SUMMARY OF THE INVENTION

Embodiments of the present invention overcome one or more of the disadvantages of the prior art by providing a full-feature health-monitoring system that may wirelessly connect to a back-end server application via the internet. The invention allows wireless access to and from a wide variety of present medical or health-related instruments and devices, while maintaining the capability of connecting to future such devices.

In particular, the invention may be embodied in several systems. Two complementary such systems are described herein, although extensions to other such systems can be envisioned. First, an embodiment of the invention may be employed to manage the disease state or condition of a patient. In this embodiment, the patient may employ a health monitoring device ("HMD"), in particular a medical device, and a wireless connection provides data from the medical device for processing via the internet including a review by a physician or other health care professional if

required.

In the second embodiment, a health or lifestyle management plan may be implemented. Various health parameters, such as those relating to nutrition or exercise, may be entered into a health monitoring device, in this instance termed an "exercise machine", and the same may be wireless communicated to a server. An application may process and store the health parameters, and a health specialist may optionally review the same.

Wireless internet connectivity has many advantages. For example, in the first embodiment, a diabetic could connect a blood glucose meter to an internet-enabled wireless web device ("WWD") away from home and download data to a Diabetes Management Company's server and, in response, receive guidance displayed on the screen (or by voice) about choices for the next meal.

Alternatively, in the second embodiment, a person interested in tracking an exercise program may take the WWD to the local health club and attach the same to an exercise machine, send data output from various exercise machines over the Internet, and receive a personalized response from the server of a company specializing in Health & Lifestyle Management. The individual may input caloric content of foods eaten, and may further input caloric content of exercise performed. In this way, e.g., a person in a weight-loss program may see in great detail whether they are expending more calories in the form of exercise than the same individual is consuming in the form of food.

In general, in the health management embodiment, the system may be employed to monitor the physiologic status of a healthy subject while eating, exercising, or performing other activities. For clarity, such devices are termed

herein "exercise machines". These may include an electronic body weight scale, a body fat gauge, biofeedback devices, physiotherapy or chiropractic equipment, blood pressure recorders, or the like, or any type of exercise machine or monitor, including a heart rate monitor, treadmill, rowing machine, stepper, or the like.

In more detail, the present invention provides a method and system for assisting patients to manage a disease or maintain healthy lifestyle by collecting health-related data and providing information in response to those data by means of a WWD designed to display interactive information through a connection to the Internet. The present invention may be connected to various HMDs, both medical and exercise-related in nature, and may communicate information via a wireless connection such as a wireless Internet connection.

A major advantage of embodiments of the invention is that the same frees the patient from the constraints of wired systems. The same allows users with consumer "off-the-shelf" wireless devices to significantly extend the range of connectivity over that of wired computer, television, or even wireless telemetry systems.

In a first embodiment of the present invention, the WWD is a web-enabled cellular phone. Here it is noted that the term "web" or "internet" are used interchangeably to refer to the internet in general. In a second embodiment, the WWD is a palm, handheld, or laptop computer, or a PDA, equipped with a wireless modem. In a third embodiment, the WWD may be a hybrid device that combines the functions of a computer, PDA and telephone.

An adaptor is used if necessary to convert the output signal of the medical monitoring device to a suitable input

PNA-FB0006902

signal for the WWD. The adaptor allows connection of the WWD to a medical device, exercise machine or other variety of health care equipment, and the connection may be made via several techniques. As for wired techniques, a standard parallel bus or serial cable may be used if the input/output ports between the HMD and the WWD are appropriate. Otherwise, a suitable separate adaptor may be employed.

The connection may also be an input such as a disk drive or other media input for input of data, a USB port or phone jack or other such wired input, again employing an adaptor if required.

As for wireless techniques, infrared (IR), microwaves, radio frequency (RF), e.g., Bluetooth® or 802.11 protocols, optical techniques including lasers, and other such techniques may be used. The patient or subject may also input data manually, such as by a stylus, keypad, synchronization from a PC, or by various other techniques discussed below.

A major advantage of the invention is that by use of an optional adaptor, the system is compatible with current and prior HMDs as well as maintaining a capability of adapting to future such systems.

Other advantages of the invention may include one or more of the following. An embodiment of the invention may be used when a patient is traveling or otherwise away from their "wired" means of communication. The invention allows wireless health-monitoring to the level of accuracy previously achieved only by desktop so-called "wired" computer systems. The invention is protocol-independent.

The interaction between a WWD and a back-end server may provide a major additional advantage in certain

DOCKET A L A R M

embodiments of the invention. In particular, the relatively small amount of memory currently provided on a WWD as compared to a back-end server severely limits the functionality of applications running on the WWD, especially in terms of computing capacity, processing power, and user interface. By providing significant application functionality on the back-end, less memory and processing capabilities become necessary on the WWD (i.e., on the "front-end"). Thus, memory may be used in the WWD for an enhanced user interface or for other purposes, according to the user requirements.

In a method according to an embodiment of the invention, the patient connects to a specific Internet site and a software program, resident on a remote server located on the Internet, downloads an interactive user interface for that patient and an application for the measurement of the physiological data. The software may also be downloaded to the WWD from a personal computer via a synchronization operation in known fashion. The software provides a personalized display for the user and configures the WWD to control and monitor devices connected via a generic input/output port to the WWD. The software may be designed to suit the constraints of the small display screens of WWDs. The software, as well as inputs from the patient or other inputs, can control the manner, content, and display of information presented to the patient, and measured or input data can be stored for review by a health care provider or by a software algorithm or application. The algorithm may be of varying complexity, from a simple program that merely acknowledges receipt of information to an artificial intelligence algorithm, such as an expert system, collaborative filtering system, rules based system,

case-based reasoning system, or other such artificial intelligence application.

Further information may be provided to or from the patient, including information entered manually. The patient may input this information via a personal computer, which then may download the input information to the WWD via a synchronization operation using standard protocols, such as those for Palm PDA devices.

The user may also input supplemental information via a PC connected independently to the server via the internet. Such supplemental information may include data that is difficult or inconvenient to input on the WWD. In this way, the patient may be afforded a more convenient environment in which to manipulate data to supplement the data input to the WWD. The deployment of voice processing technology may be used to enable an even more convenient user interface: i.e., one to which patients can talk.

In all of these respects, the portable aspect of the WWD is important: to wit, the user may conveniently carry the WWD on their person wherever they may go, allowing data entry at the time needed.

Other aspects, features, and advantages will be apparent from the summary above, as well as from the description that follows, including the figures and the claims.

BRIEF DESCRIPTION OF THE DRAWINGS

FIG. 1 illustrates a general embodiment of a wireless health-monitoring system according to the present invention;

FIG. 2 illustrates an embodiment of a wireless health-monitoring apparatus according to the present invention,

showing the system of FIG. 1 up to a point of a wireless antenna;

FIG. 3 illustrates an embodiment of a back end of a health-monitoring system according to the present invention;

FIG. 4 illustrates a data flow diagram according to an embodiment of the present invention;

FIG. 5 illustrates an embodiment of a method of use for a wireless application and a server application according to the present invention, in which the same is implemented for disease and patient management;

FIG. 6 illustrates an embodiment of a method of use for a wireless application and a server application according to the present invention, in which the same is implemented for health management;

FIG. 7 illustrates an embodiment of a wired connection between a HMD and a WWD, also showing an optional adaptor; and

FIG. 8 illustrates an embodiment of a wireless connection between a HMD and a WWD, also showing an optional adaptor.

DETAILED DESCRIPTION OF THE PREFERRED EMBODIMENTS

Various acronyms are used for clarity herein. Definitions are given below.

The term "HMD" may encompass not only devices with physiologic sensors but also devices with a keypad, keyboard, mouse, pointer, pressure sensor, or other such inputs that the patient or user may employ to perform data entry of the desired parameters. In general, HMDs include some means for determining a health parameter.

In a disease management embodiment, an HMD may be a blood glucose monitor, a blood pressure monitor, an ambulatory ECG recorder, a respiratory monitor, a temperature or heart rate monitor, and so on.

In a healthy lifestyle management embodiment, an HMD may be an exercise machine, including treadmills, rowers, steppers, exercise cycles, or other aerobic or anaerobic exercisers, or a monitor, include monitors for temperature, heart rate, blood pressure, amount of work or rate of work performed, etc.

The term "subject" as used herein primarily indicates a human subject. The same may be a medical patient under physician care, a person interested in maintaining health via accurate recording of nutrition and exercise, and so on. The term "user" is generally used to refer to the user of the device, which may be synonymous with the subject or may alternatively be a caregiver of the subject, etc. The term "patient" is used, in addition to a person under the care of a physician, to also refer to a "normal" or healthy individual who is interested in maintaining a healthy physiologic balance.

The term "signal communication" is used to mean any type of connection between components where the connection is, e.g., electromagnetic, and where the connection allows information to be passed from one component to another. This term may be used in a similar fashion as "coupled", "connected", "information communication", "data communication", etc. The following are examples of signal communication schemes. As for wired techniques, a standard bus or serial cable may be used if the input/output ports are compatible and an optional adaptor may be employed if they are not. As for wireless techniques, IR, microwaves,

RF, e.g., Bluetooth® or 802.11 protocols, optical techniques including lasers, and other such techniques may be used. The patient or subject may even input data manually, such as by a stylus or keypad or by various other techniques discussed above and below.

The term "generic input/output port" is used to mean any type of convention, standard, universal, stock, consumer, or "off-the-shelf" type of port for data input and output. These may include both wired and wireless ports. A further description is given below.

Various embodiments of the invention are now described in more detail.

Referring to FIG. 1, a system of the present invention is shown for monitoring health data from a patient or subject 38. The system includes a wireless health-monitoring apparatus ("WHMA") 10 described in further detail below. WHMA 10 is linked in a wireless fashion to a wireless connection point of presence ("POP") 19, the same including at least a base station antenna 15 coupled to a server 17. Server 17 is in turn connected to the wired, or even a wireless (not shown) Internet 21, which may include the World Wide Web.

Referring to FIG. 2, an first embodiment of WHMA 10 is shown. WHMA 10 includes an HMD 11, which may include an optional monitor screen 40, coupled via an optional adaptor 42 to a WWD 12. WWD 12 connects wirelessly via an antenna 60 to base station 15 (see FIG. 1). One function of WWD 12 is to provide the user interface; other functions are described below.

As noted above, HMD 11 may include a physiologic sensor 24 or may include a manual system 36 for input of physiologic data via a connection 34. Manual system 36 may

EXHIBIT 1032

also be used to input data directly into WWD 12 via a connection 32. Manual system 36 may include, e.g., a keyboard 30, a mouse 26, a pen-type device 28, and may also employ a separate monitor (not shown). Of course, the user may also view information on monitor 40 or on a screen 41 of WWD 12. In many embodiments, the stylus-based system employed by many current PDA's, such as the Palm®, may be preferred for such manual data input.

Data may also be input via entry on a computer 37. This data may then be synchronized to WWD 12 in known fashion. Alternatively, computer 37, or another computer (see computer 37' in FIG. 4) may be used to connect to a server using the wired internet. This use may be particularly advantageous when entering a large amount of data, such as a patient's medical history. As noted above, in this way the patient may be afforded a more convenient environment in which to manipulate data to supplement the data input to the WWD.

It will be clear to one of skill in the art given this teaching that cable 32, as well as cables 34 and 44, may be replaced with wireless circuitry to communicate signals wirelessly.

For medical devices and applications, physiologic sensor 24 may include, e.g., a sensor appropriate for measuring blood glucose levels, blood pressure, heart rate, or any other desired parameter as required by the physician. Sensor 24 may connect via an optional cable 44 to subject 38. Alternatively, sensor 24 may be distal of HMD 11, i.e., at or within subject 38. In other words, if cable 44 is employed, sensor 24 may be proximal or distal of cable 44. If a wireless communications capability is added, sensor 24 need not physically connect with HMD 11 or

PNA-FB0006909

WWD 12 at all. That is, the same may measure a health parameter and may communicate the same to wireless health-monitoring apparatus 10 wirelessly. The short range wireless communications schemes which may be employed include infrared, radio frequency including Bluetooth or 802.11, or other such schemes.

As examples of sensor types, to measure blood glucose levels, sensor 24 may be a sensor that accepts a drop of blood, e.g., via a finger-prick. To measure heart rate, sensor 24 may be placed via an adhesive sensor disposed on the chest. Other health monitors may also be employed so long as the measured data may either be transferred to WWD 12, e.g., via optional adaptor 42, described in further detail below, or by being read by a user, e.g., from a display, and manually input to WWD 12. Alternatively, the measured data may be transferred to WWD 12 via wireless communication schemes, such as RF includes Bluetooth® or 802.11, infrared, optical, microwaves, etc., directly from sensor 24 or from HMD 11 as described in greater detail below.

The user, who may or may not be the same person as subject 38, may input data to WWD 12 from history or experience. For example, in a health or exercise device, if subject 38 consumes a known number of calories, this information may be entered via manual system 36 directly into WWD 12 or into HMD 11. Further, the user, the subject, and the sensor are not necessarily the sole sources of information. Data stored on the server, or on a separate server operated for health management may also be employed to result in a health benefit to subject 38.

Referring to FIG. 3, WHMA 10 is shown communicating wirelessly with the Internet. In doing so, WHMA 10

PNA-FB0006910

generally sends a wireless signal to a base station 14 (in known fashion) that is connected to a server 18 that is in signal communication (in known fashion) with the internet. Server 18 communicates via a protocol (in known fashion) to Internet 20, which also communicates via a protocol (in known fashion) to a server 22 running an application 62. Server 22 may be accessed (in known fashion) by a client computer 44 through a connection 64.

As noted, the protocols for data communication are known. However, they currently vary amongst known techniques. The present invention is not limited to any particular protocols, and may be implemented in any languages supported by the WWD and server. Of course, as computing capabilities continue to increase, it is expected that the capabilities of WHMA 10, servers 18 and 22, as well as application 62 and client 44, and other components, will correspondingly increase.

Application 62 running on server 22 may interact with WHMA 10 in a number of ways. Referring to FIG. 4, WHMA 10 is shown in signal communication with server 22 via a connection 72. Connection 72 schematically represents the wireless Internet connection and intervening pathways. WHMA 10 includes an application that may be viewed as having two components: a base wireless or device application 70 and an application presentation layer or user interface 68. User interface 68 is employed to, e.g., present a menu of options to the user, to allow the user to choose inputs, and to generally operate the device. User interface 68 may vary widely in sophistication, e.g., from a simple data entry field to a full graphical user interface. These applications may accept as inputs data from a sensor 24 as well as from a manual input 36.

PNA-FB0006911

Server 22 has a base server application 62 with which the same calculates or provides a response based at least in part on data from WHMA 10. Application 62 may include an algorithm 63 for analyzing data from the HMD, and either application 62 or algorithm 63 may optionally access data from an external data source 74 and may further consult an artificial intelligence system 76.

External data source 74 may be a memory or disk or other such storage that stores health data, such as healthy and unhealthy weight/height ranges, healthy and unhealthy cholesterol counts, the patient's or subject's prior medical or health history, healthy and unhealthy blood pressure values, information corresponding to the caloric and other nutritional content of foods, information corresponding to the caloric expenditure values of various exercises, algorithms for calculating various health parameters, etc. In general, any data that may benefit the health of a subject or patient may be stored in external data source 74. External data source 74 may also include online access of health information from external web sites, ftp servers, or other sources.

Due to the current relatively small amount of memory and storage available on current WWDs, such external application processing as by application 62 and external data storage as by external data 74 may be particularly important.

As noted, application 62 or algorithm 63 may also consult AI system 76 for suggestions as to health benefits. AI system 76 may even interact with external data source 74 to extract useful information from the same. AI system 76 may employ, e.g., case-based reasoning, rules-based

systems, collaborative filtering, neural networks, expert systems, or other such systems as are known.

It should also be noted that each of application 62, algorithm 63, external data source 74, or AI system 76, may physically reside on more than one server, e.g., on an array of servers for, e.g., storage or multiple processing purposes. Each of application 62, algorithm 63, external data source 74, or AI system 76, or combinations of each, may also respectively reside on different servers.

The extent to which server application 62 interacts with wireless application 70 depends on the use to which the system is put. For example, in a less interactive embodiment, device application 70 may act to measure a diabetic patient's blood glucose level and report the same to server application 62. In this case, a physician may simply review the measured value and send the patient an email reporting that the value is acceptable or not. In a highly interactive embodiment, a patient may have numerous HMDs 11 connected via optional adaptors to a WWD 12, and wireless application 70 may correspondingly send a large amount of health data to server application 62. The physician, accessing server application 62, may in turn send detailed care plans to a caregiver via connection 72. The received data may be analyzed using algorithm 63, external data source 74, and AI system 76. In this sense, the two applications may be highly interactive.

It is noted that an Application Service Provider (ASP) may operate application 62. That is, application 62 may be leased by an ASP to the health care provider, and the ASP may perform all necessary upgrades and maintenance to application 62 and its associated components.

To initialize the system, the program starts and a wireless application is loaded into the WWD. The loading of the wireless application may occur via synchronization from a desktop or via downloading from a server over the internet. The server application may be loaded into an appropriate internet-connected server. Subject data may be loaded into the WWD or into the server. In the latter case, the subject information may later be transferred to the WWD or transferred to the server from the WWD, as called for by the application. The initialization scheme then ends.

The wireless application may access the server and server application, or vice-versa, as determined by the respective program instructions. Examples are now given for (1) a system of disease and patient management and (2) a system for health management employing an exercise machine.

EXAMPLE EMPLOYING SYSTEM FOR DISEASE MANAGEMENT

Referring to FIG. 5, an example is given for a system of disease and patient management. In this figure, as well as in FIG. 6, boxes in dotted lines may generally be considered optional.

In FIG. 5, a medical device may determine health parameters and an optional physician review is provided. Health parameters may also be determined by user manual input.

The program is started (step 142) and a sensor measures a health parameter (step 116). The sensor may send the parameter to a medical device (step 118). The medical device then sends the parameter to the WWD (step 120). The WWD then wirelessly communicates the parameter to the

application server (step 122), e.g., via the wireless web. The application server processes the parameter (step 124), and calculates or provides a response (step 126) based at least in part on the parameter. The application server may optionally employ algorithm 63 (step 125), external data (step 132) or an AI system (step 134) in the calculation. The application server then sends the response to the WWD (step 128), where the response is displayed (step 130).

It should be noted that the term "response" here is used generally may simply be an acknowledgement that the parameter was received by the application server. The term "calculate" is also used generally, and may entail a simple calculation as well as a complex one. A result may, e.g., be the result of a calculation.

As noted above, the sensor may connect to any type of medical device or other such device in which information pertaining to a patient's disease or condition may be ascertained. The parameter may be any value corresponding to such information.

The method may also use a manual input as shown. In this case, after the start (step 142) of the application, the user may interact with the WWD (step 140). The interact may be a data input, a command to read data from a medical device, a response to a physician question or statement, an acknowledgement of physician notification, etc. Calculations by the application server may further take into account supplemental data sent by the user to the server, e.g., in a wired fashion directly over the internet (step 141).

FIG. 5 also shows a physician review and notification. In this option, the responses are displayed on a client computer (step 136) in signal communication with the

application server. A physician may then review the response on the client computer, and notify the patient of the responses (step 138). For example, the physician may notify the patient of positive or negative responses. Of course, it should be noted that the "client computer" may simply be a pager, PDA, WWD, or other such device, as well as a more typical desktop or laptop computer.

In one implementation, a diabetic may keep a database on a server of a dietary history and a blood glucose history. With this data at-hand wirelessly, the diabetic may choose whether to eat a particular food by entering nutritional information about the food into a WWD, transmitting the same wirelessly to the server, and receiving a recommendation from the server. The recommendation may be based on the food and also on data or information that had previously been transmitted wirelessly, including data from a blood glucose monitor, data input manually, if any, as well as data from algorithm 63, external data source 74, and AI system 76.

EXAMPLE EMPLOYING SYSTEM FOR HEALTH MANAGEMENT USING A GENERAL EXERCISE MACHINE

Referring to FIG. 6, an example is given for a system of health, nutrition, and/or exercise management. In this example, the HMD is an exercise machine as that termed has been defined above.

The program is started (step 242) and a sensor measures a health parameter (step 216), where the health parameter corresponds to health, fitness, nutrition, exercise, etc. The sensor may send the parameter to the exercise machine (step 218). It is understood here that the "sensor" may be, e.g., a blood pressure monitor, but

may also be a simple device connected to an aerobic exerciser that tracks miles ran, work performed, etc.

The exercise machine then sends the parameter to the WWD (step 220). The WWD wirelessly communicates the parameter to the application server (step 222), e.g., via the wireless web.

An alternative and complementary way of entering the parameter is by user input (step 248). For example, the user may enter the parameter into the exercise machine or into the WWD. This parameter may correspond to an amount of exercise performed, an amount of food consumed, etc.

Calculations by the application server may also take into account supplemental data sent by the user to the server, e.g., in a wired fashion directly over the internet (step 241).

The application server processes the parameter (step 224 and optionally step 225), and calculates a response (step 226) based at least in part on the parameter. The application server may optionally employ external data (step 232) or an AI system (step 234) in the calculation. The application server then sends the response to the WWD (step 228), where the response is displayed.

The same definitional statements regarding the terms "response", "calculate", "sensor", etc., as given before, apply in this embodiment as well.

As an optional step, a health specialist may notify the patient or subject of the response (step 238) after having the same displayed on their client computer (step 236). The health specialist may be replaced in this example by an application that may also include an algorithm.

ADAPTOR HARDWARE

A description is given below of a particular type of adaptor hardware. As noted above, the adaptor may optionally be used to connect a HMD to a WWD.

In general, a connection is necessary between a HMD 11 and a WWD. The nature of this connection may vary. For example, the connection may be wired or wireless. For wired systems, the connection may be direct or an adaptor may be employed, either on one or both ends of the direct wired connection, to adapt the signal appropriately. In the same way, for wireless systems, the connection may be direct, if both HMD and WWD employ the same wireless protocol, or an adaptor may be involved to modify the signal of one or both devices. These connections, all of which are encompassed by the present invention, are discussed in more detail below.

Referring to FIG. 7, an embodiment of the connection is shown. In this figure, a hardware (or "wired") connection is shown, i.e., an adaptor 168, disposed between a HMD 160 and a WWD 162. In most circumstances, it is assumed that the varieties of HMDs will vary more widely than the varieties of WWDs. Accordingly, HMD 160 will likely have one of a variety of types of connectors for input/output purposes, here shown as a connector 164. Connector 164 mates with a connector 172 of adaptor 168. At another point on adaptor 168 is a connector 172' for connecting to a generic input/output port 164' on WWD 162. A cable 170 is disposed between the two connectors, cable 170 capable of including adaptor circuitry if desired.

Of course, the use and structure of adaptor 168, between HMD 160 and WWD 162, depends on factors such as the prevalence of an industry standard for such communications.

PNA-FB0006918

In other words, if the output of HMD 160 is readily acceptable to WWD 162, then the same may be directly connected or may be connected via a simple cable, the same basically extending from pin-to-pin. For example, a standard parallel bus or serial cable may be used if the input/output ports between the HMD and the WWD, which may be, e.g., RS232, are compatible. Otherwise, a suitable adaptor circuit as noted above may be employed. The connection may also be an input such as a disk drive or other media input for input of data, a USB port or phone jack or other such wired input, again employing an adaptor circuit if required.

It is noted as exemplary that several of the most prevalent PDA's currently employs the Palm® operating system. The same may be connected to the Internet in a wireless fashion using one of several available networks. In one version of a Palm® device, a 10-pin RS-232 serial port is provided. In this version of the Palm®, port 164' can be used to communicate with HMD 160 and connector 164 via the optional adaptor 168 according to the following pin-out:

Pin	Name	Function
1	DTR	Data Terminal Ready signal
2	VCC	3.3 Volts
3	RD (in)	Receive data
4	RTS (out)	Request to send
5	TD (out)	Transmit data
6	CTS (in)	Clear to send
7	GP1 (in)	Interrupt line
8	GP2 (in)	modem sync
9	unused	unused
10	GND	signal ground

On the other side of optional adaptor 168, i.e., HMD 160, connector 164 may vary more widely. It is noted that certain exercise machines are equipped with DB9 or DB25 RS232 serial connectors. In this case, the pin-outs are (for a DB25):

Pin	Name	Function
1	-	Protective/shielded ground
2	TD	Transmit Data (a.k.a TxD, Tx)
3	RD	Receive Data (a.k.a RxD, Rx)
4	RTS	Request To Send
5	CTS	Clear To Send
6	DSR	Data Set Ready
7	SGND	Signal Ground
8	CD	Carrier Detect (a.k.a DCD)
9		Reserved for data set testing
10		Reserved for data set testing
11		Unassigned
12	SDCD	Secondary Carrier Detect
13	SCTS	Secondary Clear to send
14	STD	Secondary Transmit Data
15	DB	Transmit Clock (a.k.a TCLK, TxCLK)
16	SRD	Secondary Receive Data
17	DD	Receive Clock (a.k.a. RCLK)
18	LL	Local Loopback
19	SRTS	Secondary Request to Send
20	DTR	Data Terminal Ready
21	RL/SQ	Signal Quality Detector/Remote loopback
22	RI	Ring Indicator (DCE raises when incoming call detected used for auto answer applications)
23	CH/CI	Signal Rate selector
24	DA	Auxiliary Clock (a.k.a. ACLK)
25		Unassigned

PNA-FB0006920

A connection may simply be made by providing optional adaptor 168 with adaptor circuitry, such as within cable 170 or within a circuit box therein, so as to match up the appropriate or complementary pins.

In other embodiments, such as for devices connected to proprietary connectors, a less standard and perhaps proprietary pin-out may be required.

Referring to FIG. 8, an embodiment of a wireless implementation of the WHMA 10 is shown. In FIG. 8, a wireless connection is shown between HMD 160 and WWD 162. HMD 160 may have an integral wireless modulator/demodulator disposed within (not shown). More likely, however, is that HMD 160 has an adaptor 154 connectable thereto which performs these functions. Adaptor 154 may plug into a connector 165 on HMD 160. WWD 162 may have an integral wireless modulator/demodulator (not shown), although an adaptor can also be used in this context. If an adaptor is used, the same may plug into generic input/output port 164'.

While the device shown in FIG. 8 is described in the context of general wireless communications, various protocols may be employed. For radio frequency communications, protocols such as Bluetooth® or 802.11 may be advantageously employed. Other techniques employing a similar configuration include those employing IR, microwaves, optical techniques including lasers, and so on.

It should be understood that the above is merely exemplary, and that the form of the adaptor may vary widely between HMDs and WWDs.

It will be understood that the above description of a "Method and Apparatus for Health and Disease Management Combining Patient Data Monitoring with Wireless Internet

Connectivity" has been with respect to particular embodiments of the invention. While this description is fully capable of attaining the objects of the invention, it is understood that the same is merely representative of the broad scope of the invention envisioned, and that numerous variations of the above embodiments may be known or may become known or are obvious or may become obvious to one of ordinary skill in the art, and these variations are fully within the broad scope of the invention. For example, while certain wireless technologies have been described herein, other such wireless technologies may also be employed. Furthermore, while various types of medical devices have been mentioned, numerous other types may also be used in the embodiments of the invention, including pulse oximeters, syringe drivers, infusion pumps, spirometers, ventilators, anesthesia monitors, and so on. Accordingly, the scope of the invention is to be limited only by the claims appended hereto, and equivalents thereof. In these claims, a reference to an element in the singular is not intended to mean "one and only one" unless explicitly stated. Rather, the same is intended to mean "one or more". All structural and functional equivalents to the elements of the above-described preferred embodiment that are known or later come to be known to those of ordinary skill in the art are expressly incorporated herein by reference and are intended to be encompassed by the present claims. Moreover, it is not necessary for a device or method to address each and every problem sought to be solved by the present invention, for it to be encompassed by the present claims. Furthermore, no element, component, or method step in the present invention is intended to be dedicated to the public regardless of whether the element,

component, or method step is explicitly recited in the claims. No claim element herein is to be construed under the provisions of 35 U.S.C. §§112, ¶6, unless the element is expressly recited using the phrase "means for".

What Is Claimed Is:

CLAIMS

44 1. A wireless health-monitoring system for monitoring a disease state or condition of a patient, comprising:

An internet-enabled wireless web device, the internet-enabled wireless web device including a first communications port having a generic input/output port and a second communications port having a circuit for wireless communications with a network, the internet-enabled wireless web device configured to store:

a health parameter, the health parameter corresponding to a disease state or condition of a patient and determined by a health parameter determining means:

A device application; and

a user interface; and

A server application, residing on a computer readable medium and disposed on a server in communication with the wireless network, for causing the server to:

Receive the determined health parameter;

Calculate a response based in part on the determined health parameter; and

Provide the response to the internet-enabled wireless web device.

54 2. The system of claim 44, wherein the generic input/output port includes a port for wireless communications.

PNA-FB0006924

56 54. The system of claim 54, wherein a wireless communications scheme employed by the generic input/output port uses radio frequency.

57 56. The system of claim 56, wherein the wireless communications scheme employed uses the Bluetooth protocol.

58 54. The system of claim 54, wherein the wireless communications scheme employed uses the 802.11 protocol.

55 54. The system of claim 54, wherein the wireless communications scheme employed uses infrared.

45 44. The system of claim 44, wherein the generic input/output port includes a port for serial communications.

44 44. The system of claim 44, wherein the generic input/output port includes a port for parallel communications.

50 44. The system of claim 44, wherein the internet-enabled wireless web device is selected from the group consisting of: an internet-enabled cellular phone; a handheld, palm, or laptop computer having an optional implemented or integral wireless capability; and a hybrid device of a handheld computer and cellular telephone.

51 50. The system of claim 50, wherein the internet-enabled wireless web device is a personal digital assistant with a wireless capability.

59 ~~11~~. The system of claim 44 ~~1~~, further comprising a medical device, the medical device including the health parameter determining means, the medical device further comprising an output port to deliver data corresponding to the health parameter.

68 ~~12~~. The system of claim 59 ~~11~~, further comprising an adaptor for connection to the output port of the medical device, the adaptor having an output to deliver data corresponding to the health parameter.

69 ~~13~~. The system of claim 68 ~~12~~, wherein the adaptor output and the generic input/output port communicate via a wired link.

71 ~~14~~. The system of claim 68 ~~12~~, wherein the adaptor output and the generic input/output port communicate via a wireless link.

73 ~~15~~. The system of claim 71 ~~14~~, wherein a wireless communications scheme employed by the generic input/output port and the adaptor output uses radio frequency.

74 ~~16~~. The system of claim 73 ~~15~~, wherein the wireless communications scheme employed uses the Bluetooth protocol or the 802.11 protocol.

72 ~~17~~. The system of claim 71 ~~14~~, wherein a wireless communications scheme employed by the generic input/output port and the adaptor output uses infrared.

60 59
~~18~~. The system of claim ~~11~~, wherein the output port of the medical device and the generic input/output port communicate via a wired link.

64 59
~~19~~. The system of claim ~~11~~, wherein the output port of the medical device and the generic input/output port communicate via a wireless link.

66 64
~~20~~. The system of claim ~~19~~, wherein a wireless communications scheme employed by the generic input/output port and the output of the medical device uses radio frequency.

67 66
~~21~~. The system of claim ~~20~~, wherein the wireless communications scheme employed uses the Bluetooth protocol or the 802.11 protocol.

65 64
~~22~~. The system of claim ~~19~~, wherein a wireless communications scheme employed by the generic input/output port and the output of the medical device uses infrared.

61 59
~~23~~. The system of claim ~~11~~, wherein the medical device output is in signal communication with the generic input/output port of the internet-enabled wireless web device via a medium selected from the group consisting of: a storage device including a disk or tape, a USB connection, a phone connection, microwaves, optical techniques including lasers, manual input by a stylus, keypad, synchronization from a PC, and combinations thereof.

PNA-FB0006927

76 ~~24~~. The system of claim ~~12~~ 68, wherein the adaptor output is in signal communication with the generic input/output port of the internet-enabled wireless web device via a medium selected from the group consisting of: a storage device including a disk or tape, a USB connection, a phone connection, microwaves, optical techniques including lasers, manual input by a stylus, keypad, synchronization from a PC, and combinations thereof.

41 ~~25~~. The system of claim ~~1~~ 44, wherein the server application is provided and administered by an Application Service Provider.

52 ~~26~~. The system of claim ~~1~~ 44, wherein the server application is an application employing a plurality of nodes, and wherein the device application acts as a node of the server application.

63 ~~27~~. The system of claim ~~26~~ 52, wherein the node is a node of a system selected from the group consisting of: an algorithm, an artificial intelligence system, an expert system, a rules-based system, a case-based reasoning system, and combinations thereof.

62 ~~28~~. The system of claim ~~11~~ 59, further comprising a sensor for measuring the health parameter, the sensor having an output coupled to the medical device.

PNA-FB0006928

63 62
~~29~~. The system of claim ~~28~~, wherein the sensor is for measuring a health parameter selected from the group consisting of: body weight, blood glucose level, heart rate, blood pressure, temperature, metabolic rate, respiratory rate, cholesterol, and combinations thereof.

64 44
~~30~~. The system of claim ~~1~~, further comprising a manual system for input of the health parameter, the manual system in signal communication with the internet-enabled wireless web device.

49 44
~~31~~. The system of claim ~~1~~, further comprising a computer for input of supplemental health data, the computer in signal communication with the internet-enabled wireless web device or the server.

18
~~32~~. A wireless health-monitoring system for monitoring a disease state or condition of a patient, comprising:

An internet-enabled wireless web device, the internet-enabled wireless web device including a first communications port having a generic wireless input/output port and a second communications port having a circuit for wireless communications with a network, the internet-enabled wireless web device configured to store:

a health parameter, the health parameter corresponding to a disease state or condition of a patient and determined by a health parameter determining means:

an application; and

a user interface; and

A server application, residing on a computer readable medium and disposed on a server in communication with the wireless network, for causing the server to:

Receive the determined health parameter;

Calculate a response based in part on the determined health parameter; and

Provide the response to the internet-enabled wireless web device.

20 ~~33~~. The system of claim 18 ~~32~~, wherein a communications scheme employed by the generic wireless input/output port uses radio frequency.

21 ~~34~~. The system of claim 20 ~~33~~, wherein the wireless communications scheme employed uses the Bluetooth protocol or the 802.11 protocol.

19 ~~35~~. The system of claim 18 ~~32~~, wherein the wireless communications scheme employed uses infrared.

22 ~~36~~. A method of wirelessly monitoring the disease state or condition of a patient, comprising:

Providing a user interface and application to an internet-enabled wireless web device;

Entering a health parameter to the internet-enabled wireless web device via a generic input/output port, the health parameter corresponding to a disease state or condition of a patient;

Wirelessly transmitting the health parameter to a server;

Receiving the determined health parameter at the server;

Calculating a response based on the determined health parameter; and

Delivering the response to the internet-enabled wireless web device.

23 ~~37~~. The method of claim 22 ~~36~~, wherein the entering also includes entering a health parameter manually.

25 ~~38~~. The method of claim 22 ~~36~~, wherein the generic input/output port is in signal communication with a medical device.

26 ~~39~~. The method of claim 25 ~~38~~, wherein the generic input/output port is in signal communication with the medical device via a wired connection.

29 ~~40~~. The method of claim ~~38~~ 25, wherein the generic input/output port is in signal communication with the medical device via a wireless connection.

31 ~~41~~. The method of claim 29 ~~40~~, further comprising transferring information between the medical device and the generic input/output port using a radio frequency transmission scheme.

32 ~~42~~. The method of claim 31 ~~41~~, wherein the radio frequency transmission scheme is selected from the Bluetooth protocol or the 802.11 protocol.

30 ~~43~~. The method of claim 29 ~~40~~, further comprising transferring information between the medical device and the generic input/output port using an infrared

transmissions scheme.

27 ~~41~~. The method of claim 25 ~~38~~, wherein the medical device is selected from the group consisting of: blood glucose monitors, body weight scales, blood pressure monitors, heart rate monitors, respiratory monitors, temperature monitors, ECG monitors, and combinations thereof.

28 ~~42~~. The method of claim 25 ~~38~~, further comprising transferring information between the medical device and the generic input/output port using an adaptor.

24 ~~43~~. The method of claim 32 ~~39~~, further comprising entering supplemental health data into the server using a computer.

5 ~~47~~. A computer program, residing on a computer-readable medium, containing instructions for causing a server in signal communication with the internet to:

Provide a device application and user interface to an internet-enabled wireless web device, wherein the user interface or device application contains instructions for causing the internet-enabled wireless web device to receive data from a generic input/output port;

Receive a signal corresponding to a health parameter from the internet-enabled wireless web device, the health parameter corresponding to a disease state or condition of a patient;

Calculate a response based at least in part on the received signal;

Communicate the response to the internet-enabled wireless web device; and

PNA-FB0006932

Display features according to the response.

6 5
~~48~~. The computer program of claim ~~47~~, wherein the user interface or device application contains instructions for causing the internet-enabled wireless web device to receive data from the generic input/output port wherein the generic input/output port is in signal communication with a medical device that is selected from the group consisting of: blood glucose monitors, blood pressure monitors, body weight scales, heart rate monitors, respiratory monitors, temperature monitors, ECG monitors, and combinations thereof.

15
~~49~~. A wireless health-monitoring system for health management of a patient or subject, comprising:

An internet-enabled wireless web device, the internet-enabled wireless web device including a first communications port having a generic input/output port for connection to an exercise machine and a second communications port having a circuit for wireless communications with a network, the internet-enabled wireless web device configured to store:

a health parameter, the health parameter corresponding to a health, exercise, nutrition or fitness state or condition of the patient and determined by a health parameter determining means:

A device application; and

a user interface; and

A server application, residing on a computer readable medium and disposed on a server in communication with the wireless network, for causing the server to:

Receive the determined health parameter;
Calculate a response based in part on the determined health parameter; and
Provide the response to the internet-enabled wireless web device.

87 50. The system of claim 75 ~~49~~, wherein the generic input/output port includes a port for wireless communications.

89 51. The system of claim 87 ~~50~~, wherein a wireless communications scheme employed by the generic input/output port uses radio frequency.

90 52. The system of claim 89 ~~51~~, wherein the wireless communications scheme employed uses the Bluetooth protocol.

91 53. The system of claim 89 ~~51~~, wherein the wireless communications scheme employed uses the 802.11 protocol.

88 54. The system of claim 87 ~~50~~, wherein the wireless communications scheme employed uses infrared.

74 55. The system of claim 75 ~~49~~, wherein the generic input/output port includes a port for serial communications.

77 56. The system of claim 75 ~~49~~, wherein the generic input/output port includes a port for parallel communications.

81 57. The system of claim 75 ~~49~~, wherein the internet-enabled wireless web device is selected from the group

PNA-FB0006934

consisting of: an internet-enabled cellular phone; a handheld, palm, or laptop computer having an optional implemented or integral wireless capability; and a hybrid device of a handheld computer and cellular telephone.

82 ~~58~~. The system of claim 81 ~~57~~, wherein the internet-enabled wireless web device is a personal digital assistant with a wireless capability.

92 ~~59~~. The system of claim 75 ~~48~~, wherein the exercise machine includes the health parameter determining means, the exercise machine further comprising an output port to deliver data corresponding to the health parameter.

99 ~~60~~. The system of claim 92 ~~59~~, further comprising an adaptor for connection to the output port of the exercise machine, the adaptor having an output to deliver data corresponding to the health parameter.

100 ~~61~~. The system of claim 99 ~~60~~, wherein the adaptor output and the generic input/output port communicate via a wired communications scheme.

102 ~~62~~. The system of claim 99 ~~60~~, wherein the adaptor output and the generic input/output port communicate via a wireless communications scheme.

104 ~~63~~. The system of claim 102 ~~62~~, wherein the wireless communications scheme employed by the generic input/output port and the adaptor output uses radio

PNA-FB0006935

frequency.

105 64. The system of claim ~~63~~ 104, wherein the wireless communications scheme employed uses the Bluetooth protocol or the 802.11 protocol.

103 65. The system of claim ~~62~~ 102, wherein the wireless communications scheme employed by the generic input/output port and the adaptor output uses infrared.

93 66. The system of claim ~~59~~ 92, wherein the output port of the exercise machine and the generic input/output port communicate via a wired communications scheme.

95 67. The system of claim ~~59~~ 92, wherein the output port of the exercise machine and the generic input/output port communicate via a wireless communications scheme.

97 68. The system of claim ~~67~~ 95, wherein a wireless communications scheme employed by the generic input/output port and the output of the exercise machine uses radio frequency.

98 69. The system of claim ~~68~~ 97, wherein the wireless communications scheme employed uses the Bluetooth protocol or the 802.11 protocol.

96 70. The system of claim ~~67~~ 95, wherein a wireless communications scheme employed by the generic input/output port and the output of the exercise machine uses infrared.

PNA-FB0006936

94 91 ~~71~~. The system of claim ~~59~~, wherein the exercise machine output port is in signal communication with the generic input/output port of the internet-enabled wireless web device via a medium selected from the group consisting of: a storage device including a disk or tape, a USB connection, a phone connection, microwaves, optical techniques including lasers, manual input by a stylus, keypad, synchronization from a PC, and combinations thereof.

101 99 ~~72~~. The system of claim ~~60~~, wherein the adaptor output is in signal communication with the generic input/output port of the internet-enabled wireless web device via a medium selected from the group consisting of: a storage device including a disk or tape, a USB connection, a phone connection, microwaves, optical techniques including lasers, manual input by a stylus, keypad, synchronization from a PC, and combinations thereof.

78 75 ~~73~~. The system of claim ~~49~~, wherein the server application is provided and administered by an Application Service Provider.

83 75 ~~74~~. The system of claim ~~49~~, wherein the server application is an application employing a plurality of nodes, and wherein the device application acts as a node of the server application.

PNA-FB0006937

84 ~~75.~~ The system of claim 83 ~~74~~, wherein the node is a node of a system selected from the group consisting of: an algorithm, an artificial intelligence system, an expert system, a rules-based system, a case-based reasoning system, and combinations thereof.

85 ~~76.~~ The system of claim 75 ~~49~~, further comprising a sensor for measuring the health parameter, the sensor having an output coupled to the exercise machine.

86 ~~77.~~ The system of claim 85 ~~76~~, wherein the sensor is for measuring a health parameter selected from the group consisting of: body weight, heart rate, blood pressure, temperature, metabolic rate, amount of work performed, rate of work performed, cholesterol, and combinations thereof.

79 ~~78.~~ The system of claim 75 ~~49~~, further comprising a manual system for input of the health parameter, the manual system in signal communication with the internet-enabled wireless web device.

80 ~~79.~~ The system of claim 75 ~~49~~, further comprising a computer for input of supplemental health data, the computer in signal communication with the internet-enabled wireless web device or the server.

14 ~~80.~~ A wireless health-monitoring system for health management of a patient or subject, comprising:

An internet-enabled wireless web device, the internet-enabled wireless web device including a first communications port having a generic

PNA-FB0006938

wireless input/output port and a second communications port having a circuit for wireless communications with a network, the internet-enabled wireless web device configured to store:

a health parameter, the health parameter corresponding to a fitness, nutrition, health, or exercise state or condition of a patient and determined by a health parameter determining means:

an application; and

a user interface; and

A server application, residing on a computer readable medium and disposed on a server in communication with the wireless network, for causing the server to:

Receive the determined health parameter;

Calculate a response based in part on the determined health parameter; and

Provide the response to the internet-enabled wireless web device.

16 81. The system of claim 14 80, wherein a communications scheme employed by the generic wireless input/output port uses radio frequency.

17 82. The system of claim 14/16 81, wherein the wireless communications scheme employed uses the Bluetooth protocol or the 802.11 protocol.

15 83. The system of claim 14 80, wherein the wireless communications scheme employed by the generic wireless input/output port uses infrared.

33 84. A method of wirelessly monitoring the health state or condition of a patient or subject, comprising:

PNA-FB0006939

Providing a user interface and application to an internet-enabled wireless web device;

Entering a health parameter from an exercise machine to the internet-enabled wireless web device via a generic input/output port, the health parameter corresponding to a health, nutrition, fitness or exercise state or condition of a patient;

Wirelessly transmitting the health parameter to a server;

Receiving the determined health parameter at the server;

Calculating a response based on the determined health parameter; and

Delivering the response to the internet-enabled wireless web device.

34
85. The method of claim ~~84~~ 33, wherein the entering also includes entering a health parameter manually.

38
86. The method of claim ~~84~~ 33, wherein the generic input/output port is in signal communication with the exercise machine.

39
87. The method of claim ~~86~~ 38, wherein the generic input/output port is in signal communication with the exercise machine via a wired connection.

40
88. The method of claim ~~86~~ 38, wherein the generic input/output port is in signal communication with the exercise machine via a wireless connection.

PNA-FB0006940

42 ~~89~~. The method of claim 40 ~~86~~, further comprising transferring information between the exercise machine and the generic input/output port using a radio frequency transmission scheme.

43 ~~90~~. The method of claim 42 ~~89~~, wherein the radio frequency transmissions scheme is selected from the Bluetooth protocol or the 802.11 protocol.

41 ~~91~~. The method of claim 40 ~~88~~, further comprising transferring information between the exercise machine and the generic input/output port using an infrared transmission scheme.

35 ~~92~~. The method of claim 33 ~~84~~, wherein the exercise machine is selected from the group consisting of: treadmills, rowers, steppers, exercise cycles, other aerobic exercisers, body weight scales, blood pressure monitors, heart rate monitors, temperature monitors, and combinations thereof.

36 ~~93~~. The method of claim 33 ~~84~~, further comprising transferring information between the exercise machine and the generic input/output port using an adaptor.

37 ~~94~~. The method of claim 33 ~~84~~, further comprising entering supplemental health data into the server using a computer.

3 ~~95~~. A computer program, residing on a computer-readable

PNA-FB0006941

medium, containing instructions for causing a server in signal communication with the internet to:

Provide a device application and user interface to an internet-enabled wireless web device, wherein the user interface or device application contains instructions for causing the internet-enabled wireless web device to receive data from a generic input/output port;

Receive a signal corresponding to a health parameter from the internet-enabled wireless web device, the health parameter corresponding to a health, fitness, nutrition or exercise state or condition of a patient;

Calculate a response based at least in part on the received signal;

Communicate the response to the internet-enabled wireless web device; and

Display features according to the response.

96. The computer program of claim 95, wherein the user interface or device application contains instructions for causing the internet-enabled wireless web device to receive data from the generic input/output port wherein the generic input/output port is in signal communication with a exercise machine that is selected from the group consisting of: treadmills, exercise cycles, steppers, rowers other aerobic exercisers, blood pressure monitors, body weight scales, heart rate monitors, temperature monitors, and combinations thereof.

97. A internet-enabled wireless web device for monitoring health, the internet-enabled wireless web device connected in wireless communication with a server running an application, comprising:

A web-enabled cellular phone running an application, the application functioning to accept inputs from a first communications port and a second communications port, the first communications port including a generic input/output port and the second communications port including a wireless link to a network, the generic input/output port for receipt of a health parameter, the health parameter corresponding to a patient's disease state or condition, or to a patient's health, nutrition, fitness or exercise state or condition.

98. A internet-enabled wireless web device for monitoring health, the internet-enabled wireless web device connected in wireless communication with a server running an application, comprising:

A personal digital assistant with wireless connectivity running an application, the application functioning to accept inputs from a first communications port and a second communications port, the first communications port including a generic input/output port and the second communications port including a wireless link to a network, the generic input/output port for receipt of a health parameter, the health parameter corresponding to a patient's disease state or condition, or to a patient's health, nutrition, fitness or exercise state or condition.

PNA-FB0006943

2

~~99~~. A internet-enabled wireless web device for monitoring health, the internet-enabled wireless web device connected in wireless communication with a server running an application, comprising:

A hybrid handheld computer and cellular telephone combination running an application, the application functioning to accept inputs from a first communications port and a second communications port, the first communications port including a generic input/output port and the second communications port including a wireless link to a network, the generic input/output port for receipt of a health parameter, the health parameter corresponding to a patient's disease state or condition, or to a patient's health, nutrition, fitness or exercise state or condition.

4 7

~~100~~. The system of claim ~~98~~, wherein the generic input/output port employs a wireless communications scheme, and wherein the wireless communications scheme employed uses radio frequency.

9 7

~~101~~. The system of claim ~~98~~, wherein the generic input/output port employs a wireless communications scheme, and wherein the wireless communications scheme employed uses the Bluetooth protocol.

10 7

~~102~~. The system of claim ~~98~~, wherein the generic input/output port employs a wireless communications scheme, and wherein the wireless communications scheme employed uses the 802.11 protocol.

Confidential - Subject to Protective Order

11 7
~~103~~. The system of claim ~~98~~, wherein the generic input/output port employs a wireless communications scheme, and wherein the wireless communications scheme employed uses infrared.

12 7
~~104~~. The system of claim ~~98~~, wherein the generic input/output port includes a port for serial communications.

13 7
~~105~~. The system of claim ~~98~~, wherein the generic input/output port includes a port for parallel communications.

DEFENDANT'S EXHIBIT

ABSTRACT

Embodiments of the invention provide a method and apparatus for a wireless health monitoring system for interactively monitoring a disease or health condition of a patient by connecting an internet-enabled wireless web device ("WWD") to a health monitoring device which may be a medical device or other health related device such as an exercise machine. The WWD may be connected to the health monitoring device directly by a wired connection to a generic input/output port of the WWD using an optional adaptor if necessary. Alternatively, the WWD may be wirelessly connected to the health monitoring device, such as via an infrared or radio frequency connection, including using protocols such as Bluetooth or 802.11. The wireless connection may also employ an adaptor if necessary. The user may also input data to the WWD manually, such as by a keypad, keyboard, stylus, or optionally by voice command.

The health related data is transmitted from the WWD to a server using standard internet protocols. The server calculates a response using a software program which may include an algorithm or artificial intelligence system, and may further provide for review by a physician or health specialist. The user may interact with the server. For example, the server transmits a response to the WWD, and the user may answer the response or provide other information.

PNA-FB0006946

6602191

09738270

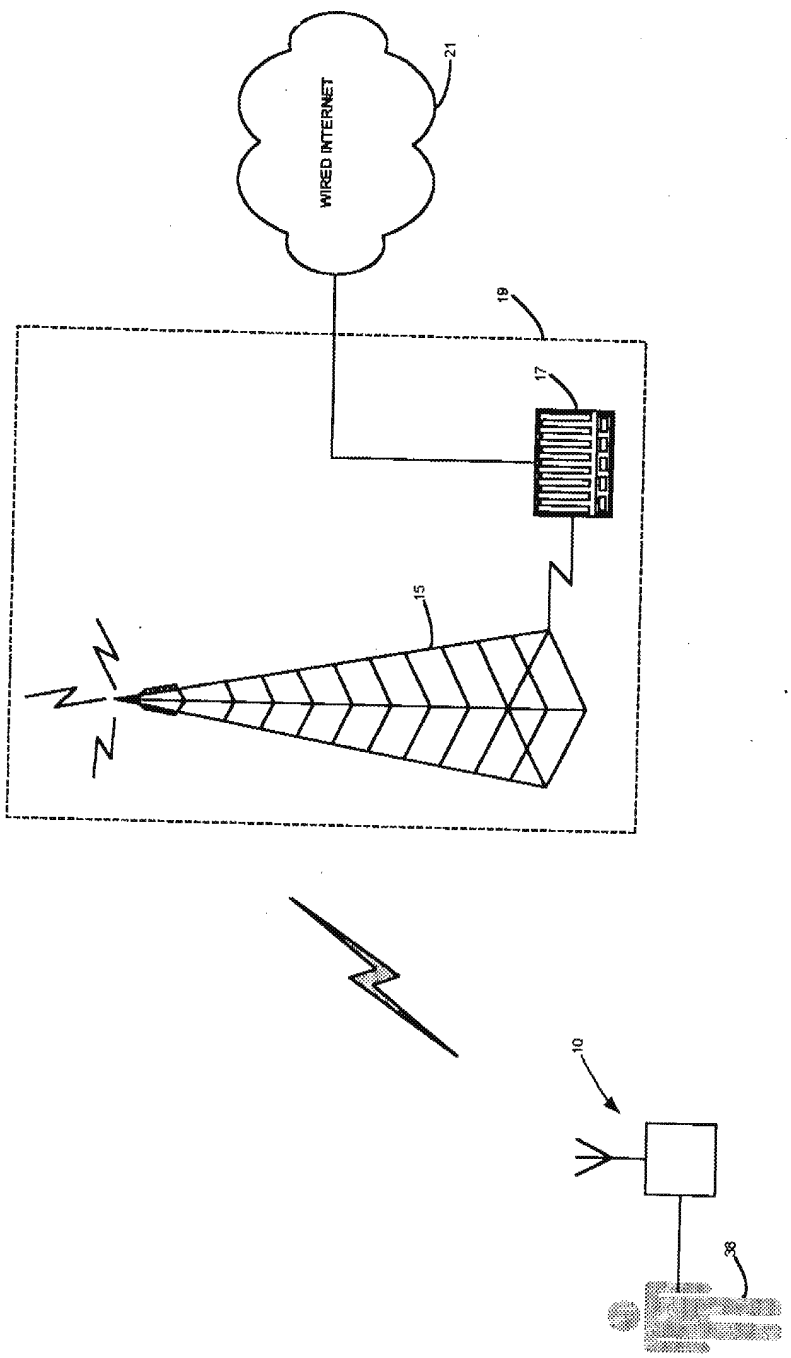

FIG. 1

8 Shots/Clip

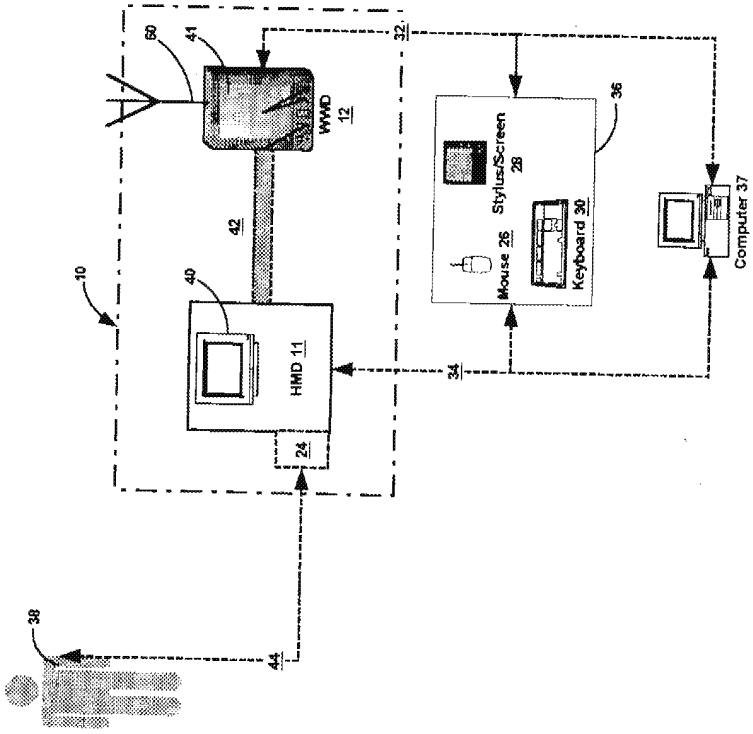
60
41
32
WHD
12
36
Stylus/Screen
28
42
Mouse 26
Keyboard 30
Computer 37
10
40
HMD 11
34
24
38
44

FIG. 2

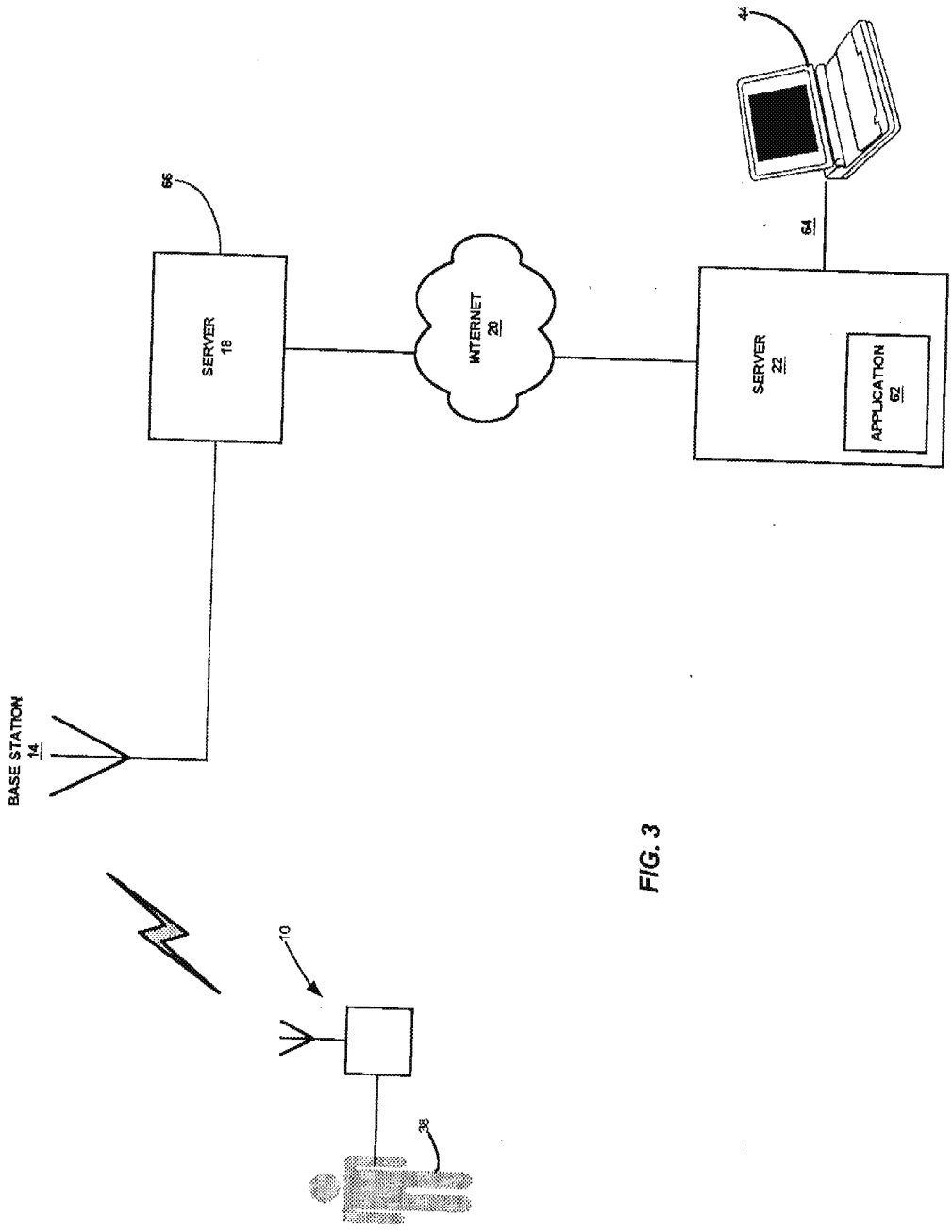
BASE STATION
14
SERVER
18
66
INTERNET
20
SERVER
22
APPLICATION
62
64
44
10
38

FIG. 3

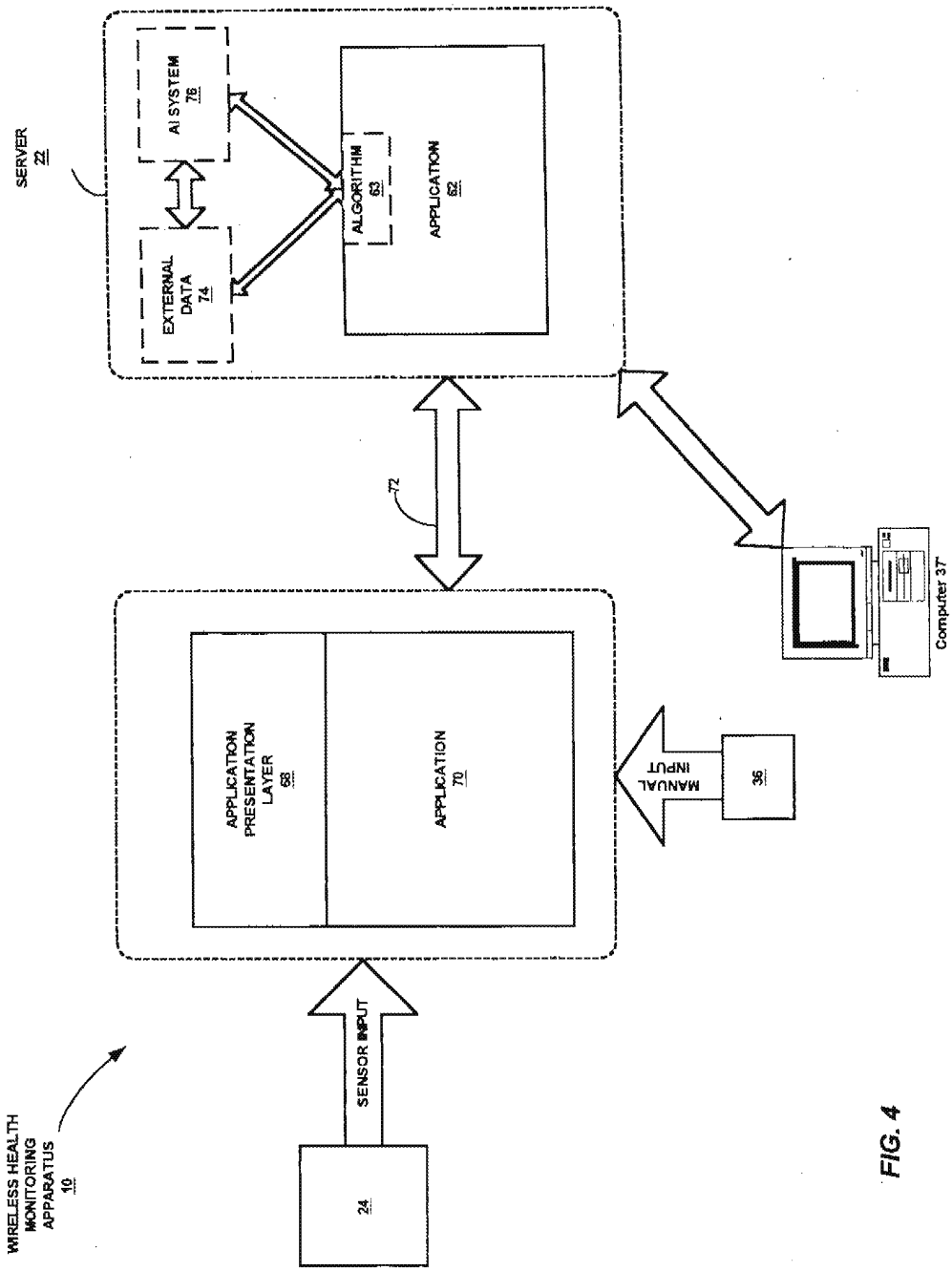
SERVER
22
AI SYSTEM
76
EXTERNAL DATA
74
ALGORITHM
63
APPLICATION
62
72
Computer 37'
APPLICATION PRESENTATION LAYER
68
APPLICATION
70
MANUAL INPUT
36
SENSOR INPUT
24
WIRELESS HEALTH MONITORING APPARATUS
10

FIG. 4

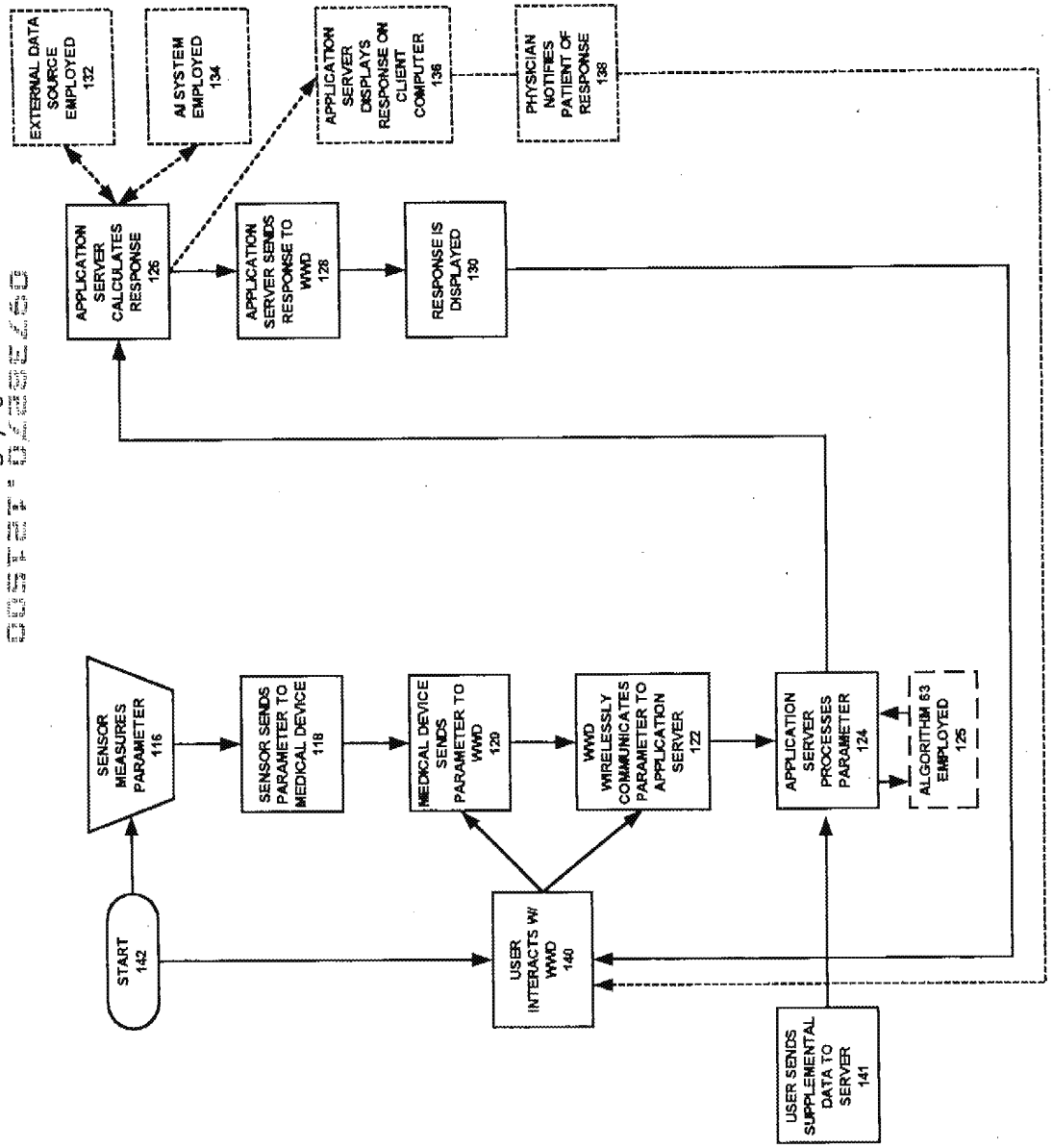
EXTERNAL DATA SOURCE EMPLOYED 132
AI SYSTEM EMPLOYED 134
APPLICATION SERVER DISPLAYS RESPONSE ON CLIENT COMPUTER 136
PHYSICIAN NOTIFIES PATIENT OF RESPONSE 138
APPLICATION SERVER CALCULATES RESPONSE 126
APPLICATION SERVER SENDS RESPONSE TO WWD 128
RESPONSE IS DISPLAYED 130
SENSOR MEASURES PARAMETER 116
SENSOR SENDS PARAMETER TO MEDICAL DEVICE 118
MEDICAL DEVICE SENDS PARAMETER TO WWD 120
WWD WIRELESSLY COMMUNICATES PARAMETER TO APPLICATION SERVER 122
APPLICATION SERVER PROCESSES PARAMETER 124
ALGORITHM 63 EMPLOYED 125
START 142
USER INTERACTS W/ WWD 140
USER SENDS SUPPLEMENTAL DATA TO SERVER 141

FIG. 5

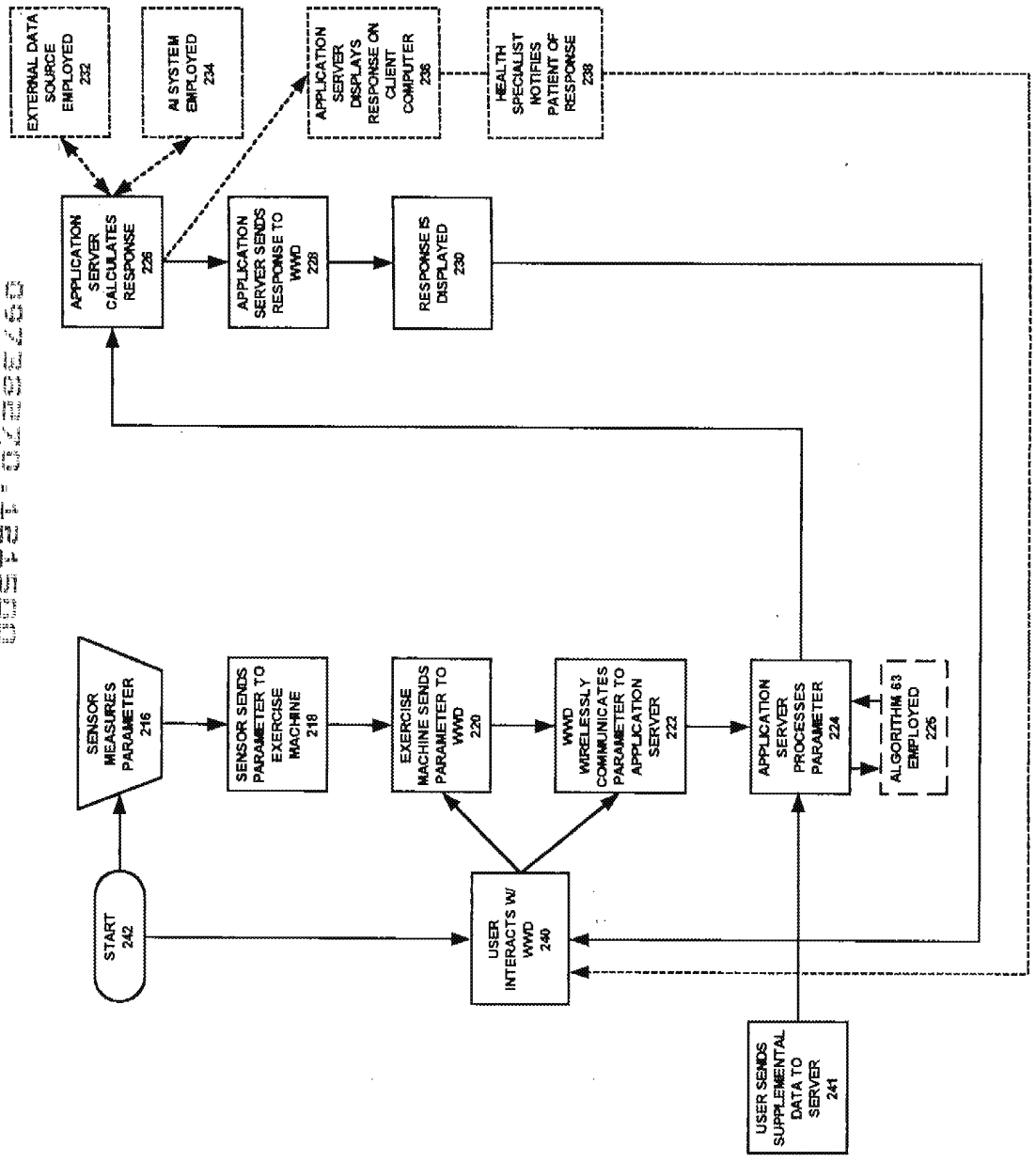
START 242
SENSOR MEASURES PARAMETER 216
SENSOR SENDS PARAMETER TO EXERCISE MACHINE 218
EXERCISE MACHINE SENDS PARAMETER TO WWD 220
WWD WIRELESSLY COMMUNICATES PARAMETER TO APPLICATION SERVER 222
APPLICATION SERVER PROCESSES PARAMETER 224
ALGORITHM 63 EMPLOYED 226
USER INTERACTS W/ WWD 240
USER SENDS SUPPLEMENTAL DATA TO SERVER 241
APPLICATION SERVER CALCULATES RESPONSE 226
APPLICATION SERVER SENDS RESPONSE TO WWD 228
RESPONSE IS DISPLAYED 230
EXTERNAL DATA SOURCE EMPLOYED 232
AI SYSTEM EMPLOYED 234
APPLICATION SERVER DISPLAYS RESPONSE ON CLIENT COMPUTER 236
HEALTH SPECIALIST NOTIFIES PATIENT OF RESPONSE 238

FIG. 6

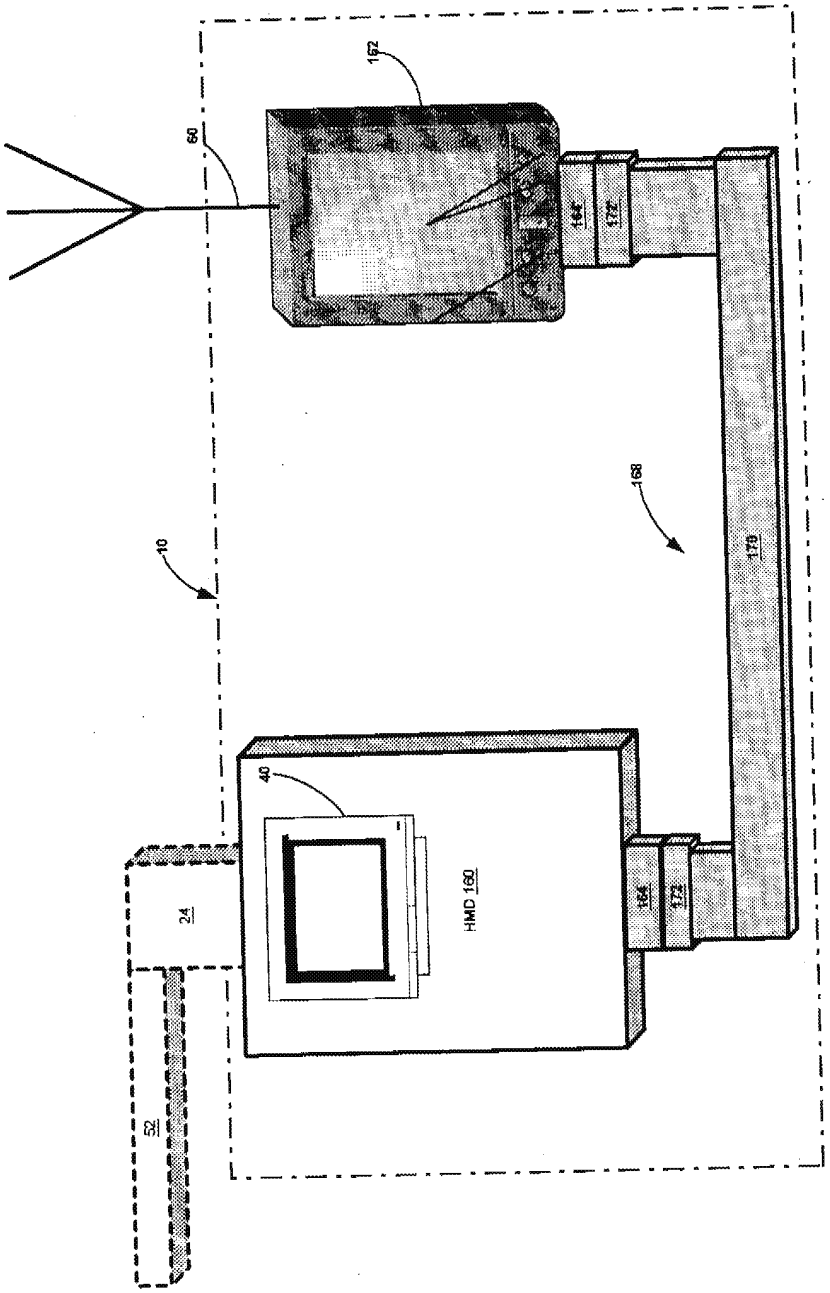

FIG. 7

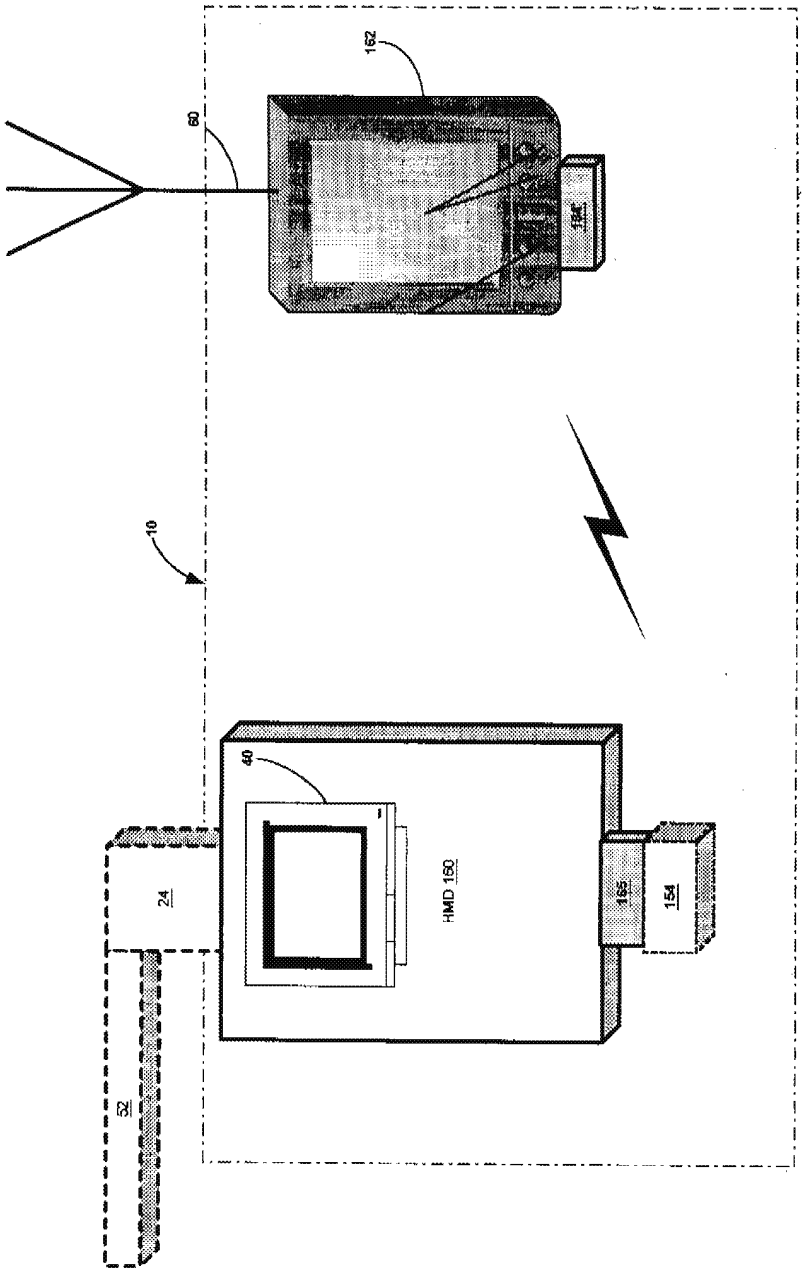

FIG. 8

PRINT OF DRAWINGS
AS ORIGINALLY FILED

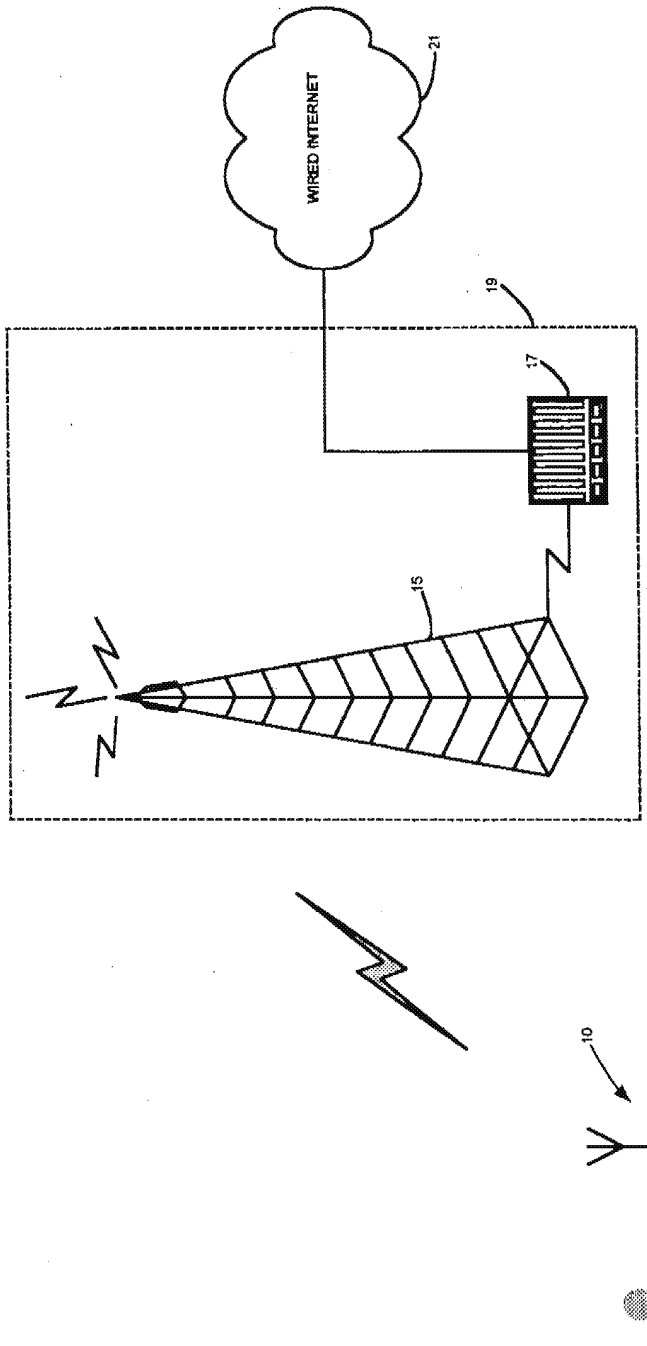

FIG. 1

SUBSTITUTE SHEET (RULE 26)

PRINT OF DRAWINGS
AS ORIGINALLY FILED

2 / 8

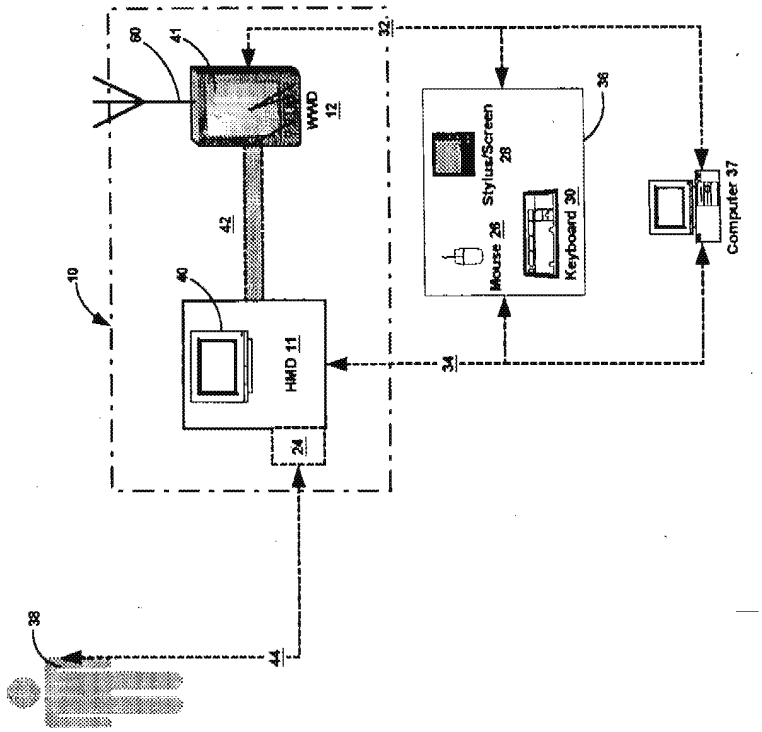

FIG. 2

PRINT OF DRAWINGS
AS ORIGINALLY FILED

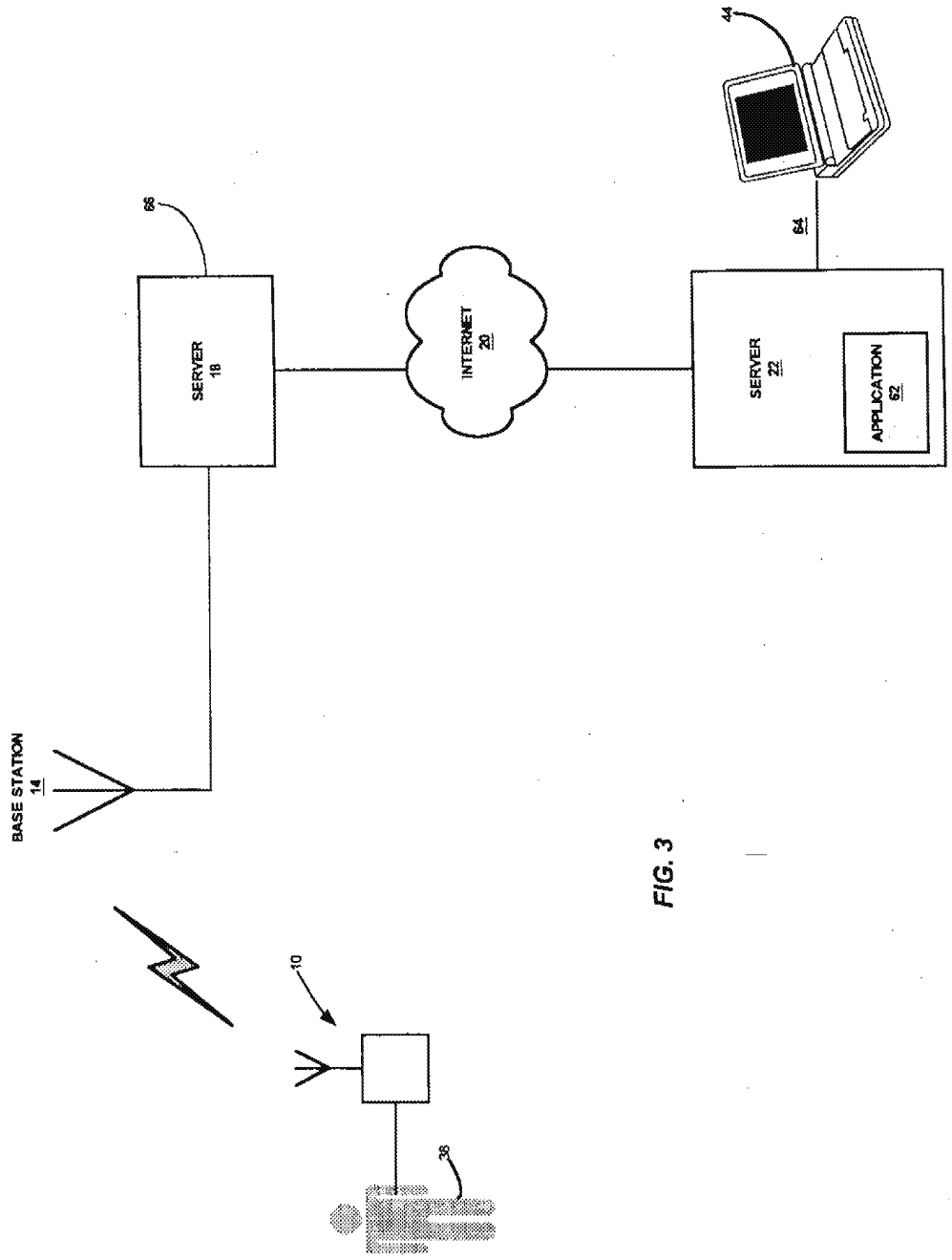

FIG. 3

PRINT OF DRAWINGS
AS ORIGINALLY FILED

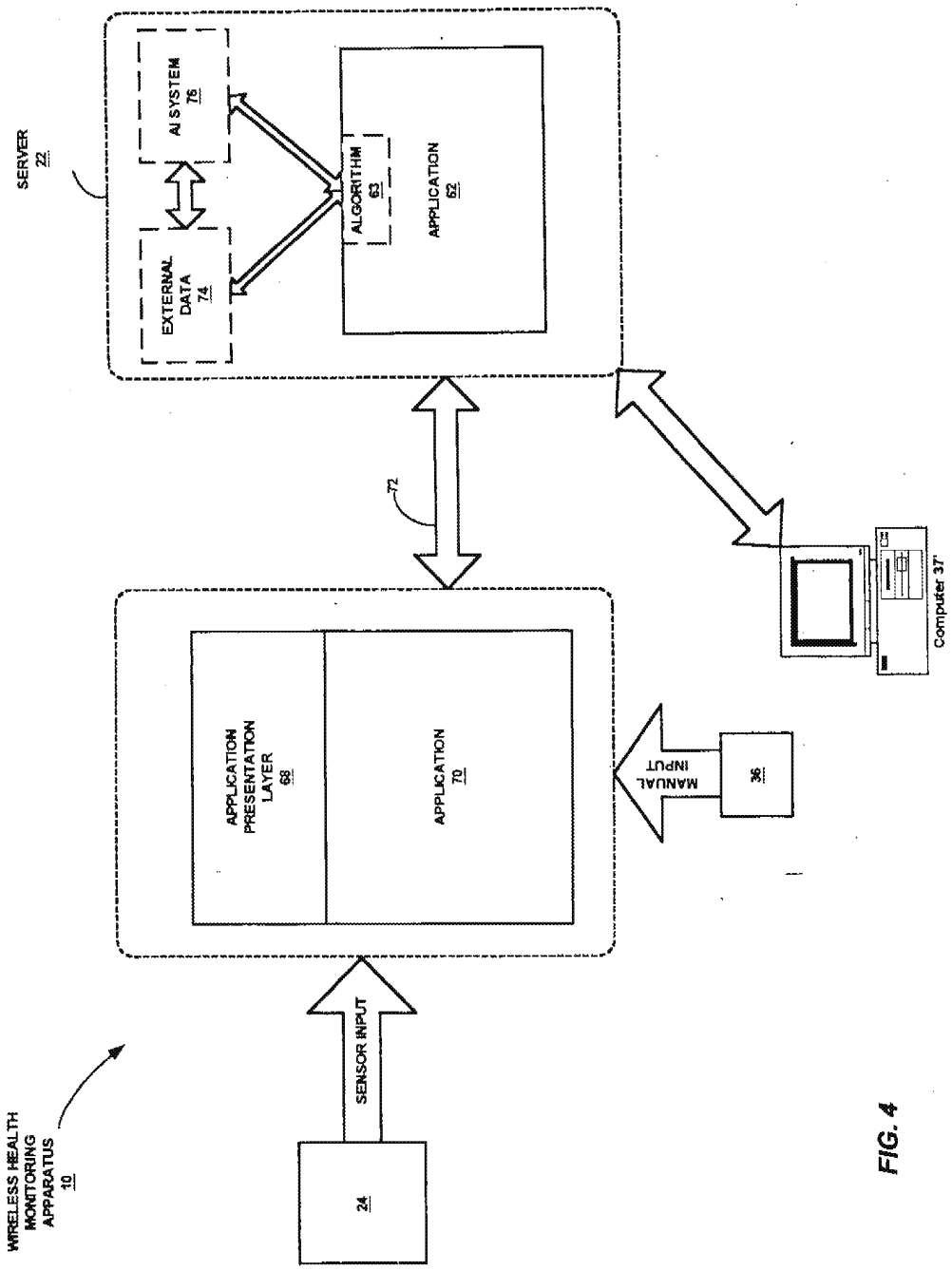

FIG. 4

4 / 8

PRINT OF DRAWINGS
AS ORIGINALLY FILED

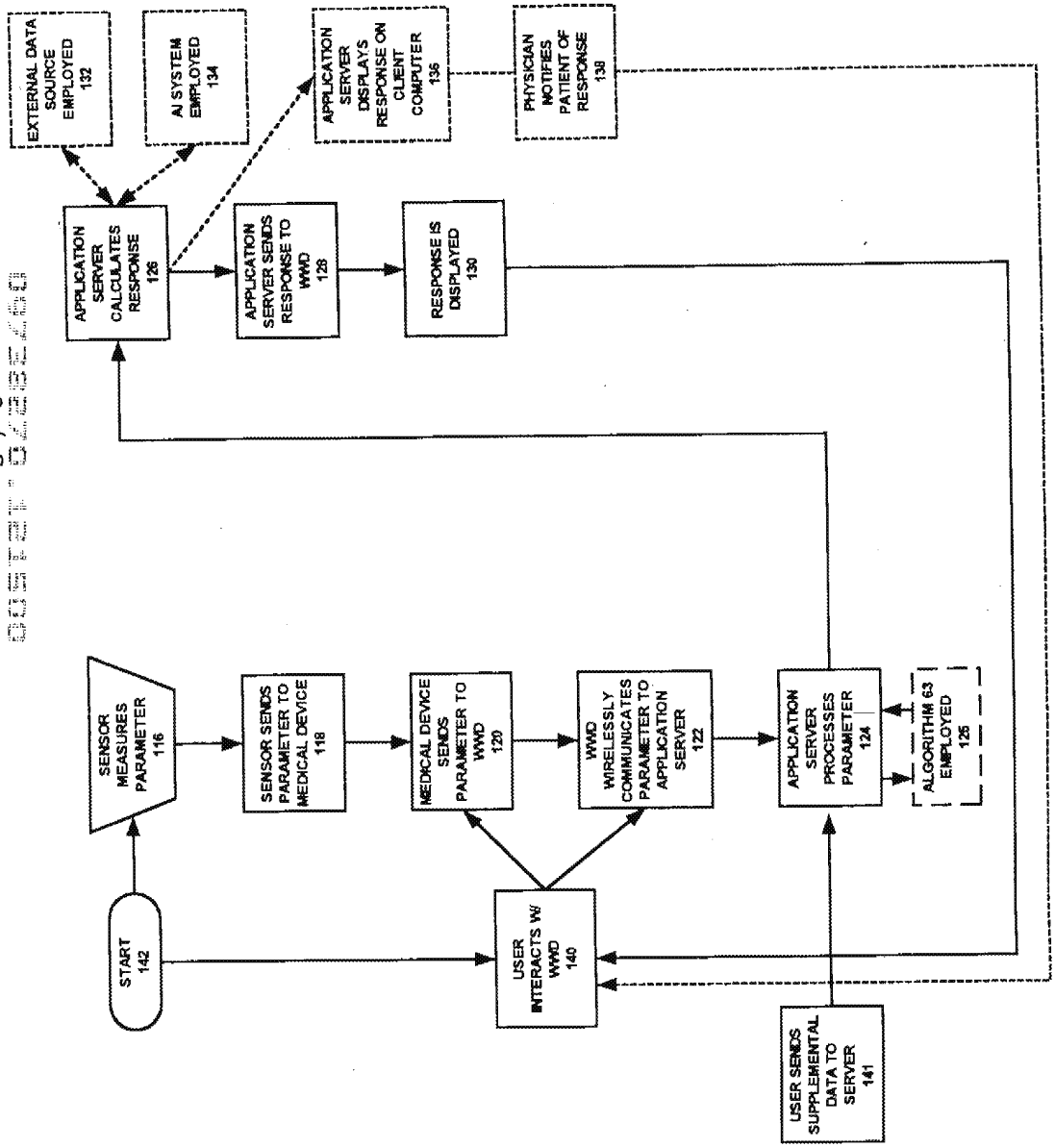

FIG. 5

5 / 8

PRINT OF DRAWINGS
AS ORIGINALLY FILED

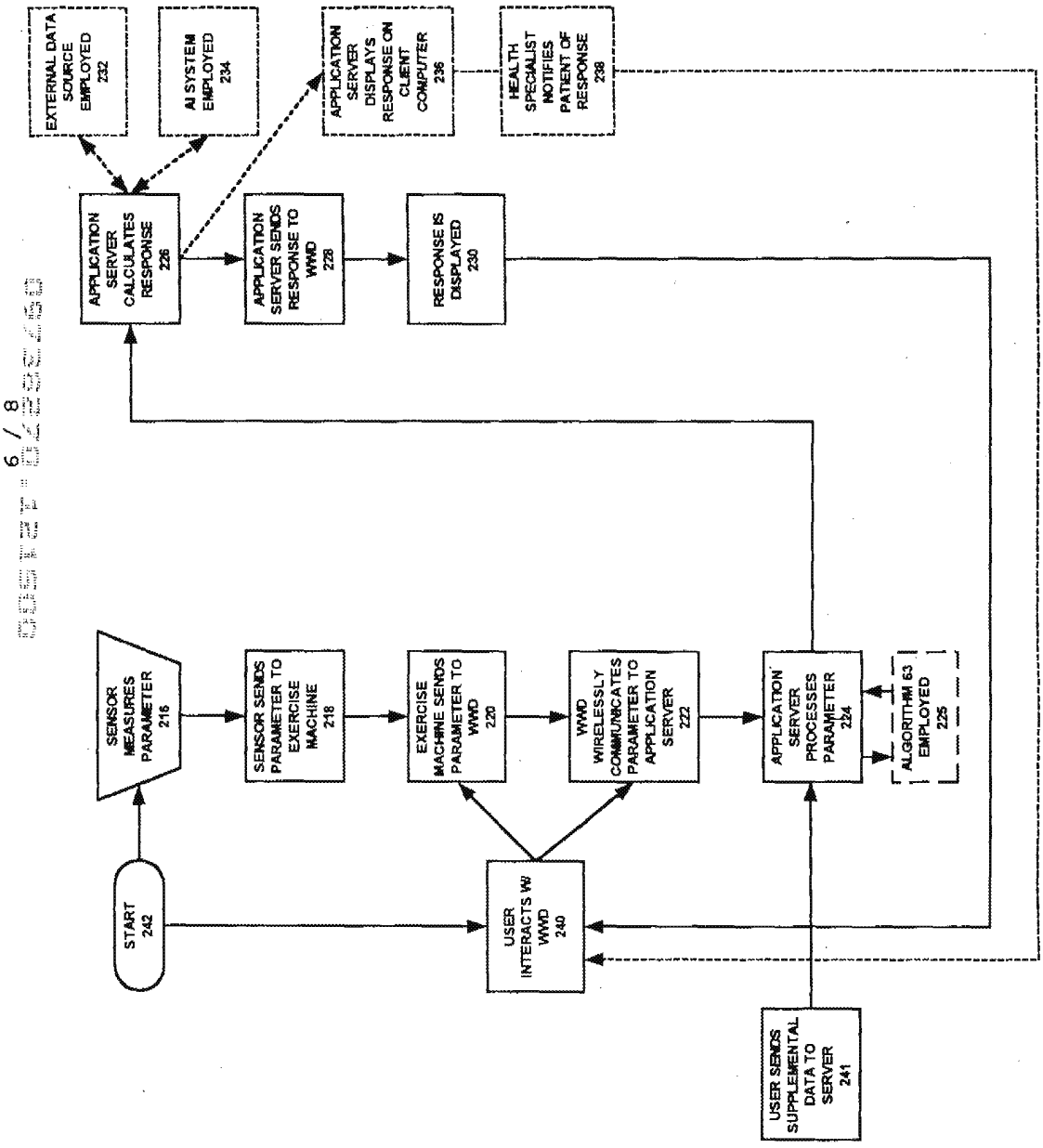

FIG. 6

PRINT OF DRAWINGS
AS ORIGINALLY FILED

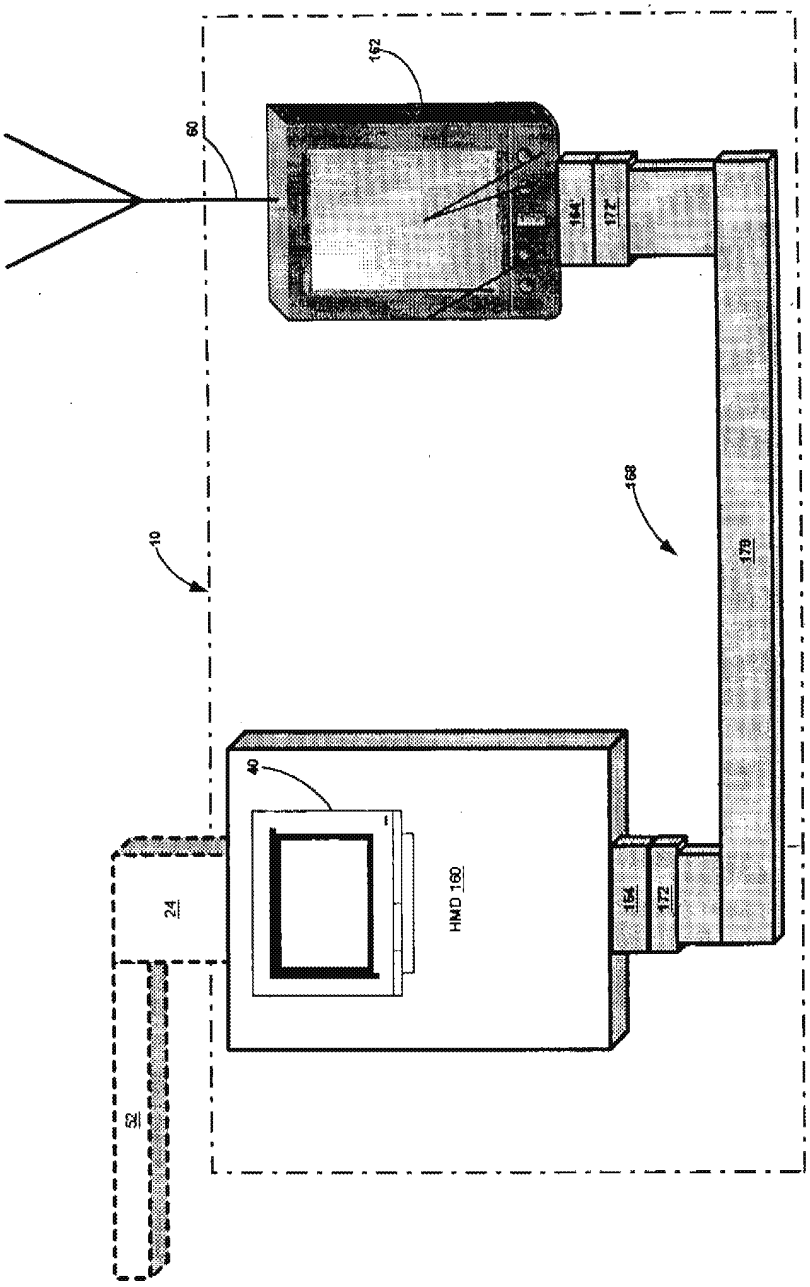

FIG. 7

PRINT OF DRAWINGS
AS ORIGINALLY FILED

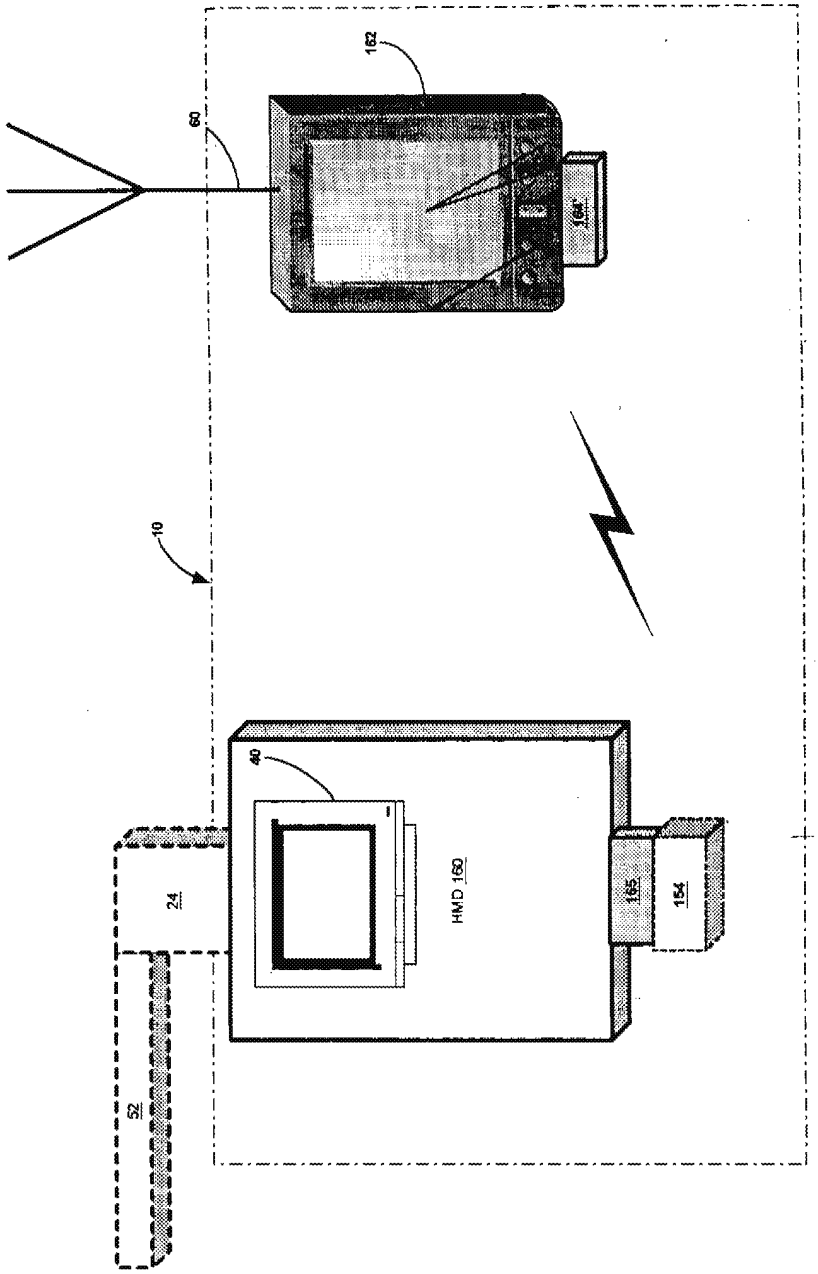

FIG. 8

8 / 8

The following was found to be missing from the Official PTO File Wrapper

Paper #2

DIGIPAT®

PATENT / TRADEMARK DOCUMENT & RESEARCH SERVICES

Your source for complete patent and trademark services.

2001 Jefferson Davis Highway, Suite 1111, Arlington, VA 22202

Phone: 703-413-3667
800-362-5950

Fax: 703-413-3668
888-362-3657

www.digipat.com

 13

UNITED STATES PATENT AND TRADEMARK OFFICE

COMMISSIONER FOR PATENTS
UNITED STATES PATENT AND TRADEMARK OFFICE
WASHINGTON, D.C. 20231
www.uspto.gov

APPLICATION NUMBER	FILING/RECEIPT DATE	FIRST NAMED APPLICANT	ATTORNEY DOCKET NUMBER
09/738,270	12/15/2000	Roger J. Quy	00125/002001

CONFIRMATION NO. 1635

FORMALITIES LETTER

OC000000006127381

Mark D. Wieczorek
5038 Saratoga Avenue
San Diego, CA 92107

Date Mailed: 05/30/2001

NOTICE TO FILE MISSING PARTS OF NONPROVISIONAL APPLICATION

FILED UNDER 37 CFR 1.53(b)

Filing Date Granted

An application number and filing date have been accorded to this application. The item(s) indicated below, however, are missing. Applicant is given **TWO MONTHS** from the date of this Notice within which to file all required items and pay any fees required below to avoid abandonment. Extensions of time may be obtained by filing a petition accompanied by the extension fee under the provisions of 37 CFR 1.136(a).

- The statutory basic filing fee is missing.
  *Applicant must submit $ **355** to complete the basic filing fee and/or file a small entity statement claiming such status (37 CFR 1.27).*
- Total additional claim fee(s) for this application is $1085.
  - **$765** for **85** total claims over 20.
  - **$320** for **8** independent claims over 3 .
- The oath or declaration is missing.
  A properly signed oath or declaration in compliance with 37 CFR 1.63, identifying the application by the above Application Number and Filing Date, is required.
- To avoid abandonment, a late filing fee or oath or declaration surcharge as set forth in 37 CFR 1.16(e) of $65 for a small entity in compliance with 37 CFR 1.27, must be submitted with the missing items identified in this letter.
- **The balance due by applicant is $ 1505.**

A copy of this notice MUST be returned with the reply.

Customer Service Center
Initial Patent Examination Division (703) 308-1202
PART 3 - OFFICE COPY

PATENT

IN THE UNITED STATES PATENT AND TRADEMARK OFFICE

Applicant: **Roger J. Quy**	**Title:**	**Method and Apparatus for Health and Disease Management Combining Patient Data Monitoring with Wireless Internet Connectivity**
Serial No.: 09/738,270	**Examiner:**	**Not Yet Known**
Filed: December 15, 2000	**Group Art Unit:**	**3762**

RESPONSE TO NOTICE TO FILE MISSING PARTS

OF NONPROVISIONAL APPLICATION

Commissioner for Patents
Washington, D.C. 20231

Dear Sir:

Applicant hereby responds to the Notice to File Missing Parts of Nonprovisional Application dated May 30, 2001 by submitting a check in the amount of $1,505.00 for the filing fee and surcharge and a signed declaration.

I hereby certify that this correspondence is being deposited with the United States Postal Service as First Class Mail in an envelope addressed to the Commissioner for Patents, Washington, D.C. 20231, on:

June 12, 2001
(Date of Deposit)

Brenda Godfrey
(Name of the Person Making the Deposit)

(Signature)

June 12, 2001
(Date of Signature)

If any additional fees are required in connection with this paper, authorization is hereby given to the Commissioner of Patents and Trademarks to charge the same to Deposit Account No. 50-1187.

Date: June 12, 2001

Mark D. Wieczorek
Attorney for Applicant
Registration No. 37,966

P.O. Box 70072
San Diego, CA 92167
Phone: (619) 223-7210
Fax: (619) 223-7210

E JC176
JUN 15 2001
PATENT & TRADEMARK OFFICE

#4

UNITED STATES PATENT AND TRADEMARK OFFICE

COMMISSIONER FOR PATENTS
UNITED STATES PATENT AND TRADEMARK OFFICE
WASHINGTON, D.C. 20231
www.uspto.gov

APPLICATION NUMBER	FILING/RECEIPT DATE	FIRST NAMED APPLICANT	ATTORNEY DOCKET NUMBER
09/738,270	12/15/2000	Roger J. Quy	00125/002001

CONFIRMATION NO. 1635

FORMALITIES LETTER

OC000000006127381

Mark D. Wieczorek
5038 Saratoga Avenue
San Diego, CA 92107

Date Mailed: 05/30/2001

NOTICE TO FILE MISSING PARTS OF NONPROVISIONAL APPLICATION

FILED UNDER 37 CFR 1.53(b)

Filing Date Granted

An application number and filing date have been accorded to this application. The item(s) indicated below, however, are missing. Applicant is given **TWO MONTHS** from the date of this Notice within which to file all required items and pay any fees required below to avoid abandonment. Extensions of time may be obtained by filing a petition accompanied by the extension fee under the provisions of 37 CFR 1.136(a).

- The statutory basic filing fee is missing.
  *Applicant must submit $ **355** to complete the basic filing fee and/or file a small entity statement claiming such status (37 CFR 1.27).*
- Total additional claim fee(s) for this application is $1085.
  - **$765** for **85** total claims over 20.
  - **$320** for **8** independent claims over 3 .
- The oath or declaration is missing.
  A properly signed oath or declaration in compliance with 37 CFR 1.63, identifying the application by the above Application Number and Filing Date, is required.
- To avoid abandonment, a late filing fee or oath or declaration surcharge as set forth in 37 CFR 1.16(e) of $65 for a small entity in compliance with 37 CFR 1.27, must be submitted with the missing items identified in this letter.
- **The balance due by applicant is $ 1505.**

A copy of this notice MUST be returned with the reply.

06/19/2001 MBERHE 00000056 09738270

01 FC:201	355.00 OP
02 FC:205	65.00 OP
03 FC:203	765.00 OP
04 FC:202	320.00 OP

Customer Service Center
Initial Patent Examination Division (703) 308-1202

PART 2 - COPY TO BE RETURNED WITH RESPONSE

Express Mail Label No.

JUN 15 2001
PATENT & TRADEMARK OFFICE

Docket No.
00125/002001

Declaration and Power of Attorney For Patent Application

English Language Declaration

As a below named inventor, I hereby declare that:

My residence, post office address and citizenship are as stated below next to my name,

I believe I am the original, first and sole inventor (if only one name is listed below) or an original, first and joint inventor (if plural names are listed below) of the subject matter which is claimed and for which a patent is sought on the invention entitled

Method and Apparatus for Health and Disease Management Combining Patient Data Monitoring with Wireless Internet Connectivity

the specification of which

(check one)

☐ is attached hereto.

☒ was filed on **December 15, 2000** as United States Application No. or PCT International Application Number **09/738,270**

and was amended on _____
(if applicable)

I hereby state that I have reviewed and understand the contents of the above identified specification, including the claims, as amended by any amendment referred to above.

I acknowledge the duty to disclose to the United States Patent and Trademark Office all information known to me to be material to patentability as defined in Title 37, Code of Federal Regulations, Section 1.56.

I hereby claim foreign priority benefits under Title 35, United States Code, Section 119(a)-(d) or Section 365(b) of any foreign application(s) for patent or inventor's certificate, or Section 365(a) of any PCT International application which designated at least one country other than the United States, listed below and have also identified below, by checking the box, any foreign application for patent or inventor's certificate or PCT International application having a filing date before that of the application on which priority is claimed.

Prior Foreign Application(s)			Priority Not Claimed
(Number)	(Country)	(Day/Month/Year Filed)	☐
(Number)	(Country)	(Day/Month/Year Filed)	☐
(Number)	(Country)	(Day/Month/Year Filed)	☐

I hereby claim the benefit under 35 U.S.C. Section 119(e) of any United States provisional application(s) listed below:

60/172,486	12/17/99
(Application Serial No.)	(Filing Date)
(Application Serial No.)	(Filing Date)
(Application Serial No.)	(Filing Date)

I hereby claim the benefit under 35 U. S. C. Section 120 of any United States application(s), or Section 365(c) of any PCT International application designating the United States, listed below and, insofar as the subject matter of each of the claims of this application is not disclosed in the prior United States or PCT International application in the manner provided by the first paragraph of 35 U.S.C. Section 112, I acknowledge the duty to disclose to the United States Patent and Trademark Office all information known to me to be material to patentability as defined in Title 37, C. F. R., Section 1.56 which became available between the filing date of the prior application and the national or PCT International filing date of this application:

(Application Serial No.)	(Filing Date)	(Status) (patented, pending, abandoned)
(Application Serial No.)	(Filing Date)	(Status) (patented, pending, abandoned)
(Application Serial No.)	(Filing Date)	(Status) (patented, pending, abandoned)

I hereby declare that all statements made herein of my own knowledge are true and that all statements made on information and belief are believed to be true; and further that these statements were made with the knowledge that willful false statements and the like so made are punishable by fine or imprisonment, or both, under Section 1001 of Title 18 of the United States Code and that such willful false statements may jeopardize the validity of the application or any patent issued thereon.

POWER OF ATTORNEY: As a named inventor, I hereby appoint the following attorney(s) and/or agent(s) to prosecute this application and transact all business in the Patent and Trademark Office connected therewith. *(list name and registration number)*

Mark D. Wieczorek, Reg. No. 37,966

Send Correspondence to: **Mark D. Wieczorek**
5038 Saratoga Ave.
San Diego, CA 92107

Direct Telephone Calls to: *(name and telephone number)*
Mark D. Wieczorek, 619/223-7210

Full name of sole or first inventor **Roger J. Quy**
Sole or first inventor's signature — Date 12/20/00
Residence **14 Topside Way, Mill Valley, CA 94941**
Citizenship **Great Britain**
Post Office Address **c/o Technology Partners, 550 University Ave., Palo Alto, CA 94301**

Full name of second inventor, if any
Second inventor's signature — Date
Residence
Citizenship
Post Office Address

OIPE JC773 JUN 08 2001 PATENT & TRADEMARK OFFICE

03CO #5

PATENT

IN THE UNITED STATES PATENT AND TRADEMARK OFFICE

Applicant(s): **Roger J. Quy**	)	**Title** **METHOD AND APPARATUS FOR HEALTH AND DISEASE MANAGEMENT COMBINING DATA MONITORING WITH WIRELESS INTERNET CONNECTIVITY**
Serial No.: 09/738,270	)	**Examiner: Unknown**
Filed: December 15, 2000	)	**Group Art Unit: Unknown**

INFORMATION DISCLOSURE STATEMENT UNDER 37 CFR § 1.97 (1)

Commissioner for Patents
Washington, D.C. 20231

The following items are being submitted for this Information Disclosure Statement:

1. X Preliminary Statements
2. X FORM PTO - 1449

I hereby certify that this correspondence is being deposited with the United States Postal Service as First Class Mail in an envelope addressed to the Commissioner for Patents, Washington, D.C. 20231, on:

June 4, 2001
(Date of Deposit)

Brenda L. Godfrey
(Name of the Person Making the Deposit)

Brenda L. Godfrey
(Signature)

June 4, 2001
(Date of Signature)

OIPE
JUN 0 8 2001
PATENT & TRADEMARK OFFICE

1. **Preliminary Statements**

Applicants cite herewith patents, publications or other information of which they are aware, which they believe may be material to the examination of this application and in respect of which there may be a duty to disclose in accordance with 37 CFR 1.56.

The filing of this information disclosure statement shall not be construed as a representation that a search has been made, an admission that the information cited is, or is considered to be, material to patentability or that no other material information exists. The filing of this information disclosure statement shall not be construed as an admission against interest in any manner.

Each item of information contained in this Information Disclosure Statement was cited in a communication or search report from a foreign patent office in a counterpart foreign application not more than three (3) months prior to the filing of this Information Disclosure Statement. Said foreign communication or search report is dated April 9, 2001 and a copy of same is provided herewith in addition to the references cited therein.

No fee is believed to be due in connection with this submission as this Information Disclosure Statement is being filed within three (3) months of the date of the foreign communication or search report. However, if any fees are required in connection with this paper, authorization is hereby given to the Commissioner for Patents to charge same to Deposit Account No. 50-1187.

Date: June 4, 2001

Mark D. Wieczorek
Attorney for Applicants
Registration No. 37,966

P.O. Box 70072
San Diego, CA 92167
Phone: (619) 223-7210
Fax: (619) 223-7210

The following was found to be missing from the Official PTO File Wrapper

Paper #6

DIGIPAT®

PATENT / TRADEMARK DOCUMENT & RESEARCH SERVICES

Your source for complete patent and trademark services.

2001 Jefferson Davis Highway, Suite 1111, Arlington, VA 22202

Phone: 703-413-3667
800-362-5950

Fax: 703-413-3668
888-362-3657

www.digipat.com

OIPE JC 1600 MAR 13 2002 PATENT & TRADEMARK OFFICE

Please type a plus sign (+) inside this box → ☐

COPY OF PAPERS ORIGINALLY FILED

00125/002001 #7

3762

PTO/SB/123 (10-00)
Approved for use through 10/31/2002. OMB 0651-0035
U.S. Patent and Trademark Office, U.S. DEPARTMENT OF COMMERCE
Under the Paperwork Reduction Act of 1995, no persons are required to respond to a collection of information unless it displays a valid OMB control number.

CHANGE OF CORRESPONDENCE ADDRESS
Patent

Address to:
Assistant Commissioner for Patents
Washington, D.C. 20231

Patent Number	
Issue Date	
Application Number	09/738,270
Filing Date	12-15-00
First Named Inventor	Guy

Please change the Correspondence Address for the above-identified patent to:

☐ Customer Number ☐ → *Type Customer Number here*

OR

☐

Place Customer Number Bar Code Label here

Firm or Individual Name	Mark D. Wieczorek				
Address	P.O. Box 70072				
Address					
City	San Diego	State	CA	ZIP	92167
Country	US				
Telephone	619-223-7210	Fax	619-223-7210		

This form cannot be used to change the data associated with a Customer Number. To change the data associated with an existing Customer Number use "Request for Customer Number Data Change" (PTO/SB/124).

This form will not affect any "fee address" provided for the above-identified patent. To change a "fee address" use the "Fee Address Indication Form" (PTO/SB/47).

I am the :

☐ Patentee.

☐ Assignee of record of the entire interest. See 37 CFR 3.71. Statement under 37 CFR 3.73(b) is enclosed. (Form PTO/SB/96).

☒ Attorney or agent of record.

RECEIVED MAR 19 2002 TC 3700 MAIL ROOM

Typed or Printed Name	Mark D. Wieczorek, Reg. No. 37,966
Signature	Mark D. Wieczorek
Date	March 4, 2002

NOTE: Signatures of all the inventors or assignees of record of the entire interest or their representative(s) are required. Submit multiple forms if more than one signature is required, see below*.

☐ *Total of _____ forms are submitted.

Burden Hour Statement: This form is estimated to take 3 minutes to complete. Time will vary depending upon the needs of the individual case. Any comments on the amount of time you are required to complete this form should be sent to the Chief Information Officer, U.S. Patent and Trademark Office, Washington, DC 20231. DO NOT SEND FEES OR COMPLETED FORMS TO THIS ADDRESS. SEND TO: Assistant Commissioner for Patents, Washington, DC 20231.

Notice of Allowability	Application No. 09/738,270	Applicant(s) QUY, ROGER J.
	Examiner Willis R. Wolfe, Jr.	Art Unit 3747

-- The MAILING DATE of this communication appears on the cover sheet with the correspondence address--

All claims being allowable, PROSECUTION ON THE MERITS IS (OR REMAINS) CLOSED in this application. If not included herewith (or previously mailed), a Notice of Allowance (PTOL-85) or other appropriate communication will be mailed in due course. **THIS NOTICE OF ALLOWABILITY IS NOT A GRANT OF PATENT RIGHTS.** This application is subject to withdrawal from issue at the initiative of the Office or upon petition by the applicant. See 37 CFR 1.313 and MPEP 1308.

1. ☐ This communication is responsive to _____.
2. ☒ The allowed claim(s) is/are *1-105*.
3. ☐ The drawings filed on _____ are accepted by the Examiner.
4. ☐ Acknowledgment is made of a claim for foreign priority under 35 U.S.C. § 119(a)-(d) or (f).
   a) ☐ All b) ☐ Some* c) ☐ None of the:
      1. ☐ Certified copies of the priority documents have been received.
      2. ☐ Certified copies of the priority documents have been received in Application No. _____.
      3. ☐ Copies of the certified copies of the priority documents have been received in this national stage application from the International Bureau (PCT Rule 17.2(a)).

   * Certified copies not received: _____.
5. ☒ Acknowledgment is made of a claim for domestic priority under 35 U.S.C. § 119(e) (to a provisional application).
   (a) ☐ The translation of the foreign language provisional application has been received.
6. ☐ Acknowledgment is made of a claim for domestic priority under 35 U.S.C. §§ 120 and/or 121.

Applicant has THREE MONTHS FROM THE "MAILING DATE" of this communication to file a reply complying with the requirements noted below. Failure to timely comply will result in ABANDONMENT of this application. **THIS THREE-MONTH PERIOD IS NOT EXTENDABLE.**

7. ☐ A SUBSTITUTE OATH OR DECLARATION must be submitted. Note the attached EXAMINER'S AMENDMENT or NOTICE OF INFORMAL PATENT APPLICATION (PTO-152) which gives reason(s) why the oath or declaration is deficient.

8. ☒ CORRECTED DRAWINGS must be submitted.
   (a) ☒ including changes required by the Notice of Draftsperson's Patent Drawing Review (PTO-948) attached
      1) ☒ hereto or 2) ☐ to Paper No. _____.
   (b) ☐ including changes required by the proposed drawing correction filed _____, which has been approved by the Examiner.
   (c) ☐ including changes required by the attached Examiner's Amendment / Comment or in the Office action of Paper No. _____.

Identifying indicia such as the application number (see 37 CFR 1.84(c)) should be written on the drawings in the top margin (not the back) of each sheet. The drawings should be filed as a separate paper with a transmittal letter addressed to the Official Draftsperson.

9. ☐ DEPOSIT OF and/or INFORMATION about the deposit of BIOLOGICAL MATERIAL must be submitted. Note the attached Examiner's comment regarding REQUIREMENT FOR THE DEPOSIT OF BIOLOGICAL MATERIAL.

Attachment(s)

1☒ Notice of References Cited (PTO-892)
2☐ Notice of Informal Patent Application (PTO-152)
3☒ Notice of Draftperson's Patent Drawing Review (PTO-948)
4☐ Interview Summary (PTO-413), Paper No._____.
5☒ Information Disclosure Statements (PTO-1449), Paper No. 5.
6☒ Examiner's Amendment/Comment
7☐ Examiner's Comment Regarding Requirement for Deposit of Biological Material
8☐ Examiner's Statement of Reasons for Allowance
9☐ Other

EXAMINER'S AMENDMENT

An examiner's amendment to the record appears below. Should the changes and/or additions be unacceptable to applicant, an amendment may be filed as provided by 37 CFR 1.312. To ensure consideration of such an amendment, it MUST be submitted no later than the payment of the issue fee.

The abstract should be in narrative form and generally limited to a single paragraph on a separate sheet within the range of 50 to 150 words. It is important that the abstract not exceed 150 words in length since the space provided for the abstract on the computer tape used by the printer is limited. The form and legal phraseology often used in patent claims, such as "means" and "said," should be avoided. The abstract should describe the disclosure sufficiently to assist readers in deciding whether there is a need for consulting the full patent text for details. The language should be clear and concise and should not repeat information given in the title. It should avoid using phrases which can be implied, such as, "The disclosure concerns," "The disclosure defined by this invention," "The disclosure describes," etc.

The application has been amended as follows:

The abstract has been replaced by a shorten version on an attached page.

The lengthy specification has not been checked to the extent necessary to determine the presence of all possible minor errors. Applicant's cooperation is requested in correcting any errors of which applicant may become aware in the specification.

Any inquiry concerning this communication or earlier communications from the examiner should be directed to Willis R. Wolfe, Jr. whose telephone number is (703) 308-1950. The examiner can normally be reached on 4/10 Monday off.

If attempts to reach the examiner by telephone are unsuccessful, the examiner's supervisor, Louis G. Mancene can be reached on (703) 308-1946. The fax phone numbers for the organization where this application or proceeding is assigned are (703) 872-9302 for regular communications and (703) 872-9303 for After Final communications.

Any inquiry of a general nature or relating to the status of this application or proceeding should be directed to the receptionist whose telephone number is (703) 308-0861.

Willis R. Wolfe, Jr.
Primary Examiner
Art Unit 3747

WRW
December 12, 2002

ABSTRACT

A method and apparatus for a wireless health monitoring system for interactively monitoring a disease or health condition of a patient by connecting an internet-enabled wireless web device ("WWD") to a health monitoring device which may be a medical device or other health related device. The WWD may be connected to the health monitoring device directly by a wired connection to a generic input/output port of the WWD or wirelessly connected to the health monitoring device, such as via an infrared or radio frequency connection. The health related data is transmitted from the WWD to a server using standard internet protocols. The server calculates a response using a software program while providing for review bt a physician or health specialist. The user may interact with the server, for example, the server transmits a response to the WWD and the user may answer the response or provide other information.

part of #8

ABSTRACT

A method and apparatus for a wireless health monitoring system for interactively monitoring a disease or health condition of a patient by connecting an internet-enabled wireless web device ("WWD") to a health monitoring device which may be a medical device or other health related device. The WWD may be connected to the health monitoring device directly by a wired connection to a generic input/output port of the WWD or wirelessly connected to the health monitoring device, such as via an infrared or radio frequency connection. The health related data is transmitted from the WWD to a server using standard internet protocols. The server calculates a response using a software program while providing for review bt a physician or health specialist. The user may interact with the server, for example, the server transmits a response to the WWD and the user may answer the response or provide other information.

Form PTO 948 (Rev. 03/01) U.S. DEPARTMENT OF COMMERCE - Patent and Trademark Office Application No. 09/738270

NOTICE OF DRAFTSPERSON'S PATENT DRAWING REVIEW

The drawing(s) filed (insert date) 12/15/00 are:

A. ☐ approved by the Draftsperson under 37 CFR 1.84 or 1.152.

B. ☑ objected to by the Draftsperson under 37 CFR 1.84 or 1.152 for the reasons indicated below. The Examiner will require submission of new, corrected drawings when necessary. Corrected drawing must be sumitted according to the instructions on the back of this notice.

1. DRAWINGS. 37 CFR 1.84(a): Acceptable categories of drawings: Black ink. Color.
   - ___ Color drawings are not acceptable until petiton is granted. Fig(s) ___
   - ___ Pencil and non black ink not permitted. Fig(s) ___
2. PHOTOGRAPHS. 37 CFR 1.84(b)
   - ___ 1 full-tone set is required. Fig(s) ___
   - ___ Photographs may not be mounted. 37 CFR 1.84(e)
   - ___ Poor quality (half-tone). Fig(s) ___
3. TYPE OF PAPER. 37 CFR 1.84(e)
   - ___ Paper not flexible, strong, white, and durable. Fig(s) ___
   - ___ Erasures, alterations, overwritings, interlineations, folds, copy machine marks not accepted. Fig(s) ___
   - ___ Mylar, velum paper is not acceptable (too thin). Fig(s) ___
4. SIZE OF PAPER. 37 CFR 1.84(f): Acceptable sizes:
   - ___ 21.0 cm by 29.7 cm (DIN size A4)
   - ___ 21.6 cm by 27.9 cm (8 1/2 x 11 inches)
   - ___ All drawing sheets not the same size. Sheet(s) ___
   - ___ Drawings sheets not an acceptable size. Fig(s) ___
5. MARGINS. 37 CFR 1.84(g): Acceptable margins:

   Top 2.5 cm Left 2.5cm Right 1.5 cm Bottom 1.0 cm
   SIZE: A4 Size

   Top 2.5 cm Left 2.5 cm Right 1.5 cm Bottom 1.0 cm
   SIZE: 8 1/2 x 11

   Margins not acceptable. Fig(s) 5, 6
   - ___ Top (T) ✓ Left (L)
   - ___ Right (R) ___ Bottom (B)
6. VIEWS. 37 CFR 1.84(h)

   REMINDER: Specification may require revision to correspond to drawing changes.

   Partial views. 37 CFR 1.84(h)(2)
   - ___ Brackets needed to show figure as one entity. Fig(s) ___
   - ___ Views not labeled separately or properly. Fig(s) ___
   - ___ Enlarged view not labeled separately or properly. Fig(s) ___
7. SECTIONAL VIEWS. 37 CFR 1.84 (h)(3)
   - ___ Hatching not indicated for sectional portions of an object. Fig(s) ___
   - ___ Sectional designation should be noted with Arabic or Roman numbers. Fig(s) ___
8. ARRANGEMENT OF VIEWS. 37 CFR 1.84(i)
   - ___ Words do not appear on a horizontal, left-to-right fashion when page is either upright or turned so that the top becomes the right side, except for graphs. Fig(s) ___
9. SCALE. 37 CFR 1.84(k)
   - ___ Scale not large enough to show mechanism without crowding when drawing is reduced in size to two-thirds in reproduction. Fig(s) ___
10. CHARACTER OF LINES, NUMBERS, & LETTERS. 37 CFR 1.84(l)
    - ___ Lines, numbers & letters not uniformly thick and well defined, clean, durable, and black (poor line quality). Fig(s) ___
11. SHADING. 37 CFR 1.84(m)
    - ___ Solid black areas pale. Fig(s) ___
    - ___ Solid black shading not permitted. Fig(s) ___
    - ___ Shade lines, pale, rough and blurred. Fig(s) ___
12. NUMBERS, LETTERS, & REFERENCE CHARACTERS. 37 CFR 1.84(p)
    - ___ Numbers and reference characters not plain and legible. Fig(s) ___
    - ___ Figure legends are poor. Fig(s) ___
    - ___ Numbers and reference characters not oriented in the same direction as the view. 37 CFR 1.84(p)(1) Fig(s) ___
    - ___ English alphabet not used. 37 CFR 1.84(p)(2) Figs ___
    - ___ Numbers, letters and reference characters must be at least .32 cm (1/8 inch) in height. 37 CFR 1.84(p)(3) Fig(s) ___
13. LEAD LINES. 37 CFR 1.84(q)
    - ___ Lead lines cross each other. Fig(s) ___
    - ___ Lead lines missing. Fig(s) ___
14. NUMBERING OF SHEETS OF DRAWINGS. 37 CFR 1.84(t)
    - ___ Sheets not numbered consecutively, and in Arabic numerals beginning with number 1. Sheet(s) ___
15. NUMBERING OF VIEWS. 37 CFR 1.84(u)
    - ___ Views not numbered consecutively, and in Arabic numerals, beginning with number 1. Fig(s) ___
16. CORRECTIONS. 37 CFR 1.84(w)
    - ___ Corrections not made from prior PTO-948 dated ___
17. DESIGN DRAWINGS. 37 CFR 1.152
    - ___ Surface shading shown not appropriate. Fig(s) ___
    - ___ Solid black shading not used for color contrast. Fig(s) ___

COMMENTS

REVIEWER CBR DATE 12/12/02 TELEPHONE NO. 7033081359

ATTACHMENT TO PAPER NO. ___

Please type a plus sign (+) inside this box →

PTO/SB/08A (10-96)
Approved for use through 10/31/99, OMB 0651-0031
Patent and Trademark Office: U.S./DEPARTMENT OF COMMERCE

Under the Paperwork Reduction Act of 1995, no persons are required to a collection of information unless it contains a valid OMB control number.

OIPE JUN 08 2001 PATENT & TRADEMARK OFFICE

Substitute for form 1449A/PTO

INFORMATION DISCLOSURE STATEMENT BY APPLICANT

(use as many sheets as necessary)

Sheet 1 of 1

Complete If Known	
Application Number	09/738,270
Filing Date	December 15, 2000
First Named Inventor	Roger J. Quy
Group Art Unit	~~Unknown~~ 3747
Examiner Name	~~Unknown~~ W. Wolfe
Attorney Docket Number	00125/002001

U.S. PATENT DOCUMENTS

Examiner Initials*	Cite No.[1]	U.S. Patent Document Number	Kind Code[2] (if known)	Name of Patentee or Applicant of Cited Document	Date of Publication of Cited document MM-DD-YYYY	Pages, Column, Lines, Where Relevant Passages or Relevant Figures Appear
[illegible]	A1	6,168,563		Brown	01-02-2001	
[illegible]	A2	6,101,478		Brown	08-08-2000	
[illegible]	A3	6,055,506		Frasca, Jr.	04-25-2000	

FOREIGN PATENT DOCUMENTS

Examiner Initials*	Cite No.[1]	Foreign Patent Document Office[3]	Number[4]	Kind Code[5] (if known)	Name of Patentee or Applicant of Cited Document	Date of Publication of Cited document MM-DD-YYYY	Pages, Column, Lines, Where Relevant Passages or Relevant Figures Appear	T[6]

Examiner Signature	W. Wolfe	Date Considered	12/13/02

*EXAMINER: Initial if reference considered, whether or not citation is in conformance with MPEP 609. Draw line through citation if not in conformance and not considered. Include copy of this form with next communication to applicant.
[1]Unique citation designation number. [2]See attached Kinds of U.S. Patent Documents. [3]Enter Office that issued the document by the two-letter code (WIPO Standard ST.3). [4]For Japanese patent documents, the indication of the year of the reign of the Emperor must precede the serial number of the patent document. [5]Kind of document by the appropriate symbols as indicated on the document under WIPO Standard ST. 16 if possible. [6]Applicant is to place a check mark here if

Notice of References Cited	Application/Control No. 09/738,270	Applicant(s)/Patent Under Reexamination QUY, ROGER J.	
	Examiner Willis R. Wolfe, Jr.	Art Unit 3747	Page 1 of 1

U.S. PATENT DOCUMENTS

*		Document Number Country Code-Number-Kind Code	Date MM-YYYY	Name	Classification
*	A	US-5,357,427 A	10-1994	Langen et al.	600/300
*	B	US-5,601,435 A	02-1997	Quy, Roger J.	434/307R
*	C	US-5,772,586 A	06-1998	Heinonen et al.	600/300
*	D	US-6,144,837 A	11-2000	Quy, Roger J.	434/307R
*	E	US-6,319,199 B1	11-2001	Sheehan et al.	600/300
*	F	US-6,336,900 B1	01-2002	Alleckson et al.	600/300
*	G	US-2002/0019584 A1	02-2002	Schulze et al.	600/300
*	H	US-6,416,471 B1	07-2002	Kumar et al.	600/300
*	I	US-6,440,068 B1	08-2002	Brown et al.	600/300
*	J	US-6,450,955 B1	09-2002	Brown et al.	600/300
*	K	US-6,458,080 B1	10-2002	Brown et al.	600/300
	L	US-			
	M	US-			

FOREIGN PATENT DOCUMENTS

*		Document Number Country Code-Number-Kind Code	Date MM-YYYY	Country	Name	Classification
	N					
	O					
	P					
	Q					
	R					
	S					
	T					

NON-PATENT DOCUMENTS

*		Include as applicable: Author, Title Date, Publisher, Edition or Volume, Pertinent Pages)
	U	
	V	
	W	
	X	

*A copy of this reference is not being furnished with this Office action. (See MPEP § 707.05(a).)
Dates in MM-YYYY format are publication dates. Classifications may be US or foreign.

UNITED STATES PATENT AND TRADEMARK OFFICE

UNITED STATES DEPARTMENT OF COMMERCE
United States Patent and Trademark Office
Address: COMMISSIONER OF PATENTS AND TRADEMARKS
Washington, D.C. 20231
www.uspto.gov

NOTICE OF ALLOWANCE AND FEE(S) DUE

7590 12/13/2002

Mark D. Wieczorek
P.O. Box 70072
San Diego, CA 92167

EXAMINER	
WOLFE JR, WILLIS RAY	
ART UNIT	CLASS-SUBCLASS
3747	600-300000

DATE MAILED: 12/13/2002

APPLICATION NO.	FILING DATE	FIRST NAMED INVENTOR	ATTORNEY DOCKET NO.	CONFIRMATION NO.
09/738,270	12/15/2000	Roger J. Quy	00125/002001	1635

TITLE OF INVENTION: METHOD AND APPARATUS FOR HEALTH AND DISEASE MANAGEMENT COMBINING PATIENT DATA MONITORING WITH WIRELESS INTERNET CONNECTIVITY

APPLN. TYPE	SMALL ENTITY	ISSUE FEE	PUBLICATION FEE	TOTAL FEE(S) DUE	DATE DUE
nonprovisional	YES	$640	$300	$940	03/13/2003

THE APPLICATION IDENTIFIED ABOVE HAS BEEN EXAMINED AND IS ALLOWED FOR ISSUANCE AS A PATENT. PROSECUTION ON THE MERITS IS CLOSED. THIS NOTICE OF ALLOWANCE IS NOT A GRANT OF PATENT RIGHTS. THIS APPLICATION IS SUBJECT TO WITHDRAWAL FROM ISSUE AT THE INITIATIVE OF THE OFFICE OR UPON PETITION BY THE APPLICANT. SEE 37 CFR 1.313 AND MPEP 1308.

THE ISSUE FEE AND PUBLICATION FEE (IF REQUIRED) MUST BE PAID WITHIN THREE MONTHS FROM THE MAILING DATE OF THIS NOTICE OR THIS APPLICATION SHALL BE REGARDED AS ABANDONED. THIS STATUTORY PERIOD CANNOT BE EXTENDED. SEE 35 U.S.C. 151. THE ISSUE FEE DUE INDICATED ABOVE REFLECTS A CREDIT FOR ANY PREVIOUSLY PAID ISSUE FEE APPLIED IN THIS APPLICATION. THE PTOL-85B (OR AN EQUIVALENT) MUST BE RETURNED WITHIN THIS PERIOD EVEN IF NO FEE IS DUE OR THE APPLICATION WILL BE REGARDED AS ABANDONED.

HOW TO REPLY TO THIS NOTICE:

I. Review the SMALL ENTITY status shown above.

If the SMALL ENTITY is shown as YES, verify your current SMALL ENTITY status:
A. If the status is the same, pay the TOTAL FEE(S) DUE shown above.

B. If the status is changed, pay the PUBLICATION FEE (if required) and twice the amount of the ISSUE FEE shown above and notify the United States Patent and Trademark Office of the change in status, or

If the SMALL ENTITY is shown as NO:

A. Pay TOTAL FEE(S) DUE shown above, or

B. If applicant claimed SMALL ENTITY status before, or is now claiming SMALL ENTITY status, check the box below and enclose the PUBLICATION FEE and 1/2 the ISSUE FEE shown above.

☐ Applicant claims SMALL ENTITY status. See 37 CFR 1.27.

II. PART B - FEE(S) TRANSMITTAL should be completed and returned to the United States Patent and Trademark Office (USPTO) with your ISSUE FEE and PUBLICATION FEE (if required). Even if the fee(s) have already been paid, Part B - Fee(s) Transmittal should be completed and returned. If you are charging the fee(s) to your deposit account, section "4b" of Part B - Fee(s) Transmittal should be completed and an extra copy of the form should be submitted.

III. All communications regarding this application must give the application number. Please direct all communications prior to issuance to Box ISSUE FEE unless advised to the contrary.

IMPORTANT REMINDER: Utility patents issuing on applications filed on or after Dec. 12, 1980 may require payment of maintenance fees. It is patentee's responsibility to ensure timely payment of maintenance fees when due.

PTOL-85 (REV. 04-02) Approved for use through 01/31/2004.

PART B - FEE(S) TRANSMITTAL

Complete and send this form, together with applicable fee(s), to: Mail Box ISSUE FEE
Commissioner for Patents
Washington, D.C. 20231
Fax (703)746-4000

INSTRUCTIONS: This form should be used for transmitting the ISSUE FEE and PUBLICATION FEE (if required). Blocks 1 through 4 should be completed where appropriate. All further correspondence including the Patent, advance orders and notification of maintenance fees will be mailed to the current correspondence address as indicated unless corrected below or directed otherwise in Block 1, by (a) specifying a new correspondence address; and/or (b) indicating a separate "FEE ADDRESS" for maintenance fee notifications.

CURRENT CORRESPONDENCE ADDRESS (Note: Legibly mark-up with any corrections or use Block 1)

7590 12/13/2002

Mark D. Wieczorek
P.O. Box 70072
San Diego, CA 92167

Note: A certificate of mailing can only be used for domestic mailings of the Fee(s) Transmittal. This certificate cannot be used for any other accompanying papers. Each additional paper, such as an assignment or formal drawing, must have its own certificate of mailing or transmission.

Certificate of Mailing or Transmission

I hereby certify that this Fee(s) Transmittal is being deposited with the United States Postal Service with sufficient postage for first class mail in an envelope addressed to the Box Issue Fee address above, or being facsimile transmitted to the USPTO, on the date indicated below.

(Depositor's name)
(Signature)
(Date)

APPLICATION NO.	FILING DATE	FIRST NAMED INVENTOR	ATTORNEY DOCKET NO.	CONFIRMATION NO.
09/738,270	12/15/2000	Roger J. Quy	00125/002001	1635

TITLE OF INVENTION: METHOD AND APPARATUS FOR HEALTH AND DISEASE MANAGEMENT COMBINING PATIENT DATA MONITORING WITH WIRELESS INTERNET CONNECTIVITY

APPLN. TYPE	SMALL ENTITY	ISSUE FEE	PUBLICATION FEE	TOTAL FEE(S) DUE	DATE DUE
nonprovisional	YES	$640	$300	$940	03/13/2003

EXAMINER	ART UNIT	CLASS-SUBCLASS
WOLFE JR, WILLIS RAY	3747	600-300000

1. Change of correspondence address or indication of "Fee Address" (37 CFR 1.363).

❑ Change of correspondence address (or Change of Correspondence Address form PTO/SB/122) attached.

❑ "Fee Address" indication (or "Fee Address" Indication form PTO/SB/47; Rev 03-02 or more recent) attached. **Use of a Customer Number is required.**

2. For printing on the patent front page, list (1) the names of up to 3 registered patent attorneys or agents OR, alternatively, (2) the name of a single firm (having as a member a registered attorney or agent) and the names of up to 2 registered patent attorneys or agents. If no name is listed, no name will be printed.

1 _____
2 _____
3 _____

3. ASSIGNEE NAME AND RESIDENCE DATA TO BE PRINTED ON THE PATENT (print or type)

PLEASE NOTE: Unless an assignee is identified below, no assignee data will appear on the patent. Inclusion of assignee data is only appropriate when an assignment has been previously submitted to the USPTO or is being submitted under separate cover. Completion of this form is NOT a substitute for filing an assignment.

(A) NAME OF ASSIGNEE (B) RESIDENCE: (CITY and STATE OR COUNTRY)

Please check the appropriate assignee category or categories (will not be printed on the patent) ❑ individual ❑ corporation or other private group entity ❑ government

4a. The following fee(s) are enclosed:

❑ Issue Fee
❑ Publication Fee
❑ Advance Order - # of Copies _____

4b. Payment of Fee(s):

❑ A check in the amount of the fee(s) is enclosed.
❑ Payment by credit card. Form PTO-2038 is attached.
❑ The Commissioner is hereby authorized by charge the required fee(s), or credit any overpayment, to Deposit Account Number _____ (enclose an extra copy of this form).

Commissioner for Patents is requested to apply the Issue Fee and Publication Fee (if any) or to re-apply any previously paid issue fee to the application identified above.

(Authorized Signature) (Date)

NOTE: The Issue Fee and Publication Fee (if required) will not be accepted from anyone other than the applicant; a registered attorney or agent; or the assignee or other party in interest as shown by the records of the United States Patent and Trademark Office.

This collection of information is required by 37 CFR 1.311. The information is required to obtain or retain a benefit by the public which is to file (and by the USPTO to process) an application. Confidentiality is governed by 35 U.S.C. 122 and 37 CFR 1.14. This collection is estimated to take 12 minutes to complete, including gathering, preparing, and submitting the completed application form to the USPTO. Time will vary depending upon the individual case. Any comments on the amount of time you require to complete this form and/or suggestions for reducing this burden, should be sent to the Chief Information Officer, U.S. Patent and Trademark Office, U.S. Department of Commerce, Washington, D.C. 20231. DO NOT SEND FEES OR COMPLETED FORMS TO THIS ADDRESS. SEND TO: Commissioner for Patents, Washington, DC 20231.

Under the Paperwork Reduction Act of 1995, no persons are required to respond to a collection of information unless it displays a valid OMB control number.

TRANSMIT THIS FORM WITH FEE(S)

UNITED STATES PATENT AND TRADEMARK OFFICE

UNITED STATES DEPARTMENT OF COMMERCE
United States Patent and Trademark Office
Address: COMMISSIONER OF PATENTS AND TRADEMARKS
Washington, D.C. 20231
www.uspto.gov

APPLICATION NO.	FILING DATE	FIRST NAMED INVENTOR	ATTORNEY DOCKET NO.	CONFIRMATION NO.
09/738,270	12/15/2000	Roger J. Quy	00125/002001	1635

7590 12/13/2002

Mark D. Wieczorek
P.O. Box 70072
San Diego, CA 92167

EXAMINER	
WOLFE JR, WILLIS RAY	

ART UNIT	PAPER NUMBER
3747	

DATE MAILED: 12/13/2002

Determination of Patent Term Adjustment under 35 U.S.C. 154 (b)
(application filed on or after May 29, 2000)

The patent term adjustment to date is 301 days. If the issue fee is paid on the date that is three months after the mailing date of this notice and the patent issues on the Tuesday before the date that is 28 weeks (six and a half months) after the mailing date of this notice, the term adjustment will be 301 days.

If a continued prosecution application (CPA) was filed in the above-identified application, the filing date that determines patent term adjustment is the filing date of the most recent CPA.

Applicant will be able to obtain more detailed information by accessing the Patent Application Information Retrieval (PAIR) system. (http://pair.uspto.gov)

Any questions regarding the patent term extension or adjustment determination should be directed to the Office of Patent Legal Administration at (703)305-1383.

PTOL-85 (REV. 04-02) Approved for use through 01/31/2004.

UNITED STATES PATENT AND TRADEMARK OFFICE

UNITED STATES DEPARTMENT OF COMMERCE
United States Patent and Trademark Office
Address: COMMISSIONER OF PATENTS AND TRADEMARKS
Washington, D.C. 20231
www.uspto.gov

APPLICATION NO.	FILING DATE	FIRST NAMED INVENTOR	ATTORNEY DOCKET NO.	CONFIRMATION NO.
09/738,270	12/15/2000	Roger J. Quy	00125/002001	1635

7590 12/13/2002

Mark D. Wieczorek
P.O. Box 70072
San Diego, CA 92167
UNITED STATES

EXAMINER	
WOLFE JR, WILLIS RAY	
ART UNIT	**PAPER NUMBER**
3747	

DATE MAILED: 12/13/2002

Notice of Fee Increase on January 1, 2003

If a reply to a "Notice of Allowance and Fee(s) Due" is filed in the Office on or after January 1, 2003, then the amount due will be higher than that set forth in the "Notice of Allowance and Fee(s) Due" since there will be an increase in fees effective on January 1, 2003. See Revision of Patent and Trademark Fees for Fiscal Year 2003; Final Rule, 67 Fed. Reg. 70847, 70849 (November 27, 2002).

The current fee schedule is accessible from: http://www.uspto.gov/main/howtofees.htm.

If the issue fee paid is the amount shown on the "Notice of Allowance and Fee(s) Due," but not the correct amount in view of the fee increase, a "Notice to Pay Balance of Issue Fee" will be mailed to applicant. In order to avoid processing delays associated with mailing of a "Notice to Pay Balance of Issue Fee," if the response to the Notice of Allowance and Fee(s) due form is to be filed on or after January 1, 2003 (or mailed with a certificate of mailing on or after January 1, 2003), the issue fee paid should be the fee that is required at the time the fee is paid. If the issue fee was previously paid, and the response to the "Notice of Allowance and Fee(s) Due" includes a request to apply a previously-paid issue fee to the issue fee now due, then the difference between the issue fee amount at the time the response is filed and the previously paid issue fee should be paid. See Manual of Patent Examining Procedure, Section 1308.01 (Eighth Edition, August 2001).

Questions relating to issue and publication fee payments should be directed to the Customer Service Center of the Office of Patent Publication at (703) 305-8283.

PTOL-85 (REV. 04-02) Approved for use through 01/31/2004

FACSIMILE TRANSMITTAL SHEET

TO: Examiner Willis Wolfe	FROM: Mark D. Wieczotek, PH.D., Esq.
FAX NUMBER: (703) 746-4550	DATE: February 12, 2003
COMPANY: USPTO	TOTAL NO. OF PAGES INCLUDING COVER:
PHONE NUMBER:	SENDER'S REFERENCE NUMBER: 00125/002001
RE: Resubmission of IDS	YOUR REFERENCE NUMBER: 09/738,270

☑ URGENT ☑ FOR REVIEW ☑ PLEASE COMMENT ☑ PLEASE REPLY ☐ PLEASE RECYCLE

NOTES/COMMENTS:

Examiner Wolfe,

As per our teleconference, here is the IDS and references. Let me know if you do not receive all the references. And thank you for the opportunity to resubmit this. I am also faxing a copy of the postcard, showing that the PTO did receive this the first time we sent it. Just in case your fax machine cannot accommodate all these pages, do not be surprised if this fax has to be sent in several attempts.

Thanks again,

Mark Wieczorek

MARK WIECZOREK • PO BOX 70072 • SAN DIEGO, CA 92167
PHONE: (858) 713-9519 • FAX: (866) 728-1396

Received from < > at 2/12/03 6:17:05 PM [Eastern Standard Time]

Correspondence Mailing Date: January 30, 2001 Serial No.: 09/738,270
Docket No.: 80125/002001 Filing Date: December 15, 2000
METHOD AND APPARATUS FOR HEALTH AND DISEASE MANAGEMENT COMBINING PATIENT DATA MONI-TORING WITH WIRELESS INTERNET CONNECTIVITY
Inventor: Roger J. Quy

THE ITEMS LISTED BELOW WERE RECEIVED IN THE UNITED STATES PATENT AND TRADEMARK OFFICE

Information Disclosure Statement (2 Pages)
PTO Form-1449 (4 Pages)
60 References
Return Postcard

USPTO please stamp and return to addressee on reverse side

Received from < > at 2/12/03 6:17:05 PM [Eastern Standard Time]

#9

PATENT

IN THE UNITED STATES PATENT AND TRADEMARK OFFICE

Applicant(s): Roger J. Quy	**Title:**	METHOD AND APPARATUS FOR HEALTH AND DISEASE MANAGEMENT COMBINING PATIENT DATA MONITORING WITH WIRELESS INTERNET CONNECTIVITY
Serial No.: 09/738,270	**Examiner:**	Not Yet Known
Filed: December 15, 2000	**Group Art Unit:**	Not Yet Known

INFORMATION DISCLOSURE STATEMENT

Commissioner for Patents
Washington, D.C. 20231

The following items are being submitted for this Information Disclosure Statement:

1. X Preliminary Statements

2. X FORM PTO - 1449

I hereby certify that this correspondence is being deposited with the United States Postal Service as First Class Mail in an envelope addressed to the Commissioner for Patents, Washington, D.C. 20231, on:

January 30, 2001
(Date of Deposit)

Brenda Godfrey
(Name of the Person Making the Deposit)

(Signature)

January 30, 2001
(Date of Signature)

Received from < > at 2/12/03 6:17:05 PM [Eastern Standard Time]

1. **Preliminary Statements**

Applicants cite herewith patents, publications or other information of which they are aware, which they believe may be material to the examination of this application and in respect of which there may be a duty to disclose in accordance with 37 CFR 1.56.

To the best of Applicant's knowledge, the submission of reference items C19, C20, and C21, articles from The Wall Street Journal, were published within the last three months, although the exact date of each is not known.

The filing of this information disclosure statement shall not be construed as a representation that a search has been made, an admission that the information cited is, or is considered to be, material to patentability or that no other material information exists.

The filing of this information disclosure statement shall not be construed as an admission against interest in any manner.

No fee is believed to be due with this submission as this Information Disclosure Statement is being filed within three months of the application filing date and before receipt of the first Office Action. However, if any fees are required in connection with this paper, authorization is hereby given to the Commissioner for Patents to charge the same to Deposit Account No. 50-1187.

Date: Jan. 30, 2001

Mark D. Wieczorek
Attorney for Applicant
Registration No. 37,966

5038 Saratoga Avenue
San Diego, CA 92107
Phone: (619) 223-7210
Fax: (619) 223-7210

Received from < > at 2/12/03 6:17:05 PM [Eastern Standard Time]

#9

Please type a plus sign (+) inside this box → [+]

PTO/SB/08A (10-98)
Approved for use through 10/31/98, OMB 0651-0031
Patent and Trademark Office: U.S. DEPARTMENT OF COMMERCE
Under the Paperwork Reduction Act of 1995, no persons are required to respond to a collection of information unless it contains a valid OMB control number.

Substitute for form 1449A/PTO

INFORMATION DISCLOSURE STATEMENT BY APPLICANT

(use as many sheets as necessary)

Sheet 1 of 4

Complete if Known	
Application Number	09/738,270
Filing Date	December 15, 2000
First Named Inventor	Roger J. Quy
Group Art Unit	~~Unknown~~ 3747
Examiner Name	~~Unknown~~ W. Wolfe
Attorney Docket Number	00125/002001

U.S. PATENT DOCUMENTS

Examiner Initials*	Cite No.[1]	U.S. Patent Document Number Code[2]	Kind (if known)	Name of Patentee or Applicant of Cited Document	Date of Publication of Cited document MM-DD-YYYY	Pages, Columns, Lines, Where Relevant Passages or Relevant Figures Appear
	A1	4,282,883		Yerushalmy	08-11-1981	
	A2	5,307,263		Brown	04-26-1994	
	A3	5,367,427		Langen, et al.	10-18-1994	
	A4	5,544,661		Davis, et al.	08-13-1996	
	A5	5,649,117		Tacklind, et al.	08-27-1998	
	A6	5,601,435		Quy	02-11-1997	
	A7	5,628,144		Tacklind, et al.	05-06-1997	
	A8	5,678,562		Sellers	10-21-1997	
	A9	5,704,366		Tacklind, et al.	01-06-1998	
	A10	5,724,025		Tavori	03-03-1998	
	A11	5,732,709		Tacklind, et al.	03-31-1998	
	A12	5,735,285		Albert, et al.	04-07-1998	
	A13	5,752,917		Fuchs	05-19-1998	
	A14	5,772,586		Heinonen, et al.	06-30-1998	
	A15	5,791,342		Woodard	09-11-1998	
	A16	5,933,136		Brown	08-03-1999	
	A17	5,935,060		Iliff	08-10-1999	
	A18	5,951,300		Brown	09-14-1999	
	A19	5,964,701		Asada, et al.	10-12-1999	
	A20	5,987,519		Peifer, et al.	10-16-1999	
	A21	5,997,476		Brown	12-07-1999	

FOREIGN PATENT DOCUMENTS

Exam. Initials*	Cite No.[1]	Foreign Patent Document Office[3]	Number[4]	Name of Patentee or Applicant of Cited Document	Date of Publication of Cited document MM-DD-YYYY	Pages, Columns, Lines, Where Relevant Passages or Relevant Figures Appear	T[5]
	B1	WO	WO 95/32480	Enact Products, Inc.	11-30-1995		
	B2	WO	WO 97/28736	Nokia Mobile Phones	08-14-1997		
	B3	WO	WO 97/28737	Nokia Mobile Phones	08-14-1997		
	B4	WO	WO 98/38909	Informedix, Inc.	09-11-1998		
	B5	WO	WO 99/04687	Platt, et al.	02-04-1999		
	B6	WO	WO 99/14882	Georgia Tech Research Corporation	03-25-1999		
	B7	WO	WO 99/44494	Card Guard Scientific Survival, Ltd.	09-10-1999		
	B8	WO	WO 99/46718	Healthware Corp.	09-16-1999		
	B9	WO	WO 00/38900	Fourie	06-29-2000		

Examiner Signature	Wills Wolfe	Date Considered	02/13/03

*EXAMINER: Initial if reference considered, whether or not citation is in conformance with MPEP 609. Draw line through citation if not in conformance and not considered. Include copy of this form with next communication to applicant.
[1]Unique citation designation number. [2]See attached Kinds of U.S. Patent Documents. [3]Enter Office that issued the document by the two-letter code (WIPO Standard ST.3). [4]For Japanese patent documents, the indication of the year of the reign of the Emperor must precede the serial number of the patent document. [5]Kind of document by the appropriate symbols as indicated on the document under WIPO Standard ST. 16 if possible. [6]Applicant is to place a check mark here if English language Translation is attached.

Burden Hour Statement: This form is estimated to take 2.0 hours to complete. Time will vary depending upon the needs of the individual case. Any comments on the amount of time you are required to complete this form should be sent to the Chief Information Officer, Patent and Trademark Office, Washington, DC 20231.

Received from < > at 2/12/03 6:17:05 PM [Eastern Standard Time]

Please type a plus sign (+) inside this box → [+]

PTO/SB/08A (10-96)
Approved for use through 10/31/98. OMB 0651-0031
Patent and Trademark Office: U.S./DEPARTMENT OF COMMERCE
Under the Paperwork Reduction Act of 1995, no persons are required to a collection of information unless it contains a valid OMB control number.

Substitute for form 1449A/PTO

INFORMATION DISCLOSURE STATEMENT BY APPLICANT

(use as many sheets as necessary)

Sheet 2 of 4

Complete if Known	
Application Number	09/738,270
Filing Date	December 15, 2000
First Named Inventor	Roger J. Quy
Group Art Unit	~~Unknown~~ 3747
Examiner Name	~~Unknown~~ W. WOLFE
Attorney Docket Number	00125/002001

U.S. PATENT DOCUMENTS

Examiner Initials*	Cite No.[1]	U.S. Patent Document Number	Kind Code[2] (if known)	Name of Patentee or Applicant of Cited Document	Date of Publication of Cited document MM-DD-YYYY	Pages, Columns, Lines, Where Relevant Passages or Relevant Figures Appear
	A22	6,022,315		Illiff	02-08-2000	
	A23	6,057,758		Dempsey, et al.	05-02-2000	
	A24	6,059,692		Hickman	05-09-2000	
	A25	6,083,156		Lisiecki	07-04-2000	
	A26	6,144,837		Quy	11-07-2000	

FOREIGN PATENT DOCUMENTS

Exam. Initials	Cite No.[1]	Foreign Patent Document Office[3]	Number[4]	Name of Patentee or Applicant of Cited Document	Date of Publication of Cited document MM-DD-YYYY	Pages, Columns, Lines, Where Relevant Passages or Relevant Figures Appear	T[5]
	B10	WO	WO 00/40145	Criticare Systems, Inc.	07-13-2000		
	B11	WO	WO 00/54205	AC Properties B.V.	09-14-2000		
	B12	WO	WO 00/54206	AC Properties B.V.	09-14-2000		
	B13	WO	WO 00/62662	Cardiocom	10-26-2000		

Examiner Signature	Willis Wolfe	Date Considered	02/13/03

*EXAMINER: Initial if reference considered, whether or not citation is in conformance with MPEP 609. Draw line through citation if not in conformance and not considered. Include copy of this form with next communication to applicant.
[1]Unique citation designation number. [2]See attached Kinds of U.S. Patent Documents. [3]Enter Office that issued the document by the two-letter code (WIPO Standard ST.3). [4]For Japanese patent documents, the indication of the year of the reign of the Emperor must precede the serial number of the patent document. [5]Kind of document by the appropriate symbols as indicated on the document under WIPO Standard ST. 16 if possible. [6]Applicant is to place a check mark here if English language Translation is attached.

Received from < > at 2/12/03 6:17:05 PM [Eastern Standard Time]

ours to complete. Time will vary depending upon the needs of the individual case. Any comments on ould be sent to the Chief Information Officer, Patent and Trademark Office, Washington, DC 20231.

Please type a plus sign (+) inside this box → [ ]

PTO/SB/08B (10-96)
Approved for use through 10/31/99, OMB 0651-0031
Patent and Trademark Office: U.S.DEPARTMENT OF COMMERCE
Under the Paperwork Reduction Act of 1995, no persons are required to a collection of information unless it contains a valid OMB control number.

Substitute for form 1449B/PTO

INFORMATION DISCLOSURE STATEMENT BY APPLICANT

(use as many sheets as necessary)

Sheet 3 of 4

Complete if Known	
Application Number	09/738,270
Filing Date	December 15, 2000
First Named Inventor	Roger J. Quy
Group Art Unit	~~Unknown~~ 3747
Examiner Name	~~Unknown~~ W. WOLFE
Attorney Docket Number	00126/002001

Examiner Initials*	Cite No.[1]	OTHER PRIOR ART—NON-PATENT LITERATURE DOCUMENTS Include name of the author (in CAPITAL LETTERS), title of the article (when appropriate), title of the item (book, magazine, journal, serial, symposium, catalog, etc.), date, page(s), volume-issue number(s), publisher, city and/or country where published.	T[2]
W.W.	C1	EFI Framework Draft Version 0.8 (03-June-2000); External Functionality Interface Framework; pp. 1-35; June 3, 2000	
W.W.	C2	Internet press release: New York Business Wire (Sept. 25, 2000); "MedSearch Technologies, Inc. Develops a Revolutionary Home-Care Wireless Technology Utilizing PDAs-Personal Organizers-as Patient Monitors	
W.W.	C3	Jyrki Oraskari; "Bluetooth versus WLAN IEEE 802.11x"; Helsinki University of Technology (Department of Computer Science and Engineering) November, 2000	
W.W.	C4	Jeck Smith; "Your Personal Health Buddy"; ABCNews.com; http://abcnews.go.com/sections/tech/CuttingEdge/cuttingedge990225.html; 3 pages; November 24, 2000	
W.W.	C5	"The Health Hero Communications Platform"; The Health Hero Network Online Services; http://www.hhn.com/products/index.html; 2 pages; November 24, 2000	
W.W.	C6	"Painless Blood-Glucose Monitoring"; Kumetrix Technology Overview; http://www.kumetrix.com/technology.html; 2 pages; November 24, 2000	
W.W.	C7	"Technology & Clinical Results-Simple Solutions Through Technology-Progression of Glucose Monitoring Technology"; Amira; http://www.amira.com/tech/tc_tech.htm; 2 pages; November 24, 2000	
W.W.	C8	"Wired for Wellness"; LifeChart.com; http://www.lifechart.com; 2 pages; November 24, 2000	
W.W.	C9	"About Data Critical Corporation"; Yahoo – Data Critical to Provide Mallinckrodt with Wireless Connectivity for Ventilators; http://biz.yahoo.com/prnews/001012/mo_mallinc.html; 1 page; November 24, 2000	
W.W.	C10	"Bluetooth" wireless technology-bridging the gap between computing and communication"; Bluetooth Technology; http://www.intell.com/mobile/bluetooth/; 2 pages; November 28, 2000	
W.W.	C11	"Bluetooth resource center"; "What is Bluetooth?"; palowireless.com; http://www.palowireless.com/infotooth/whatis.asp; 3 pages; November 28, 2000	
W.W.	C12	"Bluetooth Tutorial"; palowireless.com – bluetooth resource center; http://www.palowireless.com/infotooth/tutorial.asp; 4 pages; November 28, 2000	

Examiner Signature	Willis Wolfe	Date Considered	02/13/03

*EXAMINER: Initial if reference considered, whether or not citation is in conformance with MPEP 609. Draw line through citation if not in conformance and not considered. Include copy of this form with next communication to applicant.
[1]Unique citation designation number. [2]Applicant is to place a check mark here if English language Translation is attached.
Burden Hour Statement: This form is estimated to take 2.0 hours to complete. Time will vary depending upon the needs of the individual case. Any comments on the amount of time you are required to complete this form should be sent to the Chief Information Officer, Patent and Trademark Office, Washington, DC 20231. IS ADDRESS. SEND TO: Assistant Commissioner for Patents, Washington, DC 20231.

Received from < > at 2/12/03 6:17:05 PM [Eastern Standard Time]

Please type a plus sign (+) inside this box [+]

PTO/SB/08B (10-96)
Approved for use through 10/31/99, OMB 0651-0031
Patent and Trademark Office: U.S./DEPARTMENT OF COMMERCE
Under the Paperwork Reduction Act of 1995, no persons are required to a collection of information unless it contains a valid OMB control number.

Substitute for form 1449B/PTO

INFORMATION DISCLOSURE STATEMENT BY APPLICANT

(use as many sheets as necessary)

Sheet 4 of 4

Complete if Known	
Application Number	09/738,270
Filing Date	December 15, 2000
First Named Inventor	Roger J. Quy
Group Art Unit	~~Unknown~~ 3747
Examiner Name	~~Unknown~~ W. WOLFE
Attorney Docket Number	00125/002001

Examiner Initials*	Cite No.[1]	OTHER PRIOR ART—NON-PATENT LITERATURE DOCUMENTS Include name of the author (in CAPITAL LETTERS), title of the article (when appropriate), title of the item (book, magazine, journal, serial, symposium, catalog, etc.), date, page(s), volume-issue number(s), publisher, city and/or country where published.	T[2]
W.W.	C13	"Bluetooth Profiles"; palowireless.com – bluetooth resource center; http://www.palowireless.com/infotooth/tutorial/profiles.asp; 4 pages; November 28, 2000	
W.W.	C14	Nick Hunt; "BLUETOOTH VESUS 802.11"; TDK Systems; http://www.cellular.co.za/bluetooth_versus_802.htm; 4 pages; November 28, 2000	
W.W.	C15	"Bluetooth vs. Airport (802.11 Network)"; palowireless.com – bluetooth resource center; http://www.palowireless.com/infotooth/knowbase/othernetworks/15.asp; 3 pages; November 28, 2000	
W.W.	C16	"Personal Digital Assistants – A2 Anytime/Anywhere – A Weekly on Wireless Infrastructure and Data Services"; Thomas Weisel Partners (Merchant Banking); 5 pages; November 29, 2000	
W.W.	C17	Ashlee Vance; "Ericsson and Intel make Bluetooth pact"; InfoWorld.com; http://www2.infoworld.com/articles/hn/xml/00/12/04/001204hnericintel.xml?T.../printarticle.htm; 1 page; December 4, 2000	
W.W.	C18	"Personal Portable Office"; Nokia 9000il digital; http://www.noklausa.com/9000il; 4 pages; December 7, 2000	
W.W.	C19	Pui-Wing Tam, "Handspring Hopes"; Article from The Wall Street Journal; Section B (November 2000)	
W.W.	C20	Author Unknown; Articles on Phones and New Technologies; Article from The Wall Street Journal; (November 2000)	
W.W.	C21	David Pringle, "Sagem to Launch Hand-held Computer that Doubles as Top-End Mobile Phone"; Article from The Wall Street Journal; (November 2000)	

Examiner Signature	Willis Wolfe	Date Considered	02/13/03

4

*EXAMINER: Initial if reference considered, whether or not citation is in conformance with MPEP 609. Draw line through citation if not in conformance and not considered. Include copy of this form with next communication to applicant.
[1]Unique citation designation number. [2]Applicant is to place a check mark here if English language Translation is attached.
Burden Hour Statement: This form is estimated to take 2.0 hours to complete. Time will vary depending upon the needs of the individual case. Any comments on the amount of time you are required to complete this form should be sent to the Chief Information Officer, Patent and Trademark Office, Washington, DC 20231.
DO NOT SEND FEES OR COMPLETED FORMS TO THIS ADDRESS. SEND TO: Assistant Commissioner for Patents, Washington, DC 20231.

Received from < > at 2/12/03 6:17:05 PM [Eastern Standard Time]

#10

PATENT

IN THE UNITED STATES PATENT AND TRADEMARK OFFICE

Applicant:	**Title:**	**METHOD AND APPARATUS FOR HEALTH AND DISEASE MANAGEMENT COMBINING PATIENT MONITORING WITH WIRELESS INTERNET CONNECTIV..**
Roger J. Quy		
Serial No.: 09/738,270	**Examiner:**	**Wolfe, Jr., Willis Ray**
Filed: December 15, 2000	**Group Art Unit:**	**3747**

INFORMATION DISCLOSURE STATEMENT UNDER 37 CFR § 1.97 (e) (1)

Commissioner for Patents
Washington, D.C. 20231

The following items are being submitted for this Information Disclosure Statement:

1. X Preliminary Statements

2. X FORM PTO - 1449

I hereby certify that this correspondence is being deposited by facsimile addressed to the Commissioner for Patents to facsimile no. 703-872-9303 (cc: to Examiner Wolfe: 703-308-7766), on:

February 27, 2003
(Date of Deposit)

Mark D. Wieczorek
(Name of the Person Making the Deposit)

(Signature)

February 27, 2003
(Date of Signature)

Attorney Docket No. 00125/002001

1. Preliminary Statements

Applicant cites herewith patents, publications or other information of which he is aware, which he believes may be material to the examination of this application and in respect of which there may be a duty to disclose in accordance with 37 CFR 1.56.

The filing of this information disclosure statement shall not be construed as a representation that a search has been made, an admission that the information cited is, or is considered to be, material to patentability or that no other material information exists. The filing of this information disclosure statement shall not be construed as an admission against interest in any manner.

Each item of information contained in this Information Disclosure Statement was cited in a communication or search report from a foreign patent office in a counterpart foreign application not more than three (3) months prior to the filing of this Information Disclosure Statement. Said foreign communication or search report is dated February 14, 2003 and a copy of same is provided herewith in addition to the references cited therein. No late filing fee is believed to be due in connection with this submission as this Information Disclosure Statement is being filed within three (3) months of the date of the foreign search report.

However, because this filing is after the issuance of the Notice of Allowance but before the payment of the issue fee, Applicant hereby petitions the Patent Office to accept this filing pursuant 37 CFR § 1.17(p). Therefore, authorization is hereby given to the Commissioner for Patents to charge the $130.00 Petition Fee to Deposit Account No. 50-1187.

Date: Feb. 27, 2003

Mark D. Wieczorek
Attorney for Applicant
Registration No. 37,966

P.O. Box 70072
San Diego, CA 92167
Phone: (562) 244-5671
Fax: (443) 238-2678

#10

Please type a plus sign (+) inside this box → [+]

PTO/SB/08B (10-98)
Approved for use through 10/31/99, OMB 0651-0031
Patent and Trademark Office: U.S./DEPARTMENT OF COMMERCE

Under the Paperwork Reduction Act of 1995, no persons are required to a collection of information unless it contains a valid OMB control number.

Substitute for form 1449B/PTO

INFORMATION DISCLOSURE STATEMENT BY APPLICANT

(use as many sheets as necessary)

Sheet 1 of 1

Complete if Known	
Application Number	09/738,270
Filing Date	December 16, 2000
First Named Inventor	Roger J. Quy
Group Art Unit	3747
Examiner Name	Wolfe, Jr., Willis Ray
Attorney Docket Number	00125/002001

U.S. PATENT DOCUMENTS

Examiner Initials*	Cite No.[1]	U.S. Patent Document Number	Kind Code[2] (if known)	Name of Patentee or Applicant of Cited Document	Date of Publication of Cited document MM-DD-YYYY	Pages, Column, Lines, Where Relevant Passages or Relevant Figures Appear
[illegible]	A1	5,772,586		Heinonen, et al.	06/30/98	

FOREIGN PATENT DOCUMENTS

Examiner Initials*	Cite No.[1]	Foreign Patent Document Office[3]	Number[4]	Kind Code[4] (if known)	Name of Patentee or Applicant of Cited Document	Date of Publication of Cited document MM-DD-YYYY	Pages, Column, Lines, Where Relevant Passages or Relevant Figures Appear	T[5]
[illegible]	B1	WO	WO 98/24358		Enact Health Management Systems	06/11/98		
[illegible]	B2	WO	WO 99/41882		Southern Research Institute	08/19/99		

Examiner Signature	Willis Wolfe	Date Considered	2/28/03

*EXAMINER: Initial if reference considered, whether or not citation is in conformance with MPEP 609. Draw line through citation if not in conformance and not considered. Include copy of this form with next communication to applicant.
[1]Unique citation designation number. [2]Applicant is to place a check mark here if English language Translation is attached.
Burden Hour Statement: This form is estimated to take 2.0 hours to complete. Time will vary depending upon the needs of the individual case. Any comments on the amount of time you are required to complete this form should be sent to the Chief Information Officer, Patent and trademark Office, Washington, DC 20231. DO NOT SEND FEES OR COMPLETED FORMS TO THIS ADDR[illegible] for Patents, Washington, DC 20231.

5 pages

105

BP
PH 11

OIPE JC68
MAR 1 8 2003
PATENT & TRADEMARK OFFICE

PATENT

IN THE UNITED STATES PATENT AND TRADEMARK OFFICE

Applicant:	**Title: METHOD AND APPARATUS FOR HEALTH AND DISEASE MANAGEMENT COMBINING PATIENT DATA MONITORING WITH WIRELESS INTERNET CONNECTIVITY**
Roger J. Quy	
Serial No.: 09/738,270	**Examiner: Wolfe Jr., Willis Ray**
Filed: December 15, 2000	**Art Unit: 3747**

TRANSMITTAL OF FORMAL DRAWINGS TO OFFICIAL DRAFTSPERSON (RESPONSE TO NOTICE OF ALLOWABILITY)

Box: Issue Fee
Commissioner for Patents
Washington, D.C. 20231

Dear Sir:

In response to the Notice of Allowability dated December 13, 2002, attached please find two (2) corrected sheets of formal drawings.

I hereby certify that this correspondence is being deposited with the United States Postal Service as First Class Mail in an envelope addressed to the Commissioner for Patents, Washington, D.C. 20231, Box: Issue Fee, on:

March 13, 2003
(Date of Deposit)

Brenda L. Godfrey
(Name of the Person Making the Deposit)

Brenda L. Godfrey
(Signature)

March 13, 2003
(Date of Signature)

(Docket No. 00125/002001)

12/02

No fees are believed to be due in connection with this paper, however if any fees are prescribed, please charge said fees to Deposit Account No. 50-1187.

Respectfully submitted,

Dated: Feb. 18, 2003

By: _____

Mark D. Wieczorek
Attorney for Applicant
Registration No. 37,966

P.O. Box 70072
San Diego, CA 92167
Phone: (562) 244-5671
Fax: (443) 238-2678

OIPE JC
MAR 1 8 2003
PATENT & TRADEMARK OFFICE

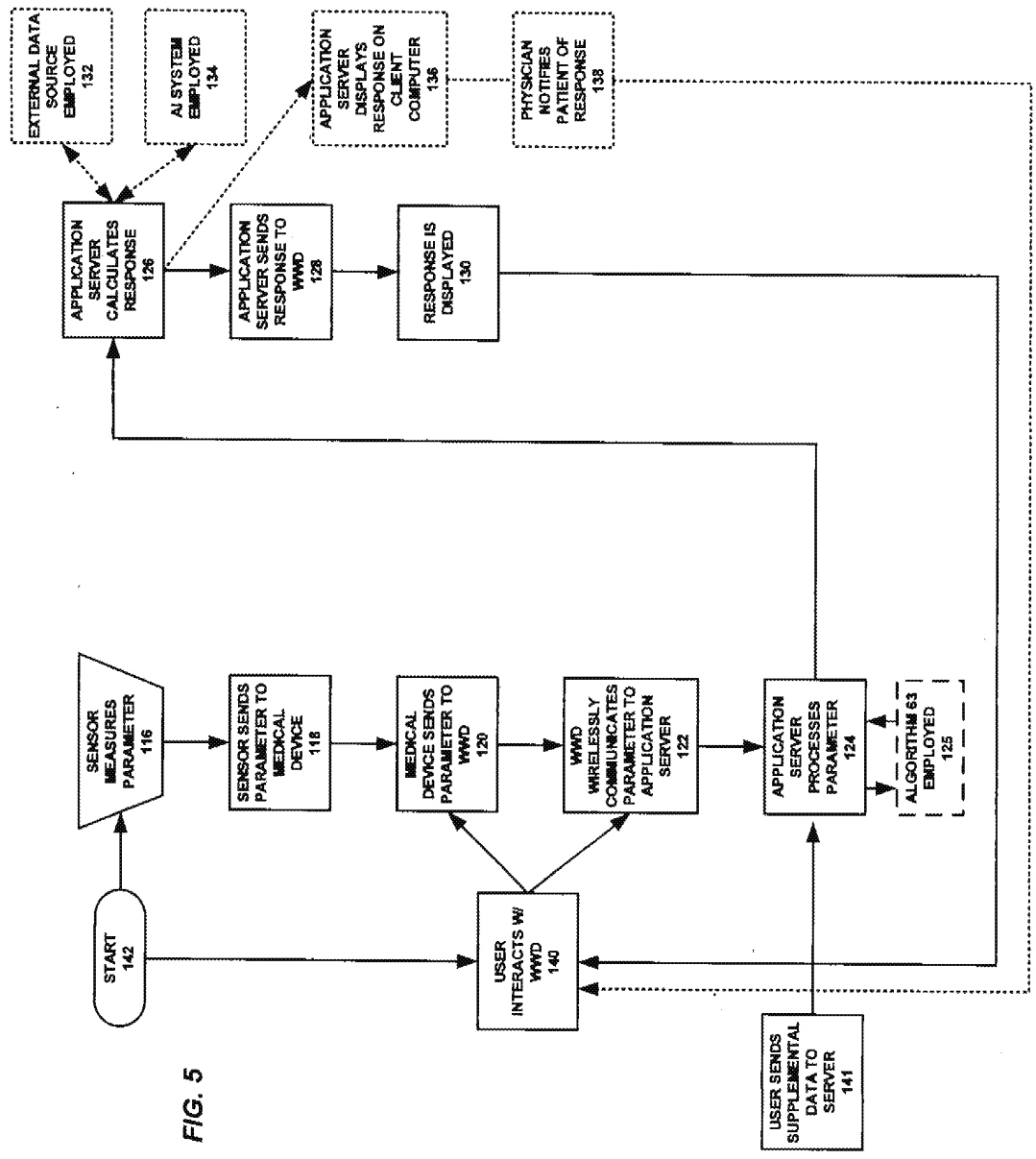

FIG. 5

OIPE JC86
MAR 1 8 2003
PATENT & TRADEMARK OFFICE

FIG. 6

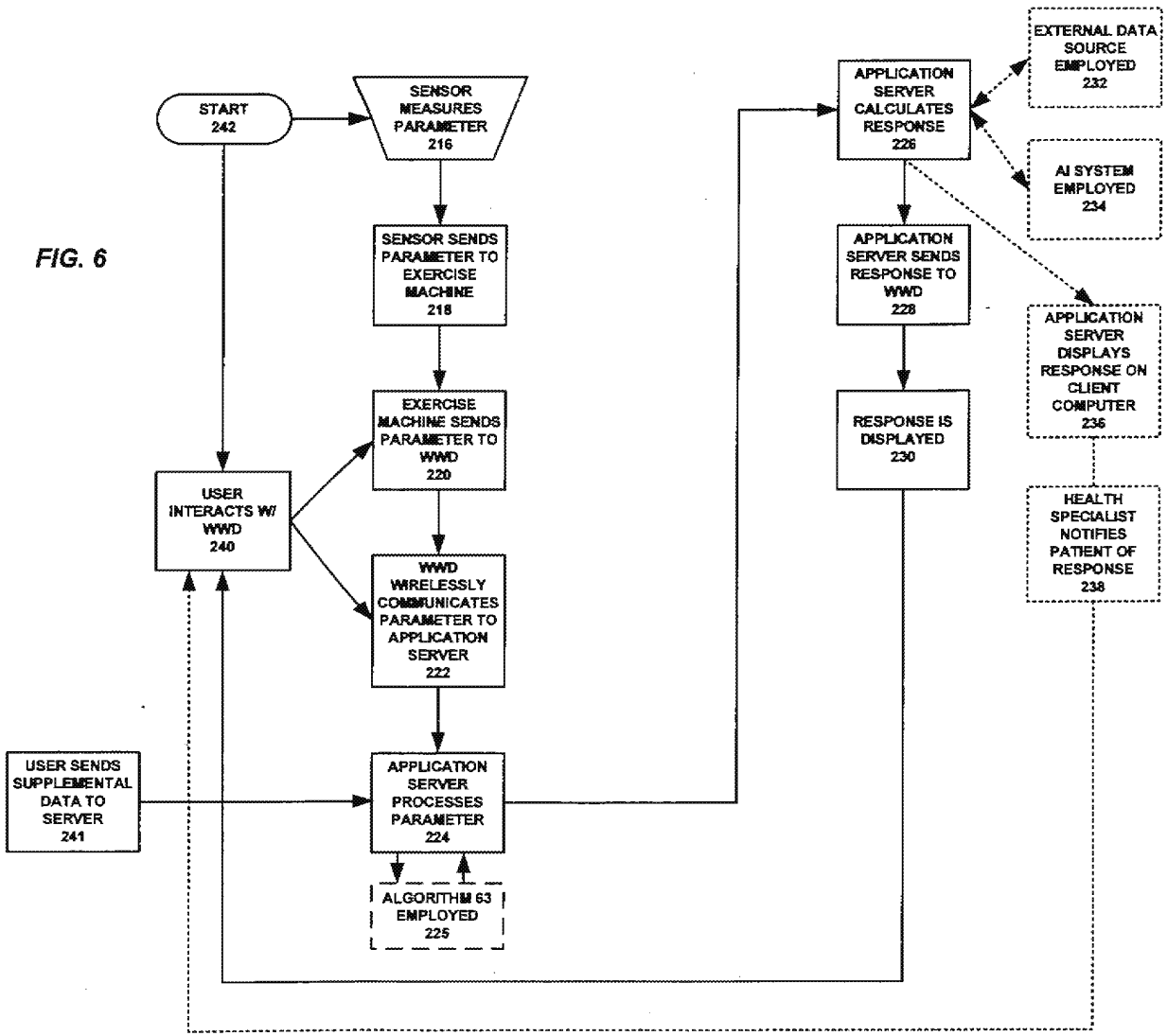

BSW

PART B - FEE(S) TRANSMITTAL

Complete and send this form, together with applicable fee(s), to: Mail Box ISSUE FEE
Commissioner for Patents
Washington, D.C. 20231
Fax (703)746-4000

INSTRUCTIONS: This form should be used for transmitting the ISSUE FEE and PUBLICATION FEE (if required). Blocks 1 through 4 should be completed where appropriate. All further correspondence including the Patent, advance orders and notification of maintenance fees will be mailed to the current correspondence address as indicated unless corrected below or directed otherwise in Block 1, by (a) specifying a new correspondence address; and/or (b) indicating a separate "FEE ADDRESS" for maintenance fee notifications.

CURRENT CORRESPONDENCE ADDRESS (Note: Legibly mark-up with any corrections or use Block 1)

7590 12/13/2002

Mark D. Wieczorek
P.O. Box 70072
San Diego, CA 92167

Note: A certificate of mailing can only be used for domestic mailings of the Fee(s) Transmittal. This certificate cannot be used for any other accompanying papers. Each additional paper, such as an assignment or formal drawing, must have its own certificate of mailing or transmission.

Certificate of Mailing or Transmission

I hereby certify that this Fee(s) Transmittal is being deposited with the United States Postal Service with sufficient postage for first class mail in an envelope addressed to the Box Issue Fee address above, or being facsimile transmitted to the USPTO, on the date indicated below.

Brenda Godfrey (Depositor's name)
(Signature)
March 12, 2003 (Date)

APPLICATION NO.	FILING DATE	FIRST NAMED INVENTOR	ATTORNEY DOCKET NO.	CONFIRMATION NO.
09/738,270	12/15/2000	Roger J. Quy	00125/002001	1635

TITLE OF INVENTION: METHOD AND APPARATUS FOR HEALTH AND DISEASE MANAGEMENT COMBINING PATIENT DATA MONITORING WITH WIRELESS INTERNET CONNECTIVITY

APPLN. TYPE	SMALL ENTITY	ISSUE FEE	PUBLICATION FEE	TOTAL FEE(S) DUE	DATE DUE
nonprovisional	YES	$640	$300	$940	03/13/2003

EXAMINER	ART UNIT	CLASS-SUBCLASS
WOLFE JR, WILLIS RAY	3747	600-300000

1. Change of correspondence address or indication of "Fee Address" (37 CFR 1.363).

☐ Change of correspondence address (or Change of Correspondence Address form PTO/SB/122) attached.

☒ "Fee Address" indication (or "Fee Address" Indication form PTO/SB/47; Rev 03-02 or more recent) attached. Use of a Customer Number is required.

2. For printing on the patent front page, list (1) the names of up to 3 registered patent attorneys or agents OR, alternatively, (2) the name of a single firm (having as a member a registered attorney or agent) and the names of up to 2 registered patent attorneys or agents. If no name is listed, no name will be printed.

1 Mark D. Wieczorek
2
3

3. ASSIGNEE NAME AND RESIDENCE DATA TO BE PRINTED ON THE PATENT (print or type)

PLEASE NOTE: Unless an assignee is identified below, no assignee data will appear on the patent. Inclusion of assignee data is only appropriate when an assignment has been previously submitted to the USPTO or is being submitted under separate cover. Completion of this form is NOT a substitute for filing an assignment.

(A) NAME OF ASSIGNEE: Q-tec Systems LLC
(B) RESIDENCE: (CITY and STATE OR COUNTRY): Wilmington, DE

Please check the appropriate assignee category or categories (will not be printed on the patent) ☐ individual ☐ corporation or other private group entity ☐ government

4a. The following fee(s) are enclosed:
☒ Issue Fee
☒ Publication Fee
☐ Advance Order - # of Copies _____

4b. Payment of Fee(s):
☐ A check in the amount of the fee(s) is enclosed.
☐ Payment by credit card. Form PTO-2038 is attached.
☐ The Commissioner is hereby authorized by charge the required fee(s), or credit any overpayment, to Deposit Account Number _____ (enclose an extra copy of this form).

Commissioner for Patents is requested to apply the Issue Fee and Publication Fee (if any) or to re-apply any previously paid issue fee to the application identified above.

(Authorized Signature) Mark D. Wieczorek (Date) Feb. 18, 2003
Mark D. Wieczorek Reg. No. 37,866

NOTE: The Issue Fee and Publication Fee (if required) will not be accepted from anyone other than the applicant; a registered attorney or agent; or the assignee or other party in interest as shown by the records of the United States Patent and Trademark Office.

03/21/2003 SHINGOS2 00000018 09738270
01 FC:2501 650.00 OP
02 FC:1504 300.00 OP

This collection of information is required by 37 CFR 1.311. The information is required to obtain or retain a benefit by the public which is to file (and by the USPTO to process) an application. Confidentiality is governed by 35 U.S.C. 122 and 37 CFR 1.14. This collection is estimated to take 12 minutes to complete, including gathering, preparing, and submitting the completed application form to the USPTO. Time will vary depending upon the individual case. Any comments on the amount of time you require to complete this form and/or suggestions for reducing this burden, should be sent to the Chief Information Officer, U.S. Patent and Trademark Office, U.S. Department of Commerce, Washington, D.C. 20231. DO NOT SEND FEES OR COMPLETED FORMS TO THIS ADDRESS. SEND TO: Commissioner for Patents, Washington, DC 20231.

Under the Paperwork Reduction Act of 1995, no persons are required to respond to a collection of information unless it displays a valid OMB control number.

TRANSMIT THIS FORM WITH FEE(S)

09/738,270 NOT CORR

Docket No.: 00125/002001

FORM PTO-1586 (Modified)
(Rev. 03-01)
OMB No. 0651-0027 (exp.5/31/2002)
P08A/REV03

OIP JC98 MAR 1 8 2003 PATENT & TRADEMARK OFFICE

RECORDATION FORM COVER SHEET

PATENTS ONLY

U.S. DEPARTMENT OF COMMERCE
Patent and Trademark Office

3

Tab settings

To the Honorable Commissioner of Patents and Trademarks: Please record the attached original documents or copy thereof.

1. Name of conveying party(ies):
Roger Quy

Additional names(s) of conveying party(ies) ☐ Yes ☒ No

2. Name and address of receiving party(ies):

COPY

Name: Q-tec Systems LLC

Address: 1220 N. Market Street, Suite 606

City: Wilmington State/Prov.: DE

Country: US ZIP: 19801

Additional name(s) & address(es) ☐ Yes ☒ No

3. Nature of conveyance:

☒ Assignment ☐ Merger

☐ Security Agreement ☐ Change of Name

☐ Other

Execution Date: March 12, 2003

4. Application number(s) or patent numbers(s):

If this document is being filed together with a new application, the execution date of the application is:

Patent Application No.	Filing date	B. Patent No.(s)
09/738,270	December 15, 2000	

Additional numbers ☐ Yes ☒ No

5. Name and address of party to whom correspondence concerning document should be mailed:

Name: Mark D. Wieczorek

Registration No. 37,966

Address: P.O. Box 70072

City: San Diego State/Prov.: CA

Country: US ZIP: 92167

6. Total number of applications and patents involved: 1

7. Total fee (37 CFR 3.41):.....$ 40.00

☒ Enclosed - Any excess or insufficiency should be credited or debited to deposit account

☐ Authorized to be charged to deposit account

8. Deposit account number:

(Attach duplicate copy of this page if paying by deposit account)

DO NOT USE THIS SPACE

9. Statement and signature.

To the best of my knowledge and belief, the foregoing information is true and correct and any attached copy is a true copy of the original document.

Mark D. Wieczorek	Mark D. Wieczorek	March 12, 2003
Name of Person Signing	Signature	Date

Total number of pages including cover sheet, attachments, and 3

Mail documents to be recorded with required cover sheet information to:
Commissioner of Patents & Trademarks, Box Assignments
Washington, D.C. 20231

Sample Form (former PTO/SB/15) (08-01)

ASSIGNMENT OF APPLICATION	Docket Number (Optional) 00125/002001

Whereas, I/We, Roger Quy of Mill Valley, CA hereafter referred to as applicant, have invented certain new and useful improvements in Method & Apparatus for Health & Disease Management Combining Patient Data Monitoring with Wireless Internet Connectivity

[X] for which an application for a United States Patent was filed on December 15, 2000
Application Number 09 / 736,270.

COPY

[ ] for which an application for a United States Patent was executed on _____, and

Whereas, Q-tac Systems LLC of Wilmington, DE herein referred to "assignee" whose mailing address is 1220 N. Market St., Suite 806, Wilmington, DE 19801 is desirous of acquiring the entire right, title and interest in the same;

Now, therefore, in consideration of the sum of five dollars ($ 5), the receipt whereof is acknowledged, and other good and valuable consideration, I/We, the applicant(s), by these presents do sell, assign and transfer unto said assignee the full and exclusive right to the said invention in the United States and the entire right, title and interest in and to any and all Patents which may be granted therefor in the United States. I/We hereby authorize and request the Commissioner of Patent and Trademarks to issue said United States Patent to said assignee, of the entire right, title, and interest in and to the same, for his sole use and behoof; and for the use and behoof of his legal representatives, to the full end of the term for which said Patent may be granted, as fully and entirely as the same would have been held by me had this assignment and sale not been made.

Executed this 12th day of March, 2003
at Sausalito.

State of California)
County of Marin)

SS: 551-91-2837

(Signature)
Roger Quy

Before me personally appeared said _____
and acknowledged the foregoing instrument to be his free act and deed this _____
day of _____, 20 ____.

Seal (Notary Public)

Note: Signatures of all the inventors or assignees of record of the entire interest or their representative(s) are required. Submit multiple forms if more than one signature is required, see below*.

* [X] Total of 1 forms are submitted.

This form offers a sample or suggested format for an assignment document. This sample form is not an OMB officially approved form.

CALIFORNIA ALL-PURPOSE ACKNOWLEDGMENT

State of California
County of Marin } ss.

On March 3, 2003 (Date) before me, Suzan McGranahan Notary Public (Name and Title of Officer (e.g., "Jane Doe, Notary Public"))

personally appeared Roger John Glynn (Name(s) of Signer(s))

☐ personally known to me
☑ proved to me on the basis of satisfactory evidence

to be the person(s) whose name(s) is/are subscribed to the within instrument and acknowledged to me that he/~~she/they~~ executed the same in his/~~her/their~~ authorized capacity(~~ies~~), and that by his/~~her/their~~ signature(s) on the instrument the person(s), or the entity upon behalf of which the person(s) acted, executed the instrument.

WITNESS my hand and official seal.

SUZAN MCGRANAHAN
Commission # 1232834
Notary Public - California
Marin County
My Comm. Expires Aug 19, 2003

Place Notary Seal Above

Signature of Notary Public

OPTIONAL

Though the information below is not required by law, it may prove valuable to persons relying on the document and could prevent fraudulent removal and reattachment of this form to another document.

Description of Attached Document
Title or Type of Document: Assignment & Application
Document Date: March 3 2003 Number of Pages: 1 + Att
Signer(s) Other Than Named Above: None

Capacity(ies) Claimed by Signer
Signer's Name: Roger John Glynn
☑ Individual
☐ Corporate Officer — Title(s):
☐ Partner — ☐ Limited ☐ General
☐ Attorney in Fact
☐ Trustee
☐ Guardian or Conservator
☐ Other:

Top of thumb here

Signer is Representing:

© 1997 National Notary Association • 9350 De Soto Ave., P.O. Box 2402 • Chatsworth, CA 91313-2402 Prod. No. 5907 Reorder: Call Toll-Free 1-800-876-6827

09/738270

COFC

#124

I hereby certify that this correspondence is being deposited on 11/9/2006 with the United States Postal Service with sufficient postage as first class mail under 37 CFR 1.8 in an envelope addressed to: Commissioner for Patents, P.O. Box 1450, Alexandria, VA 22313-1450.

OIPE IAP100 NOV 14 2006 PATENT & TRADEMARK OFFICE

Date 11/9/2006 Signature: Danielle R. Lundy

Danielle R. Lundy

IN THE UNITED STATES PATENT & TRADEMARK OFFICE

Inventor(s) : Roger J. Quy

Patent No. : 6,602,191 B2

Issue Date : August 5, 2003

Title : METHOD AND APPARATUS FOR HEALTH AND DISEASE MANAGEMENT COMBINING PATIENT DATA MONITORING WITH WIRELESS INTERNET CONNECTIVTY

Confirm. No. : 1635

Docket : 00125/002001

Certificate NOV 21 2006 of Correction

Commissioner for Patents
P.O. Box 1450
Alexandria, VA 22313-1450

SIR:

REQUEST FOR CERTIFICATE OF CORRECTION

Applicant's attorney, on behalf of the Assignee of record, hereby requests the issuance of a Certificate of Correction for the following Patent Office errors pursuant to 35 USC §254:

Correction is requested for the following Patent Office errors:

Cover Sheet, change Assignee (73) to - - Q-tec Systems LLC, Wilmington, DE (US) - -

Approval and entry of the above corrections is respectfully requested.

NOV 21 2006

While it is not believed that any additional fees are due, in the event additional amounts are due as a result of this request for certificate of correction, authorization is hereby given to charge the undersigned attorney's PTO Deposit Account #50-1047 accordingly. Also filed herewith is PTO Form 1050, duly completed.

Respectfully submitted:

Mark D. Wieczorek Reg. No. 37,966
Mayer & Williams PC
251 North Avenue West, 2nd Floor
Westfield, NJ 07090

Date: Nov. 7, 2006

Tel.: 562-244-5671
Fax: 443-238-2678

NOV 2 1 2006

Approved for use through 01/31/2004. OMB 0651-0033
U.S. Patent and Trademark Office; U.S. DEPARTMENT OF COMMERCE
Under the Paperwork Reduction Act of 1995, no persons are required to respond to a collection of information unless it displays a valid OMB control Number.
(Also Form PTO-1050)

UNITED STATES PATENT AND TRADEMARK OFFICE
CERTIFICATE OF CORRECTION

PATENT NO : 6,602,191 B2
09/738270
DATED : August 5, 2003

INVENTOR(S): Roger J. Quy

It is certified that error appears in the above-identified patent and that said Letters Patent is hereby corrected as shown below:

On Title Page, Item (73) Should Read,
~~Cover Sheet, change Assignee (73) to -~~ - Q-tec Systems LLC, Wilmington, DE (US) - - 0

20K

MAILING ADDRESS OF SENDER:
Mark D. Wieczorek Reg. No. 37,966
Mayer & Williams PC
251 North Avenue West, 2nd Floor
Westfield, NJ 07090

PATENT NO. 6,602,191 B2
No. of additional copies 0

This collection of information is required by 37 CFR 1.322, 1.323, and 1.324. The information is required to obtain or retain a benefit by the public which is to file (and by the USPTO to process) an application. Confidentiality is governed by 35 U.S.C. 122 and 37 CFR 1.14. This collection is estimated to take 1.0 hours to complete, including gathering, preparing, and submitting the completed application form to the USPTO. Time will vary depending upon the individual case. Any comments on the amount of time you require to complete the form and/or suggestions for reducing this burden, should be sent to the Chief Information Officer, U.S. Patent and Trademark Office, U.S. Department of Commerce, P.O. Box 1450, Alexandria, VA 22313-1450. DO NOT SEND FEES OR COMPLETED FORMS TO THIS ADDRESS. SEND TO: Commissioner for Patents, P.O. Box 1450, Alexandria, VA 22313-1350.

If you need assistance in completing the form, call 1-800- PTO-9199 and select option 2.

NOV 2 1 2006

UNITED STATES PATENT AND TRADEMARK OFFICE

CERTIFICATE OF CORRECTION

PATENT NO. : 6,602,191 B2
APPLICATION NO. : 09/738270
DATED : August 5, 2003
INVENTOR(S) : Roger J. Quy

It is certified that error appears in the above-identified patent and that said Letters Patent is hereby corrected as shown below:

On Title Page, Item (73) Should Read, -- Q-tec Systems LLC, Wilmington, DE (US) --

Signed and Sealed this

Thirtieth Day of January, 2007

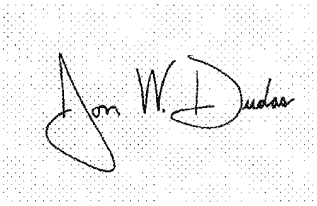

JON W. DUDAS
Director of the United States Patent and Trademark Office

PATENT APPLICATION FEE DETERMINATION RECORD
Effective October 1, 2000

Application or Docket Number: 09738270

CLAIMS AS FILED - PART I

	(Column 1)	(Column 2)
TOTAL CLAIMS	105	
FOR	NUMBER FILED	NUMBER EXTRA
TOTAL CHARGEABLE CLAIMS	105 minus 20=	* 85
INDEPENDENT CLAIMS	11 minus 3 =	* 8
MULTIPLE DEPENDENT CLAIM PRESENT		☐

* If the difference in column 1 is less than zero, enter "0" in column 2

SMALL ENTITY TYPE ☐		OR	OTHER THAN SMALL ENTITY	
RATE	FEE		RATE	FEE
BASIC FEE	355.00	OR	BASIC FEE	710.00
X$ 9=	765	OR	X$18=	1530
X40=	320	OR	X80=	640
+135=		OR	+270=	
TOTAL	1085	OR	TOTAL	

CLAIMS AS AMENDED - PART II

AMENDMENT A

	(Column 1) CLAIMS REMAINING AFTER AMENDMENT		(Column 2) HIGHEST NUMBER PREVIOUSLY PAID FOR	(Column 3) PRESENT EXTRA
Total	*	Minus	**	=
Independent	*	Minus	***	=
FIRST PRESENTATION OF MULTIPLE DEPENDENT CLAIM				☐

SMALL ENTITY		OR	OTHER THAN SMALL ENTITY	
RATE	ADDITIONAL FEE		RATE	ADDITIONAL FEE
X$ 9=		OR	X$18=	
X40=		OR	X80=	
+135=		OR	+270=	
TOTAL ADDIT. FEE		OR	TOTAL ADDIT. FEE	

AMENDMENT B

	(Column 1) CLAIMS REMAINING AFTER AMENDMENT		(Column 2) HIGHEST NUMBER PREVIOUSLY PAID FOR	(Column 3) PRESENT EXTRA
Total	*	Minus	**	=
Independent	*	Minus	***	=
FIRST PRESENTATION OF MULTIPLE DEPENDENT CLAIM				☐

RATE	ADDITIONAL FEE		RATE	ADDITIONAL FEE
X$ 9=		OR	X$18=	
X40=		OR	X80=	
+135=		OR	+270=	
TOTAL ADDIT. FEE		OR	TOTAL ADDIT. FEE	

AMENDMENT C

	(Column 1) CLAIMS REMAINING AFTER AMENDMENT		(Column 2) HIGHEST NUMBER PREVIOUSLY PAID FOR	(Column 3) PRESENT EXTRA
Total	*	Minus	**	=
Independent	*	Minus	***	=
FIRST PRESENTATION OF MULTIPLE DEPENDENT CLAIM				☐

RATE	ADDITIONAL FEE		RATE	ADDITIONAL FEE
X$ 9=		OR	X$18=	
X40=		OR	X80=	
+135=		OR	+270=	
TOTAL ADDIT. FEE		OR	TOTAL ADDIT. FEE	

** If the entry in column 1 is less than the entry in column 2, write "0" in column 3.
*** If the "Highest Number Previously Paid For" IN THIS SPACE is less than 20, enter "20."
If the "Highest Number Previously Paid For" IN THIS SPACE is less than 3, enter "3."
The "Highest Number Previously Paid For" (Total or Independent) is the highest number found in the appropriate box in column 1.

ISSUE SLIP STAPLE AREA (for additional cross references)

POSITION	INITIALS	ID NO.	DATE
FEE DETERMINATION			
O.I.P.E. CLASSIFIER		8	02/09/01
FORMALITY REVIEW	TN	870	05-30-01
RESPONSE FORMALITY REVIEW	JPR	1030	7-18-01

INDEX OF CLAIMS

✓ ..... Rejected
= ..... Allowed
— (Through numeral)... Canceled
÷ ..... Restricted
N ..... Non-elected
I ..... Interference
A ..... Appeal
O ..... Objected

Claim Final	Claim Original	Date 12 13 92
	1	=
	2	
	3	
	4	
	5	
	6	
	7	
	8	
	9	
	10	
	11	
	12	
	13	
	14	
	15	
	16	
	17	
	18	
	19	
	20	
	21	
	22	
	23	
	24	
	25	
	26	
	27	
	28	
	29	
	30	
	31	
	32	
	33	
	34	
	35	
	(36)	
	37	
	38	
	39	
	40	
	41	
	42	
	43	
	44	
	45	
	46	
	(47)	
	48	
	(49)	
	50	

Claim Final	Claim Original	Date 12 13 92
	51	=
	52	
	53	
	54	
	55	
	56	
	57	
	58	
	59	
	60	
	61	
	62	
	63	
	64	
	65	
	66	
	67	
	68	
	69	
	70	
	71	
	72	
	73	
	74	
	75	
	76	
	77	
	78	
	79	
	(80)	
	81	
	82	
	83	
	(84)	
	85	
	86	
	87	
	88	
	89	
	90	
	91	
	92	
	93	
	94	
	(95)	
	96	
	97	
	(98)	
	(99)	
	100	

Claim Final	Claim Original	Date 12 13 92
	101	=
	102	=
	103	=
	104	=
	105	=
	106	
	107	
	108	
	109	
	110	
	111	
	112	
	113	
	114	
	115	
	116	
	117	
	118	
	119	
	120	
	121	
	122	
	123	
	124	
	125	
	126	
	127	
	128	
	129	
	130	
	131	
	132	
	133	
	134	
	135	
	136	
	137	
	138	
	139	
	140	
	141	
	142	
	143	
	144	
	145	
	146	
	147	
	148	
	149	
	150	

C- 05-30-01

If more than 150 claims or 10 actions staple additional sheet here

(LEFT INSIDE)

[redacted]

SEARCHED

Class	Sub.	Date	Exmr.
600	300	12/13/02	[illegible]
	301		
	345		
	365		
	481		
	483		
	485		
	509		
	529		
607	27		
	30		
	31		
	32		
	60		
128	902		
	903		
	904		
	905		
	920		
	923		
	924		
709	204		
	205		
	230		
	239		
	245		
	246		
705	2,3		
707	6		

INTERFERENCE SEARCHED

Class	Sub.	Date	Exmr.
600	300, 301, 345	12/13/02	[illegible]
	365, 481, 483		
	485, 509, 529		
607	27		
	30-32		
	60		
128	902-905		
	920, 923, 924		
709	204, 205, 230		
	239, 245, 246		
705	2,3		
707	6		

SEARCH NOTES
(INCLUDING SEARCH STRATEGY)

CONSULTED	Date	Exmr.
K. DROESCH ON CLASS 600	12/13/02	[illegible]

(RIGHT OUTSIDE)

[redacted] providing a platform that clicked with their existing one.

From InfoWorld.com

Published at: Monday, Dec. 4, 2000 1:00 pm PT

Ericsson and Intel make Bluetooth pact

By Ashlee Vance

ERICSSON TELEPHONE AGREED to cross the pond Monday and provide a large chunk of its Bluetooth wireless technology to Intel.

Stockholm, Sweden-based Ericsson signed a licensing agreement with Intel to cover the supply of Ericsson intellectual property relating to Bluetooth technology to the chipmaker.

Bluetooth is a standard for short-distance wireless communications. It allows devices to be connected at speeds up to 1Mbps and distances of up to 10 meters. Announced in 1998, Bluetooth technology uses a small radio chip to replace cable connections in many devices, including laptops, headphones, and printers.

For example, a Bluetooth-enabled laptop could send pages wirelessly to a properly equipped printer. A Bluetooth connection could also replace the cabling now used to connect a handheld device to a PC.

Santa Clara, Calif.-based Intel looks for the deal to broaden its product offerings to OEMs in the wireless space. Intel will use hardware and software related to Ericsson's Bluetooth Core Product and software for its HOST Stack product. The Bluetooth Core Product consists of baseband software and hardware designs that help put Bluetooth technology into chips. The HOST Stack is a software component that eases communication between devices.

Ericsson teamed with U.K.-based design house ARM for the development of Bluetooth-related chipsets and other hardware designs.

Ashlee Vance is a San Francisco-based reporter at IDG News Service, an InfoWorld affiliate.

EFI Framework

Draft Version 0.8 (03-June-2000)

External Functionality Interface Framework

Disclaimer:

This document is a draft document. It is subject to change without notice.

WAP Confidential

Received from < > at 2/12/03 6:17:05 PM [Eastern Standard Time]

Contents

1. SCOPE 3

2. DOCUMENT STATUS 4

2.1 COPYRIGHT NOTICE 4
2.2 ERRATA 4
2.3 COMMENTS 4

3. REFERENCES 5

4. DEFINITIONS AND ABBREVIATIONS 6

5. PRINCIPLES AND REQUIREMENTS 8

5.1 HIGH LEVEL INTERFACE 8
5.2 CLASSES 8
5.3 CO-EXISTENCE 8
5.4 ACCESSIBILITY 10
5.5 COMPATIBILITY, NEW AND NON-WAP FUNCTIONALITY 10
5.6 SERVICE DISCOVERY 10
5.7 API DEPENDENCE 10
5.8 SECURITY AND PRIVACY 11
5.9 INTERACTION WITH THE USER 11
5.10 REFERENCES AND EXAMPLES 11

6. ARCHITECTURAL OVERVIEW 12

6.1 EFI WITHIN WAP TERMINAL 12
6.2 EFI REFERENCE ARCHITECTURE 12

7. NAMING CONVENTION 16

7.1 LAYERS 16
7.2 API 17
7.3 NAME CONVENTION 17
7.4 VENDOR-SPECIFIC NAMESPACE 19

8. WMLSCRIPT IMPLEMENTATION 20

8.1 NAMESPACE USAGE 20
8.2 CONTAINERS 20
8.3 ATTRIBUTES 22

9. WML IMPLEMENTATION 29

9.1 BEHAVIOUR OF WAP CLIENT 29
9.2 DISCONTINUOUS MODE 30
9.3 CONTEXT MANAGEMENT 30
9.4 UAPROF 30
9.5 CACHE 31

10. EFI CLASS SPECIFICATION 32

10.1 CONTENTS 32
10.2 SERVICE DEFINITION 32
10.3 GENERIC CLASS SPECIFICATION 33

11. APPENDIX A. HISTORY 35

Received from < > at 2/12/03 8:17:05 PM [Eastern Standard Time]

1. Scope

The Wireless Application Protocol (WAP) is a result of continuous work to define an industry-wide specification for developing applications that operate over wireless communication networks. The scope for the WAP Forum is to define a set of specifications to be used by service applications. The wireless market is growing very quickly, and reaching new customers and services. To enable operators and manufacturers to meet the challenges in advanced services, differentiation and fast/flexible service creation WAP Forum defines a set of protocols in transport, security, transaction, session and application layers. For additional information on the WAP architecture, please refer to "*Wireless Application Protocol Architecture Specification*" [WAPARCH].

Current trends in telecommunications enables new kinds of functionality into a wireless terminal, either through the integration of new features into the terminal or by allowing new types of devices to be connected to the terminal. It is favorable to support this development in WAP standardization as well. Access to new functionality that is available in the wireless terminal strengthens the position of WAP as a platform for advanced wireless data services.

External Functionality (EF) is a general term for components or entities with embedded applications that execute outside of WAE, and conforms to the EFI requirements. The External Functionality can be built-in, or connected to a WAP terminal. This connection can be permanent or temporary.

Within WAP Forum the External Functionality Interface Drafting Committee (EFI DC) is the body that is to specify means for promoting new external functionality to WAP specifications in order to access added services implemented in the WAP terminal.

An application environment of WAP is the place within the terminal where applications are executed, either in the form of WML pages or in the form of scripts or both. The most convenient way to facilitate the connection between the application and new functionality of the terminal is to specify new standard services that can be accessed by an application that is being executed in WAP application environment.

The External Functionality Interface (EFI) specifications in WAP provide a framework for how applications are able to access External Functionality in a uniform way through the EFI Application Interface (EFI AI).

The EFI Application Interface (EFI AI) is a high level interface that shall suit a number of different applications. Various external functions are grouped in classes that offer common functionality across different makes and versions. The EFI framework provides an extensible set of interfaces that can support new services, including the ability to query for the particular service as well as the ability to capture the functionality that is specific to the given device or software installed.

This document drafts the EFI framework. The document starts with requirements and principles the EFI Framework is built upon. Next, the conceptual architecture of EFI is presented and the terminology is introduced. The definition of the framework follows. The concept of abstract services is explained (with the template included as an appendix) together with possible solutions and implications of two major implementations: through WML and through WMLScript. Finally, the abstract notation is used to present the required set of services.

Received from < > at 2/12/03 6:17:05 PM [Eastern Standard Time]

2. Document Status

The current version of the document is a draft of the WAP EFI Group.
It MUST not be distributed outside WAP.

This document is available online in the following formats:

PDF format at http://www.wapforum.org/.

2.1 Copyright Notice

© Copyright Wireless Application Forum, Ltd., 2000. All rights reserved.

2.2 Errata

Known problems associated with this document are published at http://www.wapforum.org/.

2.3 Comments

Comments regarding this document can be submitted to WAP Forum in the manner published at http://www.wapforum.org/.

Received from < > at 2/12/03 8:17:05 PM [Eastern Standard Time]

3. References

[CACHE] "WAP Caching Model Specification", WAP Forum, 11-February-1999 http://www.wapforum.org/

[RFC2396] "RFC2396: Uniform Resource Identifiers (URI): Generic Syntax", http://www.ietf.org

[UAProf] "User Agent Profiling Specification", WAP Forum, 10-November-1999 http://www.wapforum.org/

[WAE] "Wireless Application Environment", WAP Forum, 04-November-1999 http://www.wapforum.org/

[WAPARCH] "WAP Architecture Specification, WAP Forum, 30-April-1998. http://www.wapforum.org/

[WBXML] "Binary XML Content Format Specification", WAP Forum, 04-November-1999 http://www.wapforum.org/

[WML] "Wireless markup Language Specification", WAP Forum, 04-November-1999 http://www.wapforum.org/

[WMLLib] "WMLScript Standard Libraries Specification", WAP Forum, 30-April-1998. http://www.wapforum.org/

[WMLScript] "WMLScript Language Specification", WAP Forum, 04-November-1999. http://www.wapforum.org/

[WTA] "Wireless Telephony Application Specification", WAP Forum, 08-November-1999 http://www.wapforum.org/

Received from < > at 2/12/03 6:17:05 PM [Eastern Standard Time]

4. Definitions And Abbreviations

For the purposes of this specification the following definitions and abbreviations apply.

AI (EF AI)

The EF AI is the Application Interface to the functions offered by EFI, and for accessing information about functionality available to applications.

API

Application Programmer Interface, means available for an application to access EFI functionality

Application

The executable or interpretable code that is running within the WAE environment; includes at least WMLScript applications and WML applications.

Broker (EF Broker)

The entity that exists between the EF Units and EF Classes and the EFI AI. The EF Broker maintains the list of available functionality and routes requests to the correct EF Unit or EF Class.

Class (EF Class)

A collection of EF Units that provide common functionality. The EF Class can also provide functionality that is specific to the class.

Class Agent

The active element of the class that provides functionality on the basis of EF Units.

Class Specification

The specification of the particular EF Class.

EFI

Acronym for External Functionality Interface. The term EFI is used as a word in itself to name the area described.

EFI DC

External Functionality Interface Drafting Committee

Entity (EF Entity)

The EFI view on software or hardware component of the mobile terminal that exposes some of its function for the purpose of EFI.

Gateway

WAP gateway as specified in [WAPArch].

Mobile Client - see WAP Terminal

Origin Server

The server on which a given resource resides or is to be created. Often referred to as a web server or an HTTP server.

Registry (EF Registry)

The conceptual place where information about available EF Units and EF Classes is made accessible by the EF Broker.

Service (EF Service)

The defined functionality provided by the element of EFI: EF Broker, EF Class or EF Unit.

Terminal see "WAP Terminal"

Received from < > at 2/12/03 6:17:05 PM [Eastern Standard Time]

UAProf

User Agent Profiling, the method defined within WAP to communicate selected properties of the user agent back to the gateway and to the origin server.

Unit (EF Unit)

The conceptual object that resides in or outside the WAP terminal and provides access to the EF Services on the basis of EF Entities.

User Agent

Part of the WAP terminal that is responsible for handling the WAP-specific functionality.

WAE

Wireless Application Environment

WAP Terminal

The physical unit where the WAE executes

WMLScript

Lightweight scripting language specified in WAP for programming a mobile device. [WMLScript]

Received from < > at 2/12/03 6:17:05 PM [Eastern Standard Time]

5. Principles and requirements

Following is the list of principles the EFI is built upon. These can be also read as requirements the EFI Framework imposes on every compatible implementation.

For each principle the list of derived requirements is provided together with the explanation of how the particular requirement should be met by the compatible implementation.

5.1 High level interface

EFI must supports access at a high-level to functionality defined for classes of devices while defining an application-independent interface. The EFI service should abstract the functionality at the high level. Consequently, the EFI service must not provide functionality that is relevant to

- physical interfaces used to interface any extension or device
- internal structure of any add-on device or the extension

The service should attempt to abstract the functionality of a given class, regardless of its implementation or structure. When there is only one known or foreseeable set of functions of this type, the service may simply abstract the functionality of such set.

5.2 Classes

EFI should be able to identify and offer a common high-level abstraction functionality that spans across several different devices that provide similar functionality.

EFI in its attempt to capture the characteristics that is common to the possibly wide area of external functionality uses the phrase 'class' to describe the group of functions, devices or extensions that share the same functionality from an application point of view, regardless of technology or physical implementation.

The single class is defined through its major functionality that should identify the functionality that is fundamental for an application within its class. For example, the major functionality can be defined as 'value' for payment and value transfer class or as 'position' for positioning class.

There can be an additional functionality included in the scope of the class, that is tightly bound and naturally extends the primary functionality. For example, the concept of positioning can be extended by the concept of map service (which is in fact yet another variant of position reporting). Similarly, the concept of payment can be extended by concepts relevant to balance checking or transaction log, if necessary.

The physical device that represents more that one functionality according to the EFI classification may be shared by different EFI classes. Within each class the device should expose the part of its functionality that is specific to the class. For example, the GPS clock can be used by the 'positioning' class as well as by the 'calendar' class.

WAP Forum defines the initial set of classes. The EFI class must follow the classification provided by WAP Forum.

5.3 Co-existence

EFI Framework defines rules that allows EFI services to share the platform with other services provided through other software components. Specifically, EFI Framework defines strict rules of co-existence with WAP-specific modules, namely WAE user agent.

EFI user agent must share the platform resources with other user agent as well as with non-WAP applications that are running on the platform (e.g. generic telephony applications). Following is the list of detailed requirements that must be fulfilled by EFI.

Received from < > at 2/12/03 6:17:05 PM [Eastern Standard Time]

5.3.1 Interrupts

The call to EFI service is always visible from the caller perspective as the uninterruptible sequence of calculations. Specifically, the caller is always suspended until the call to the EFI service terminates.

The EFI service may be designed in a way that it either suspends the caller activity for the whole operation to be performed (i.e. the service is executed in the single call) or the call simply initiates the service and returns the control to the caller. Such behavior is specific to each service and is specified with the service definition. The EFI Framework allows for both types of services to be offered.

The EFI service must be implemented in a way so that it is possible to interrupt it by events that are coming from user agents or from other applications. Specifically, if the execution of certain service may take significant amount of time or other terminal resources, the implementor should take care to support other applications running possibly in parallel.

The EFI Framework does not specify any particular requirements on the maximum duration of the non-interruptible state of the EFI service, if such state is required at all. The EFI Framework does not define any particular method to resolve possible conflicts between interrupts coming from different sources.

5.3.2 Re-entrancy

The EFI service may be implemented as an ordinary or re-entrant one. In the first case the implementation must allow for several invocations of the same service even if the previous invocation has not completed yet, e.g. to re-enter the same service as a result of the WTA event interrupt. If the service is implemented as re-entrant, it should entirely separate contexts of its instances entered by different callers at the same time.

The Framework does not mandate all the services to be implemented in the re-entrant way, but it allows services to return the diagnostic notification if the particular service cannot be executed because of re-entrance. The re-entrance is implemented as per-service and per-invocation feature. If the service does not support re-entrance by design or if for some reasons it cannot handle the given invocation as re-entrant, it should clearly and immediately communicate it back to the caller.

Note that some EFI services must be implemented as re-entrant. This is generally applicable to discovery services, i.e. services that deal with information that is always available handy from EFI. Those services must be available all the time, even if more than one application wants to access them

5.3.3 EFI and WAE

The EFI Framework currently supports the synchronous master-slave call model. Within this model the caller (whether the WMLScript or the WML card) is always positioned as master. The caller calls the service while the service has no means to call back the caller or generate any action to capture its attention.

The calling application suspends its activity while calling the service and awaits the call to complete. If there is a time-out specified as a parameters of the service, the implementation of this service must take care of time monitoring and proper termination. Note that the completion of the call does not necessary mean the completion of the service.

5.3.4 EFI and WTA

The EFI service has no means to call WTAI functions. The implementation of WTAI function has no means to call the EFI function. The script that is selected as the WTA event handler may call EFI services through the appropriate API.

As a result, the WTA may call EFI service within its event handing as any other function. Specifically, the WTA may call EFI service from the event handling that has interrupted the same or another EFI service. This case is implementation-dependent and the result depends on whether the EFI function has been designed in an re-entrant fashion. The caller (the WTA script) should be prepared to both re-entrant and non-re-entrant implementations.

Received from < > at 2/12/03 6:17:05 PM [Eastern Standard Time]

5.3.5 EFI and non-WAP applications

EFI is designed to be accessible from within WAE. Applications that are not executed within the scope of WAE (specifically non-WAP applications) do not have an access to EFI through interfaces defined by the Framework. This not precludes the ability of a particular implementation to make part of the EFI implementation available to non-WAP applications. Such arrangement is not within the scope of EFI.

The non-WAP application can interrupt EFI service at any time only if its context is independent from the context of the EFI service and if it does not influence the execution of the EFI service. Such interruption should be correctly handled by the implementation.

5.4 Accessibility

Services provided by external functionality should appear to the application that makes use of EFI to be under exclusive control of the WAP application, at least while they are used by an application through the EFI interface.

The EFI service may use the physical device or part of the software that is shared by other services or by other components of the client terminal. It is up to the implementation to resolve possible conflicts arising from such access. EFI assumes that it is the only controller of the unit. If the device or the software implement concepts that allow for multiple access (e.g. channels), the implementation may use them. If there is a need for the user assistance, it is up to the implementation to provide it.

5.5 Compatibility, new and non-WAP functionality

EFI Framework provides means to simply upgrade and extent EFI functionality without significant changes to components of WAP other than possibly the mobile client. Specifically, EFI Framework defines methods for new functionality to be reachable from the WAP application without changing the WAP gateway.

EFI should attempt to provide backward compatibility of the class. EFI should provide means to determine the version of the class that is implemented.

EFI provides a flexible method to access new functionality or functionality that is present in the device but is not standardized under WAP (non-WAP functionality). The EFI Framework supports external applications and devices, which are not foreseen at this moment.

An access to non-WAP functionality does not replace the regular access through high-level functions associated with classes but it is rather used to complement it in cases where the application is able and willing to use proprietary features of the unit.

5.6 Service discovery

EFI architecture should provide WAP applications the capacity to dynamically recognize the availability of EFI compatible devices that are accessible to the application. Furthermore, EFI must also support a means of querying to discover the services offered by the device and the parameters required for those services.

EFI Framework should enable the modularity of services so that only some groups of services and only some services may be implemented in the mobile client. EFI should allow for services that are mandatory for the given class, service that are optional for the class and services that are out of the scope of the class.

5.7 API dependence

EFI should provide an access method to external functionality from WAP applications, using the WAE user agent. EFI should define its interfaces towards WAP applications in a manner that is dependent to the application programming interface (API) in use, taking into account various properties of available API. The specification of the service should include the reference to the API that is used to access the service.

Received from < > at 2/12/03 6:17:05 PM [Eastern Standard Time]

EFI Framework should demonstrate at least the implementation in WML or WMLScript for services that are defined by the Framework. The given service is bound to the given API and the call to such service is always presented in terms of the selected API.

5.8 Security and Privacy

EFI Framework should mandate and enforce rules that protects the user from harm that may be caused by the improper behavior of decks that are loaded from the network. EFI currently must not assume that the given deck or script is trusted.

In order to prevent users from possibly harmful scripts, the implementation of EFI service must seek user permission to execute any functionality that may be possibly harmful, may cause legally binding obligation or otherwise may violate or restrict user's rights. This includes, but is not restricted to, the initiation of payment transaction, delivery of secret information (e.g. PIN) or disclosure of information regarded private (e.g. current location). For each service the specification of the class must define whether it is harmful or not.

The implementation may implement different means to obtain user permission, including solutions where the permission is sought each time the service is called and solutions where the user is able to provide permission for some or all services, whether for the purpose of EFI only or combined with other functions of the mobile client (e.g. single PIN entry).

5.9 Interaction with the user

The implementation of EFI service may require the interaction with the user. Such interaction can be handled either by the WAE environment (e.g. a browser) or directly by the implementation of the service.

When the EFI service interacts with the user, the user should be clearly informed that it is the EFI service that the user interacts with, regardless of the interaction method. Specifically, it must be possible by the user to distinguish at any time between the dialogue originated by the EFI service and by the WAE application through other means.

5.10 References and examples

The definition of EFI class or service may be created for the given reference EF entity if the EF entity represents the typical characteristics of EF entities within its class.

The description of the EFI service may provide examples that refer to the particular EF entity. Those examples are not mandatory and do not bind the implementor.

Received from < > at 2/12/03 6:17:05 PM [Eastern Standard Time]

6. Architectural Overview

The conceptual architecture of EFI consists of several blocks that are collectivaly called 'EFI'. This chapter defines how the 'EFI relates to other components that may reside in the WAP terminal from the perspective of application execution environment and how the EFI component can be further conceptually structured.

6.1 EFI within WAP terminal

An application environment within the WAP mobile client (wireless terminal) consists of several components of which EFI is one. The simplified relationship of those components is depicted below.

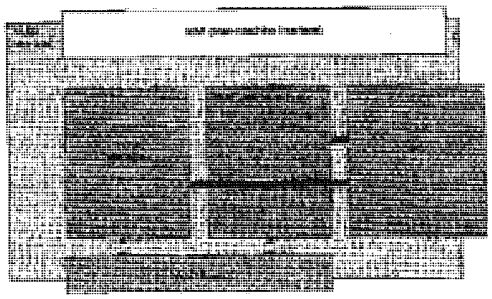

Figure 1. EFI Architectural Overview

EFI is positioned as the component that interacts with WAE user agent, similar to WTA. Generally, EFI should be considered equivalent to WTAI public functions in its position towards WAE.

EFI has the same rights to use man-machine interface (MMI) and communication capabilities as WTA or WAE. However, EFI Framework does not provide any formal description of how EFI is using those capabilities, leaving it to implementation of particular components that constitute EFI.

The primary purpose of EFI is to provide access to external functionality. The functionality is considered 'external' when it is not the standard functionality of WAE or WTA. It is irrelevant whether such functionality resides in the terminal or outside of it or whether such functionality is permanently available or only temporary present.

6.2 EFI Reference Architecture

The framework defines the conceptual reference architecture, as depicted below. The reference architecture does not imply or endorse any particular implementation but demonstrates the structure of EFI as perceived by the application developer.

Received from < > at 2/12/03 6:17:05 PM [Eastern Standard Time]

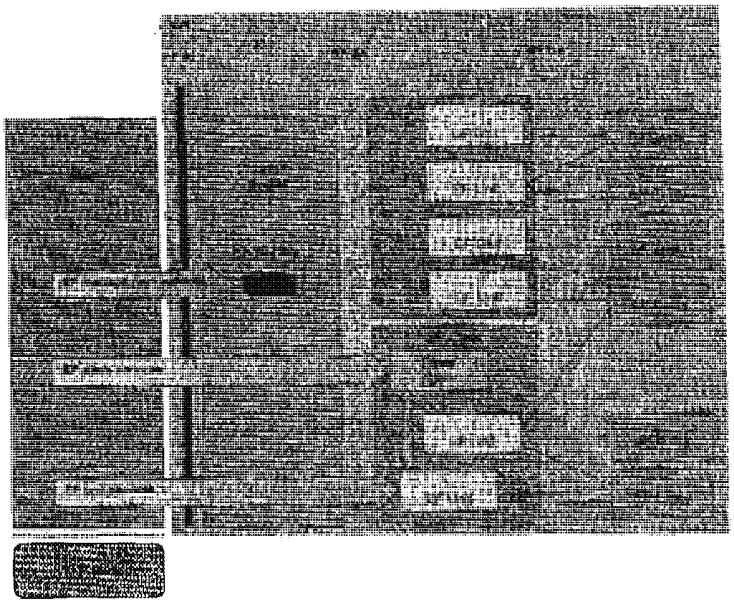

Figure 2. EFI conceptual architecture.

6.2.1 Components

The conceptual architecture of EFI identifies several components. Following is the description of those components that fall into EFI scope. The description is provided from the rightmost components shown on the picture, which is also the most detailed one.

6.2.1.1 EF Entity

The EF Entity is an entity that implements a functionality. This can be an entity that is internal or external to the WAP Terminal or even a set of software modules that provide a functionality that should be made available to applications in WAE. The EF Entity can be possibly functionally larger than what is seen through the EFI Interfaces with only part of the overall EFE functionality is exposed within EFI.

The term 'external' need not be interpreted in a physical sense. The EF Entity may physically reside on the WAP Terminal. 'External' means that the EF Entity need not be specified as part of WAP or may exist outside the WAE. This is if only a subset of the actual device functionality is published through EFI. The EF Entities are allowed, and probably expected, to be proprietary implementations. The EF Entity is not part of WAE or the WAP standardization effort.

Examples of EF Entities can be GPS, thermometers, VCRs, Cameras, measuring units, navigation systems, SIM Toolkit Applications, Smart Card Readers etc.

Received from < > at 2/12/03 6:17:05 PM [Eastern Standard Time]

6.2.1.2 EF Unit

An EF Unit is an abstraction of EF Entity functionality. The EF Unit is regarded as the component that actually provides services to the application. The sets of services that are reachable through the EF Unit are mapped to functionality available from EF Entities in an implementation-specific way.

Note that one EF Unit may build its functionality on one or more EF Entity components. Also one EF Entity may deliver its functionality to more that one EF Unit, whether they are from the same class or from different classes.

Each EF Unit belongs to exactly one of the specified EF Classes. The EF Class defines services that the EF Unit must provide to the application. A simple example of an EF Class could be thermometer where the minimal set of EF Services could consist of setUnit and getTemperature.

6.2.1.3 EF Class and Class Agent

The EF Class defines EF Units that provide the same services even if they are implemented in a different way, assuming that those services are common to certain application area.. An EF Unit always belongs to an EF Class. If the particular EF Unit does not fall into any specific EF Class, it is defined as apart of the generic EFI Class of no name.

The EF Class may provide the Class Agent that aggregate functions of particular units within the class and presents them as class-specific services to the application.

It is possible to add EF Units that provide only services that are already standardized or are specific to the EF Unit without any standardization. Addition of new classes will always require some standardization effort.

6.2.1.4 EF Broker and EF Repository

The role of the EF Broker is to collect information about available classes, units and services in EF Repository and subsequently to route service requests to most appropriate components. Note that EF Broker is able to handle some of the services by itself.

6.2.1.5 EF Service

The EF Service is the EFI-related functionality that is available to the application through the EF-AI interface. EF Services are provided by three different components of EFI.

The EF Unit provides for applications a set of EF Services that are built from functionality delivered by EF Entities. The exact definition of required and optional EF Services are provided by the description of the given EF Class. The EF Unit may provide more services than defined by its EF Class, but at least services that are defined by the EF Class as mandatory must be provided by each EF Unit that belongs to the given class.

The EF Class provides through its Class Agent services that allows applications to access functionality that is specific to the EF Class yet going beyond the scope of the single EF Unit. Each EF Class can define its own class services as long as they fulfill obligations expressed in the EFI Framework.

The EFI Broker provides EF Services that are allows the application to discover classes, units and services that are available within the given implementation of EFI, including various parameters assigned to those EFI components.

6.2.2 Interfaces

The conceptual model of the EFI architecture defines several interfaces. None of those interfaces (except for EFI-AI) is required by any implementation and only the EFI-AI interface falls into the scope of EFI DC.. They are used throughout this document to illustrate concepts and to establish the common terminology.

6.2.2.1 EF AI

The EF AI is the Application Interface to the EF Services offered by all components of EFI. Specifically, the AI provides access to services provided by EF Units. The EFI Broker exposes the EF AI to WAE. This is the only interface specified by the EFI DC.

Received from < > at 2/12/03 6:17:05 PM [Eastern Standard Time]

6.2.2.2 Other interfaces

The EF SA is the Service Access Interface. This is where Service Discovery is defined and implemented. This interface identifies the place how the EFI Broker interacts with the EF Units for providing access to them. This interface is not within the scope of the EFI.

The EF DA is the Device Access interface that exists between the EF Unit and the EF Entity. This interface is outside the scope of EFI.

6.2.3 Services

The EFI Framework makes distinction between different groups of services that are provided through EF AI. The purpose of those groups of services is defined below and then summarized in the table.

- Management services are provided by the EF Broker in order to access EF Registry. Such services are used to discover existing components of EFI, including classes, units and services. EFI Framework defines all the management services.
- Class services are defined for the class by its Class Agent and provide either unit management within the class or may provide added value services on top of services already defined by units. EFI Framework defines some class services, allowing more services to be defined by the specification of the class.
- Unit services are the set of services that the unit should implement in order to fulfill the specification of the class. A class definition could contain both mandatory and optional services. Mandatory unit services must be implemented by every unit of a given class. Optional unit services may be implemented by the unit, but the unit must not use the name of the optional service for any other purpose. The definition of unit services is provided by the class specification.
- Non-WAP services allow access to the specific functionality within the unit beyond unit services. EFI Framework defines the method to identify and access such services but makes no provision whether any such service exists or what function should it provide. The definition of such services is at the discretion of the implementor of the particular EF Unit.

The following table summarizes the grouping of services.

Name	Provided by	Defined by
Management	EF Broker	Framework
Class	EF Class	Framework and class specification
Unit	EF Unit	Class specification
non-WAP	EF Unit	outside WAP

6.2.4 API

Services that are available from EFI can be accessed through different API to accommodate the diversity of means that can be used to express the application logic. Specifically, EFI services are accessible through WMLScript API and WML API. Calls to the service through any API are routed to EFI Broker implementation that may in turn route them to EF Unit, EF Class or handle them internally.

If an application has access to more than one API (e.g. has access to both WML and WMLScript APIs), it can freely interleave interaction through all the available interfaces but it should be aware of the possible interaction of services.

Received from < > at 2/12/03 6:17:05 PM [Eastern Standard Time]

7. Naming convention

EFI makes intensive use of the concept of 'namespace', the structured space of objects that can be identified by their names. The EFI namespace is used to identify objects that are the targets of some EF services. The namespace is also used to access services through some of the APIs. Note that all the EFI components are identifiable through the namespace even though not all the EFI services can be expressed through it.

The namespace that is used by EFI is built as a hierarchical, tree-like structure. When the namespace is expressed as a string, it is compliant with [RFC2396].

The part of the structure that is fully defined by EFI Framework contains of up to four levels. EFI Framework makes also provision for parts of the namespace that can be specific to particular vendors. Such parts allows for an arbitrary number of levels.

Following is the description of those levels. The picture graphically demonstrates the levels as well as the sample namespace. Note that names that are used on the picture are for demonstration purposes only. The example depicted below is used throughout the chapter.

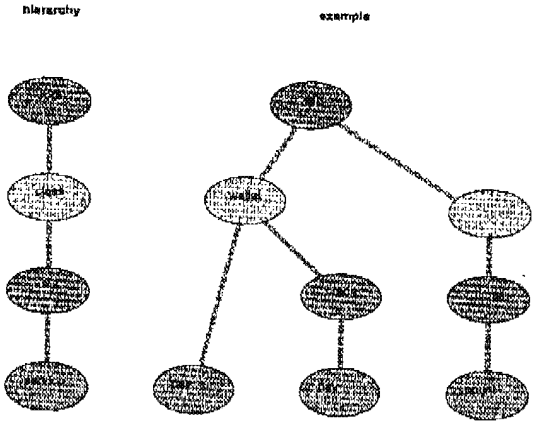

Figure 3. The hierarchy of namespace

7.1 Layers

The four layers of the namespace are defined as follows. Note that it is not necessary for all the layers to be present in each valid name.

7.1.1 Root

The root is the fixed component of each name that belongs to the EFI namespace. The root element identifies the name as belonging to the EFI namespace. If it does not lead to ambiguity, the root component can be left empty.

In the example, the root is named 'efi' and is the only element on the root level.

Received from < > at 2/12/03 6:17:05 PM [Eastern Standard Time]

7.1.2 Class

The class element defines the class that is used by the application to reach the particular unit. The generic class is identified as a class without any name.

The example shows only one element on class layer, named 'wallet', and the generic class.

Names of classes are defined by WAP. The generic class is already defined as a class with no name. The name 'vnd' is reserved and cannot be used to identify the class.

7.1.3 Unit

The unit element is used when the application wants to distinguish between different units, either within the class or out of the context of the class (e.g. to access non-WAP functions)

The example shows two elements on the unit level, 'credit' and 'timer'.

The identifier of the unit can be defined for some units or it can be generated dynamically. In the latter case the identifier of the unit cannot be known to the application in advance so that the application must query EFI for unit identifiers.

Automatic identifiers of units are considered to be typical solution while static identifiers are reserved for some well-known names within the scope of the given class.

Name, version, manufacturer and other descriptive attributes of the unit can be queried by an application in order to identify the proper unit.

7.1.4 Service

The service element is used to specify the service that should be invoked. The service layer is used when the purpose of the name is to identify the service, otherwise it is not present.

The example shows three elements at the service layer, 'pay' (twice) and 'count'. Note that the element 'pay' can be used to identify two different objects depending on the complete name.

7.2 API

The namespace is an abstract concept that can be used differently by different APIs. Specifically, WML and WMLScript APIs may make use of the namespace in the different way. The mapping between the concept of the namespace and the access provided by the particular API is provided together with other aspects of API mapping.

7.3 Name convention

When the name of an object is expressed as a string, the following convention applies. EFI name is identified through the URI scheme that is compatible with [RFC2396]. All the necessary escape convention is also drawn form the [RFC2396].

The URI scheme, as defined below, makes use of the following notation:

- < > Angle brackets denotes a non-terminal element
- [ ] Square brackets denote an optional section.
- | Vertical bar denotes a pair of mutually exclusive options
- ( )* Repeat none or multiple times
- *( ) Repeat one or multiple times

Following is the description of all the non-terminal elements.

Received from < > at 2/12/03 6:17:05 PM [Eastern Standard Time]

<class>	Name of the EFI class, identifying the class object in the namespace.
<unit>	Name of the EFI unit, identify the unit object within the namespace.
<service>	Name of the service within specific object.
<name>	Name of the parameter that is supplied to the service
<value>	Value of the parameter that is supplied to the service

The URI scheme that identifies EFI objects or invokes EF services uses the following notation.

```
[efi:][/[<class>][.[<unit>]][/<service>[?<name>=<value>(&<name>=<value>)*]]]
```

7.3.1 EFI Objects

Following is the simplified explanation of notations as they are used to identify different objects within EFI.

7.3.1.1 EF Broker

```
efi:
```

This notation identifies the EF Broker itself. This notation can also be used to refer to EFI as a whole (all EFI components together) depending on the context. Note that this component can be entirely omitted if this does not lead to ambiguity.

7.3.1.2 EF Class

```
[efi:]/[<class>]
```

This notation identifies EF Class as an individual object. The class name must be supplied unless it is the generic class. The 'efi:' component can be omitted if it does not lead to ambiguity. Depending on context, this name refers to the class as a collection of units or to the functionality provided by the class agent.

7.3.1.3 EF Unit

```
[efi:]/[<class>].[<unit>]
```

This notation identifies the EF Unit. If the unit belongs to the defined class, the name of the class must be supplied. If the unit belongs to the generic class, the name of the class can be omitted, but the dot before the name of the unit must be preserved. The name of the unit can be omitted if this is the default unit within the class (even if it is the generic class). The 'efi:' component can be omitted if it does not lead to ambiguity.

7.3.1.4 EF Service

```
[efi:]/[<class>][.[<unit>]]/<service>
```

This notation identifies the EF Service, as provided by different EFI components. If the service is provided by EF Broker, both the class and the unit names can be omitted, including the separating dot. If the service is provided by the class, the name of the unit together with the leading dot can be omitted. If the service is provided by the default unit within the class, the name of the can be omitted, but the name of the class and the dot should be supplied. If the service is provided by the unit that belongs to the generic class, the name of the class should be omitted. Finally, if the service is provided by the specified unit within the class, the name of the class and the identifier of the unit should be supplied, together with the separating dot. The 'efi:' component can be omitted if it does not lead to ambiguity.

Examples:

Received from < > at 2/12/03 6:17:05 PM [Eastern Standard Time]

efi://property	service 'property' of EF Broker
efi:/./run	service 'run' of default unit within generic class
/.aleph/picture	service 'picture' of unit 'aleph' in generic class
efi:/wallet/select	service 'select' of class 'wallet'
efi:/wallet./pay	service 'pay' of default unit in class 'wallet'
efi:/agent.007/license	service 'license' of unit '007' in class 'agent'

Note that this notation identifies the service as an object. It can be used to invoke the service (i.e. it is identical with the notation used to invoke the service) only if the service needs no parameters.

7.3.2 Initialisation of services

The name convention can be used to initialize services, which may be useful on some APIs. The URL scheme that is used to initiate the service uses the following notation.

```
[efi:]/[<class>][.[<unit>]]/<service>[?<name>=<value>(&<name>=<value>)*]
```

Some API may provide alternative or additional methods to initiate services.

All the comments provided in the previous chapter applies.

7.4 Vendor-specific namespace

EFI Framework makes provision for the part of namespace that is designed for services that are specific to vendors. Such solution allows vendors to experiment and introduce functionality that is not standardized within WAP, yet that can be accessed through EFI mechanisms.

For this purpose, EFI reserves name 'vnd' at the class level to identify the branch of the namespace. The vendor should use its own name as the identifier at the unit level. EFI Framework requires this name to be unique. The vendor can freely define the part of the name at the service level.

If the vendor-specific name is expressed as a string, it takes on the following format:

```
efi:/vnd.<vendor>[/<specific>[?<name>=<value>(&<name>=<value>)*]]
```

Following is the description of all the non-terminal elements.

<vendor>	The unique name of the vendor
<specific>	Part of the name that can be defined by the vendor, may include slash '/' characters
<name>	Name of the parameter that is supplied to the service
<value>	Value of the parameter that is supplied to the service

The vendor-specific part of the namespace does not provide notation for 'default unit'.

EFI Framework reserves the name 'vnd' to be used exclusively to identify the vendor-specific namespace. This name cannot be used for any class.

EFI does provide certain support for the vendor-specific namespace. Specifically:

- If the given implementation supports vendor namespace, 'vnd' is listed as one of available classes.
- Within the 'vnd' class, EFI supports identification of vendor names and the selection of vendor.
- EFI does not support identification of vendor-specific part of the name

Received from < > at 2/12/03 6:17:05 PM [Eastern Standard Time]

8. WMLScript Implementation

Within the WMLScript implementation, EFI is implemented as the script library. All services are accessed either through dedicated functions or by passing the name of an object/service to one of the service handling functions.

8.1 Namespace usage

The WMLScript API makes use of the namespace in the following manner.

- The root element becomes the name of the script library, in capital letters, 'EFI'. If the name is used to identify the object within the namespace, the 'efi:' component can be omitted from the name. However, the library should also correctly identify the object if the leading 'efi:' is present.
- All management services are referred to as names of functions in the library.
- Class services that are defined by Framework are referred to as names of functions in the library.
- Services that are defined for the class or for the unit are accessible through generic service calling function.
- Synchronous service is implemented as a simple function call, whether dedicated to the service or generic. Asynchronous services are implemented through a group of functions.
- There is a concept of container that is used to pass parameters to and from the function. The container holds the named values, whereas names are derived from the name of services.

8.2 Containers

The WMLScript API makes intensive use of the concept of container. The container is the structure that is capable of storing several named values.

Due to the inability of WMLScript to handle such structures directly, EFI library provides few functions that allows applications to simplify the usage of containers.

The type of container is identical with the type of String. Specifically, an empty container is equivalent to the empty string. All variables that may hold strings are also capable of holding containers.

The internal structure of strings that holds containers is specific to the implementation and is not defined by the Framework.

The library defines a set of functions to handle containers. These are not EFI services, but should be considered text-manipulation functions that are placed in the EFI library for convenience.

8.2.1 Count

Identifies the number of name/value pairs in the container.

FUNCTION:	[redacted]
FUNCTION ID:	t.b.d.
DESCRIPTION:	Returns the number of name/value pairs in the given container.
PARAMETERS:	*container* The container that is being examined

Received from < > at 2/12/03 6:17:05 PM [Eastern Standard Time]

RETURN VALUE: *size*
The number of items (name=value pairs) in the container, zero if the container is empty
Invalid if the structure of the container is not correct

8.2.2 Add

Adds the name=value pair to the container. Does not verify whether the given name already exists in the container. Stores the result into another container.

FUNCTION: [redacted]

FUNCTION ID: t.b.d.

DESCRIPTION: Adds the name=value pair to the container

PARAMETERS: *inContainer*
The container to which the name=value pair is added
name
The 'name' element of the pair
value
The 'value' element of the pair

RETURN VALUE: *outContainer*
The container that contains all the name=value pairs of the *inContainer* plus the new name=value pair.

Returns *Invalid* if the structure of input container is invalid or when it is impossible to add the name=value pair.

8.2.3 Modify

Modifies the value of the existing name=value pair in the container. If the name doe snot exist, adds the name=value pair to the container. Stores the result into another container.

FUNCTION: [redacted]

FUNCTION ID: t.b.d.

DESCRIPTION: Modifies the value

PARAMETERS: *inContainer*
The container which contents should be modified
name
The 'name' element of the pair
value
The 'value' element of the pair

RETURN VALUE: *outContainer*
The container that contains all the name=value pairs of the *inContainer* with the modified or added name=value pair.

Returns *Invalid* if the structure of input container is invalid or when it is impossible to modify or add the name=value pair.

8.2.4 Get

FUNCTION: [redacted]

Received from < > at 2/12/03 6:17:05 PM [Eastern Standard Time]

FUNCTION ID: t.b.d.

DESCRIPTION: Retrieves the value from the container by specifying the name

PARAMETERS: *container*
The container from which the value is retrieved
name
The name that is sought

RETURN VALUE: *value*
The 'value' element of the name=value pair
The function returns empty string if the container does not contain the specified name.
Returns *Invalid* if the structure of the container is invalid.

8.3 Attributes

Each object has a set of attributes that can be extracted by the application. EFI mandates some of the attributes to be present for all objects of a given type. An object can provide more attributes than mandated. Names of attributes are case-insensitive.

Following attributes are mandatory:

Name	Applicable				Description
	EFI	Class	Unit	Service	
Version	x	x			Version of the given object
Name			x		Descriptive name of the object
Manufacturer			x		Descriptive name of the manufacturer of the object, may include the make and the model

The library defines two management services, both synchronous.

8.3.1.1 getAllAttributes

Returns all the attributes for the given object in a form of a container. Attributes that are not specified by EFI are also included.

FUNCTION: [redacted]

FUNCTION ID: t.b.d.

DESCRIPTION: Reports all attributes of EFI object

PARAMETERS: *object*
Name of an object for which attributes must be reported. An object can be EFI, class, unit or service. Name of the object is provided as a string and follows the convention. Note that the 'efi:' part can be omitted.

RETURN VALUE: *container*
The container with name=value pairs, one pair for each attribute; empty container if the object has no attributes.
Invalid if the object does not exist or if attributes cannot be returned due to memory constraints.

8.3.1.2 getAttribute

Returns the value of a specified attribute for the given object. Can be used to retrieve values of attributes that are both specified by EFI or are defined by the object.

Received from < > at 2/12/03 6:17:05 PM [Eastern Standard Time]

FUNCTION:	[redacted]
FUNCTION ID:	t.b.d.
DESCRIPTION:	Reports the value of a given attribute of a selected EFI object
PARAMETERS:	*object* Name of an object for which attributes must be reported. An object can be EFI, class, unit or service. Name of the object is provided as a string and follows the convention. Note that the 'efi:' part can be omitted. *name* Name of the attribute of the given object. Properties that must be present for the object are as follows
RETURN VALUE:	*value* Value of the given attribute, empty if the object has no attribute of the given name *Invalid* if the object does not exist or if the value cannot be returned due to memory constraints.

8.3.2 Object discovery

EFI makes it possible to query about the existence of some objects. Following services allow the application to collect information about existing objects or about the existence of the specific object. All the services are synchronous and are implemented as function calls.

8.3.2.1 getAllObjects

The service lists all the objects of a given kind that are within the given object. Returns the container with identifiers of all the objects.

The service can be used to return names of services that are specific to the given object. Note that most of the functions listed in this library are in fact services that are implemented as functions to increase usability. Names of those services are also returned by getAllObjects.

FUNCTION:	[redacted]
FUNCTION ID:	t.b.d.
DESCRIPTION:	Lists all the objects of the specified type that are within the scope of the origin object
PARAMETERS:	*object* Name of an object for which objects must be reported. An object can be EFI, class or unit. Name of the object is provided as a string and follows the convention. Note that the 'efi:' part can be omitted. *type* Tells what object should be listed, allowed values are: 1 - class (valid for EFI object) 2 - unit (valid for class) 3 - service (valid for class or unit) *attributes* The container that holds name=value pairs for attributes of objects that should be selected. Only objects that has the required value of the required attribute are returned. If the container is empty, all objects of a given type are returned.

Received from < > at 2/12/03 6:17:05 PM [Eastern Standard Time]

RETURN VALUE: *container*
Numbered list of local names of listed objects, in a form:

"1" = "name_1"
"2" = "name_2"
...

The container is empty if the number of listed items is equal to zero

Returns *Invalid* if the object does not exist or if the type of listed objects does not match the object.

8.3.2.2 getFirstObject

Returns the first object that is a part of the given object. Can be used to iterate classes, units or services. The order of objects is not specified, but the subsequent use of getFirstObject and getNextObject guarantees that all objects are processed.

FUNCTION: [redacted]

FUNCTION ID: t.b.d.

DESCRIPTION: Returns the fist object of a given kind that belongs to the specified object

PARAMETERS: *object*
Name of an object for which objects must be reported. An object can be EFI, class or unit. Name of the object is provided as a string and follows the convention. Note that the 'efi:' part can be omitted.

type
Tells what object should be listed, allowed values are:

1 - class (valid for EFI object)
2 - unit (valid for class)
3 - service (valid for class or unit)

RETURN VALUE: *name*
Returns the first object of a given type.

The string is empty if there is no objects of a given type.

Returns *Invalid* if there is no object that has been provided as parameter or if the type does not match the object.

8.3.2.3 getNextObject

Returns the next object that is a part of the given object, after the object that has been retrieved with the previous getFirstObject or getNextObject. Can be used to iterate classes, units or services. The order of objects is not specified, but the subsequent use of getFirstObject and getNextObject guarantees that all objects are processed.

FUNCTION: [redacted]

FUNCTION ID: t.b.d.

DESCRIPTION: Returns the fist object of a given kind that belongs to the specified object

Received from < > at 2/12/03 6:17:05 PM [Eastern Standard Time]

PARAMETERS: *object*
Name of an object for which objects must be reported. An object can be EFI, class or unit. Name of the object is provided as a string and follows the convention. Note that the 'efi:' part can be omitted.
previous
Name of an object that has been previously get.
type
Tells what object should be listed, allowed values are:

1 - class (valid for EFI object)
2 - unit (valid for class)
3 - service (valid for class or unit)

RETURN VALUE: *name*
Returns the first object of a given type.

The string is empty if there is no objects of a given type.

Returns *Invalid* if there is no object that has been provided as parameter or if the type does not match the object or if the previous object cannot be found.

8.3.2.4 queryObject

Verifies whether the given object (EFI, class, unit or service) exists.

FUNCTION: [redacted]

FUNCTION ID: t.b.d.

DESCRIPTION: Verifies whether the given object exists.

PARAMETERS: *object*
Name of an object for which existence must be reported. An object can be EFI, class, unit or service. Name of the object is provided as a string and follows the convention. Note that the 'efi:' part can be omitted.

RETURN VALUE: *yesno*
Boolean value, false if object does not exist, truth if the object exists.

8.3.3 Common class service

Class services are usually defined by the class specification. Service defined below is mandated for all the classes so that it is defined by the Framework. The service is synchronous and is implemented as function call.

8.3.3.1 selectUnit

FUNCTION: [redacted]

FUNCTION ID: t.b.d.

DESCRIPTION: Select the unit that best matches selection criteria.

PARAMETERS: *class*
Local name of the class.
criteria
The container that holds all the selection criteria. Selection criteria are defined by the specification of the class. If selection criteria are not provided, the class should return its default unit.

Received from < > at 2/12/03 6:17:05 PM [Eastern Standard Time]

RETURN VALUE: *name*
The identifier of the selected unit.

The name is empty if there is no unit that is matching the criteria.

Returns *Invalid* if the class does not exist or if the container with selection criteria is invalid.

8.3.4 Synchronous and asynchronous service

This group of functions allows to control an arbitrary service, whether provided by EFI, class or unit with the exception of services already defined by the library.

Services can be categorized as synchronous or asynchronous. The synchronous service is executed entirely when it is started, i.e. the control returns to the application once the service is completed.

The asynchronous service is started by the application but after that the service can execute independently. The application may use function calls to monitor the progress of the service.

8.3.4.1 Invoke

Starts synchronous service.

FUNCTION: [redacted]

FUNCTION ID: t.b.d.

DESCRIPTION: Invokes the synchronous service identified by the name with input values defined in the inContainer, storing result values in the outContainer.

PARAMETERS: *classunit*
The name of the class and unit, equivalent to the part of the object name between first two slash characters '/'.
service
Name of the service
inContainer
The container that contains all the input parameters that are necessary for the service in a form of 'name=value' pairs. The list of required and optional parameters are provided by the specification of the service. Parameters that are not used by the service are ignored.

RETURN VALUE: *outContainer*
The container that contains all the values returned by the service in a form of 'name=value' pairs. The list of returned parameters are provided by the specification of the service.

The container is empty if the service returns no value.

The function returns *Invalid* if the service does not exist, if the service cannot be run synchronously or if the service execution fails.

8.3.4.2 Start

Starts asynchronous service.

FUNCTION: [redacted]

Received from < > at 2/12/03 6:17:05 PM [Eastern Standard Time]

FUNCTION ID:	t.b.d.
DESCRIPTION:	Invokes the service identified by the name with input values defined in the inContainer, storing result values in the outContainer.
PARAMETERS:	*classunit* The name of the class and unit, equivalent to the part of the object name between first two slash characters '/'. *service* Name of the service *inContainer* The container that contains all the input parameters that are necessary for the service in a form of 'name=value' pairs. The list of required and optional parameters are provided by the specification of the service. Parameters that are not used by the service are ignored.
RETURN VALUE:	*outContainer* The container that contains all the values returned by the service in a form of 'name=value' pairs. The list of returned parameters are provided by the specification of the service. The container must contain the pair 'instance=...' that identifies the instance of the service. The function returns *Invalid* if the service does not exist, if the service cannot be run asynchronously or if the service initialization fails.

8.3.4.3 Control

Controls the progress of the asynchronous service.

FUNCTION:	[redacted]
FUNCTION ID:	t.b.d.
DESCRIPTION:	Invokes the service identified by the name with input values defined in the inContainer, storing result values in the outContainer.
PARAMETERS:	*classunit* The name of the class and unit, equivalent to the part of the object name between first two slash characters '/'. *service* Name of the service *instance* An instance of the service, as reported by the 'start' function. *control* Type of control that is required for the instance of the service: 0 - query 1 - stop *inContainer* The container that contains all the parameters that will be passed to the service in a form of 'name=value' pairs. Empty if no data should be passed to the service. The list of required and optional parameters are provided by the specification of the service. Parameters that are not used by the service are ignored.

Received from < > at 2/12/03 6:17:05 PM [Eastern Standard Time]

RETURN VALUE: *outContainer*

The container that contains all the values returned by the service in a form of 'name=value' pairs. The list of returned parameters are provided by the specification of the service. The container must return the 'status=...' pair that informs about the status of the service.

The function returns *Invalid* if the instance of the service cannot be identified, if the control is not possible or if the communication to the service failed.

Received from < > at 2/12/03 6:17:05 PM [Eastern Standard Time]

9. WML implementation

The WML implementation maps available services into the namespace and makes them available through the 'dual stack' architectural concept. Such concept positions EFI as yet another server, however located at the mobile client rather than at the other end of the wireless link.

The interaction follows the browser's request-response rules. The service call is interpreted as a request to retrieve a card of certain URI. Such request initiates the service which should compose and return the well-formed WBXML-coded deck of cards to the browser. The browser in its regular course of interaction renders and displays such deck to the user. The service is also capable of directing the browser to display the particular card from the particular deck.

Only class and unit services are available through WML API. Of class services, the selection service is not available. In addition, however, objects may be available.

The definition of services is provided by the specification of the class. The Framework does not define any specific service. The Framework defines the method to invoke services through WML API.

9.1 Behaviour of WAP client

The implementation of EFI AI as WML API makes intensive usage of the namespace. The service is actually accessible only through the URI name scheme. The scheme is identical with the one defined by the Framework with the exception that the 'efi:' prefix must be always present. The general format of URI is as follows:

```
efi:/[<class>][.[<unit>]]/<service>[?<pname>=<value>[&<pname>=<value>]*]
```

The proper usage of the namespace allows to access services that are provided by different objects. It is also possible to access objects by themselves. In this case it is assumed that an object may handle the URI by returning the deck or the card. Note that it is not possible to pass parameters to objects.

9.1.1 EF Broker

In order to access the broker, the following notation is used.

```
efi:
```

This notation identifies the EF Broker default WML deck. The EF Broker default WML deck is not mandatory. The contents of the EF Broker default WML deck depends on EFI Broker implementation.

When access to the WML deck is executed, WAP browser displays the EF Broker default page. If the EF Broker does not support the EF Broker default page, the error message should be displayed to user. This error message can be displayed on WAP browser or in the separate message box, depending on implementation.

9.1.2 EF Class Agent

In order to access the class agent the following notation is used

```
efi:/<class>
```

This notation identifies the EF Class Agent default WML deck. The EF Class Agent default WML deck is not mandatory. The contents of the EF Class Agent default WML deck depends on EFI Class implementation. If the EF Class Agent does not support the default page, the error message should be displayed to user. This error message can be displayed on WAP browser or in the separate message box, depending on implementation.

The specification of the particular class defines the default page for its Class Agent.

Received from < > at 2/12/03 6:17:05 PM [Eastern Standard Time]

9.1.3 EF Unit

In order to access the unit, the following notation is used.

```
efi:/<class>.<unit>
```

This notation identifies the EF Unit default WML deck. The EF Unit default WML deck is not mandatory. If the EF Unit does not support the EF Unit default page, the error message should be displayed to user. This error message can be displayed on WAP browser or in the separate message box, depending on implementation.

The specification of the particular class defines the default page for its units.

9.1.4 EF Service

Services may be initialized by any WML method that is used to move to another card. Namely, the 'go' element can be used, in any context that is valid for card navigation. Parameters (if any) must be passed to the service through the URI name=value format or through the postfield structure or through the mix of both methods.

for example,

```
<go href="
efi:/[<class>][.[<unit>]]/<service>[?<name>=<value>(&<name>=<value>)*]">
```

or

```
<go href=" efi:/[<class>][.[<unit>]]/<service>">
<postfield name="..." value="..."/>
<postfield name="..." value="..."/>
</go>
```

Note that EFI makes it possible to access both services standardized by WAP and vendor-specific services. In both cases the same notation applies.

9.2 Discontinuous mode

The EFI service, one started, takes over the control and generates its own decks and cards that are processed by the browser. At this point the application effectively looses control on the flow and must fully rely on the service to carry on the functionality as expected.

The service may implement provision for some form of continuation, e.g. the service may define to what card it returns its control upon completion. The name of such card can be passed to the service as a parameter. It is within the scope of the definition of the service (i.e. it is within the class specification) to define all the relevant functions.

9.3 Context management

The service is generally executed within the context of a browser and makes use of the context of the caller. No new context is created unless the service decides to create one. An application has no control on the context.

The service may interfere with the context of the caller by incidentally overwriting variables used by the application if they are identical with variables used internally by the service.

9.4 UAProf

The User Agent Profiling mechanism for WAP is defined in [UAProf].

As a side effect of the 'dual stack' architecture the EFI service generates cards and decks that are displayed by the browser. This information does not pass through the gateway so that the User Agent Profile information cannot be utilized.

Received from < > at 2/12/03 6:17:05 PM [Eastern Standard Time]

This may lead to certain inconsistencies in user experience where the similar contents is rendered differently depending whether it arrives from the origin server or from EFI service.

EFI Framework recommends that the mobile client should do its best to minimize those inconsistencies without changes to the current WAP architecture.

9.5 Cache

The WAP cache mechanism [CACHE] must not be used when EFI services are accessed through the WML API, regardless of information in the header.

Received from < > at 2/12/03 6:17:05 PM [Eastern Standard Time]

10. EFI Class Specification

EFI Class Specification is a document that defines requirements for EFI Class. This document is standardized for every class by WAP Forum.

10.1 Contents

EFI Class specification should contain at least the following parts.

Name

The name of the class, case-insensitive. Must be unique within the scope of EFI and must not be one of the reserved names. Currently only the 'vnd' name is reserved.

Scope of the class

Explanation of what constitutes the scope of applications that are supported with the given class.

Specification of Framework class services

Some class services are drafted by the Framework, which delegates its detailed description to the class specification. For the current Framework, it is the selectUnit service, accessible through WMLScript API. This part of the class specification that defines details of such services.

Mandatory class services

Some services are mandatory for the class, i.e. they must be implemented by the class. This part defines such services.

Optional class services

The optional class service is the service that may be implemented by the class. The class still fulfills the specification if the service is not implemented. However, no non-standardized class service can have the same name of the optional class service.

Mandatory unit services

The mandatory unit service must be implemented by every unit that belongs to the given class.

Optional unit services

The optional unit service is the service that may be implemented by the unit. The unit still fulfills the specification if the service is not implemented. The implementation is per-unit, i.e. some units may elect to implement optional services while others may not. However, no non-standardized unit service can have the same name of the optional unit service.

10.2 Service definition

The service definition specifies all the necessary details of the service. This should include at least the following components. Note that each service is defined for the given API. If similar services are accessed through different APIs, they must have separate definitions.

Name

The name of the service case-insensitive. The name is local and unique within the class. Similar services that are accessible through different API must have different names.

Received from < > at 2/12/03 6:17:05 PM [Eastern Standard Time]

Description

Explanation of the functionality provided by the service.

API

The API through which the service is accessible.

Requirement level

Determines whether the service is mandatory or optional.

Mode

For WMLScript API defines whether the service is synchronous or asynchronous. For WML API it is irrelevant.

Input parameters

For each input parameter: its name, default value (if optional) and its meaning.

Output parameters

If the service returns any output parameters: its name and its meaning.

10.3 Generic class specification

EFI Framework defines the generic class, i.e. the class that accommodates all the units that do not fit the specification of any particular class. The specification of the generic class is provided below.

Name

The generic class has no visible name. Within the URI name scheme the generic class is represented as an empty string.

Scope of the class

The generic class defines minimum requirements for units that do not currently fit the specification of any other class. It may include e.g. units that are specific to the mobile client, units that has not yet been standardized or units that represent such a narrow application area that the standardization is unlikely to happen.

Specification of Framework class services

The Framework defines one service of this kind, selectUnit, accessible through WMLScript API. The implementation of this service by the generic class is mandatory. However, the generic class ignores all the criteria provided as input parameters and always returns an empty string.

Mandatory class services

The generic class defines no mandatory class services.

Optional class services

The generic class defines no optional class services.

Mandatory unit services

Received from < > at 2/12/03 6:17:05 PM [Eastern Standard Time]

The generic class defines no mandatory unit services.

Optional unit services

The generic class defines no optional unit services.

Received from < > at 2/12/03 6:17:05 PM [Eastern Standard Time]

11. Appendix A. History

Document history		
Date	**Status**	**Comment**
18-Jun-1999	Version 0.1	Created document.
11-Aug-1999	Version 0.2	Significant modifications
25-Aug-1999	Version 0.3	Comments included, prepared for WAP Forum
06-Sep-1999	Version 0.4	Several comments from the e-mail discussion
29-Nov-1999	Version 0.5	Event handing and state model
12-May-2000	Version 0.6	Significant changes to reflect works of Core Team
26-May-2000	Version 0.7	Changes after Montreal meeting
03-June-2000	Version 0.8	Comments to version 0.7 included

Contacts:

EFI Chair: Caija Appelros, Ericsson

Tel.: +1 514 345 7900 x2586- Fax: +1 514 345 6140- Internet: caija.appelros@lmc.ericsson.se

EFI Framework Editor: Piotr Cofta, Nokia:

Tel.: +1 650 625 2397 – Fax +1 650 625 2502 – Internet: piotr.cofta@nokia.com

This document is written in Microsoft Word 97 for Windows

Received from < > at 2/12/03 6:17:05 PM [Eastern Standard Time]

Roger J. Levy

From: Infotechnorth [infotechnorth@home.com]
Sent: Thursday, October 05, 2000 9:42 AM
To: roger@technologypartners.com
Subject: MedSearch Technologies
Importance: High

Roger,
I meant to give you this web article, since you hadn't heard of MedSearch Technologies--they seem to have (somehow) a wireless home-care technology using PDAs. I didn't get any patent hits on them. --Brenda

MedSearch Technologies, Inc. Develops a Revolutionary Home-Care Wireless Technology Utilizing PDAs -Personal Organizers- as Patient Monitors

Monday September 25 8:52am
Source: BusinessWire

NEW YORK--(BUSINESS WIRE)--Sept. 25, 2000--MedSearch Technologies, Inc. (OTC BB: MDSX) today announced that the Company is developing a wireless versatile platform technology for home-care.

This platform is expected to be applied in monitoring patients in their homes and in their everyday environment using Personal Data Assistants (PDAs).

MedSearch's unique software and hardware application is expected to be compatible with most of the standard PDAs such as 3Com's Palm Pilot, Handspring's Visor(TM), Rim's Blackberry, and Windows CE-based Pocket PCs.

This patent-pending system is the first to utilize PDA's as patient monitors by measuring patient medical data using disposable sensors. The medical data that is acquired in the PDA is stored, displayed if necessary and transferred via wireless channels to a central secured server.

To assist the diagnostic procedure, the data can be analyzed online and accessed by authorized personnel using either a desktop computer in the clinic or another PDA at any location. MedSearch's PDA hardware and software will permit mobile patients and medical professionals who are away from their traditional work settings to manage their patients remotely.

The Company's various home-care applications for this PDA technology are currently at different stages of development. These applications include the monitoring of patients with congestive heart failure, patients with arrhythmia or implanted pacemakers, patients with diabetes, and patients with asthma. Additionally, MedSearch's patent-pending sensor attached to a PDA is aimed at assessing male erectile dysfunction and can be used at home.

Professor Ofer Barnea, chairman of MedSearch's scientific advisory board stated, "This versatile platform is unique in its ability to monitor patients with various diseases in their homes. Patients

Can email from Infotech on this patent search.

10/10/00

Received from < > at 2/12/03 6:17:05 PM [Eastern Standard Time]

that would benefit from this technology include patients with congestive heart failure and patients that are limited in their mobility. This technology will keep the patient from being hospitalized and their subjective perception of their condition will be conveyed to their physician as well."

Jacob Meller, president of MedSearch, stated "We believe that this platform technology will not only improve healthcare, but will save substantial funds in hospitalization costs and in drug consumption. Insurance companies have already shown great interest in home-care monitoring."

"We believe that MedSearch's technology will establish the company as a leader in unique measurement systems including sensors, algorithms, devices and wireless remote data transfer. Our strong ties with academic and medical communities position the Company at a powerful crossroads," said Jacob Meller.

About MedSearch Technologies, Inc.

MedSearch Technologies, Inc. is a medical device company with strong research and development (R&D) capabilities. MedSearch expects to bring to market advanced medical technologies and revolutionary diagnostic methods through the development of unique disposable sensors, sophisticated algorithms, online analysis, display and wireless data transfer devices.

About MedSearch Technologies, Inc.

Safe Harbor Statement

Certain statements contained in this press release are forward-looking and such statements are made pursuant to the safe harbor provisions of the Private Securities Litigation Reform Act of 1995. Actual results might differ materially from the forward-looking statements contained in this press release. Important factors that could cause actual results to differ materially from those indicated by such forward-looking statements are risks involved in starting new product lines, competition, managing expansion, requirements for new product development and product obsolescence, and other risks and uncertainties that are described from time to time in the Company's reports and registration statements filed with Securities and Exchange Commission.

Contact:
MedSearch Technologies, Inc.

Frieda Goldstein, Vice President, 212/943-6000

E-mail: contact@medsearchnet.com

Website: www.medsearchnet.com

Received from < > at 2/12/03 6:17:05 PM [Eastern Standard Time]

Bluetooth versus WLAN IEEE 802.11x

Jyrki Oraskari
Product Modelling and Realization Group (PM&RG)
Department of Computer Science and Engineering
Helsinki University of Technology
jyrki.oraskari@hut.fi
37266J

ABSTRACT

Comparison of the he two principal standards for the wireless home LAN market in the near future.

Keywords

Wireless LAN, Bluetooth, IEEE 802.11, IEEE 802.11b, IEEE 802.15, HiperLAN2

1. INTRODUCTION

Wireless LANs have been available for a decade [11]. The first technologies were using proprietary solutions but standard IEEE 802.11 products have already been for sale for 2 years [15]. The three principal standards for the wireless home LAN market are HomeRF, Bluetooth, and IEEE 802.11 wireless Ethernet [11].

2. Bluetooth

Bluetooth is a de facto standard for very low powered and short-range radio connections that would link your personal access devices (PDA), mobile phones and laptops, and give them Internet access via hot spots [1].

Bluetooth 1.0 specifications were completed 1999, but the first products are expected being shipping in the second half of year 2000 [15].

In the long term Bluetooth will be built in a chip e.g. on the mother board of a laptop or a cellular phone – in the shorter term it will be added using PC cards or USB adaptors [22], while in the IEEE 802.11x branch they are having similar progress. The IEEE 802.11x is shipped as PC cards, and soon the wireless connection will be build in notebook computers by PC makers [24].

Bluetooth's native ad hoc network property makes it very useful replacing cables at home, giving printing support at hotel or acting as an ID card at a shopping center. IEEE 802.11 WLAN does support ad hoc networking, and can be used likewise, but the main stream of the IEEE 802.11 developers isn't focused on that subject. [15]

3. WLAN IEEE 802.11x

Basically WLAN is an ordinary LAN protocol which is modulated on carrier waves. WLAN IEEE 802.11 is a natural extension to LAN Ethernet, and the modulated protocol is IEEE 802.3 Ethernet [3]. Actually, there are three IEEE 802.11 standards that cover FHSS (Frequency Hopping Spread Spectrum), DSSS (Direct Sequence Spread Spectrum), and infrared technologies [10]. No products have implemented the IR standard yet [15] or at least the spec is rarely used [11]. IEEE 802.11b is only using DSSS technology and CCK (Complementary Code Keying) modulation to achieve it's high data rates [11,15].

Common WLAN products, which are using IEEE standards, are based on the IEEE 802.11 and IEEE 802.11b specifications. 802.11b is a high rate extension to the original 802.11, and specifies 5.5 to 11 Mbps data rates [11].

Received from < > at 2/12/03 6:17:05 PM [Eastern Standard Time]

The next generation of the standard, IEEE 802.11a, also known as HiperLAN2 [13], will operate in a new band of frequencies at 5 GHz, and achieves as high data rates as 54 Mbps [12]. It uses OFDM (Orthogonal Frequency Division Multiplexing) [12] as opposed to spread spectrum used in Bluetooth, IEEE 802.11 and IEEE 802.11b. The first 802.11a products are estimated to be on market in the year 2002 [15].

4. Bit rates

IEEE 802.11x WLAN is clearly faster than Bluetooth.

Bluetooth hop frequency (1600 hops/second) is very high when compared to the radio frequency usage of WLAN IEEE 802.11 (2.5 hops per second). The high hop frequency limits the maximum length of the datablocks. [3]'s opinion is that for this reason Bluetooth channel cannot handle as high data throughput as IEEE 802.11 WLAN does. His conclusion is not straightforward, but the overhead of switching between the frequencies could cause some delays, and affect the throughput in that way.

A Bluetooth node can send data at 1 Mbs flow [15,16] that is shared with the devices at the same piconet. The master device of the network can open asymmetric or symmetric data connections to the devices that are connected to the net. An asymmetric data rate 721Kbps (while permitting 57 kbps return direction) and symmetric rate of 432.6 kbps is possible according to Bluetooth specifications [9,18,19,20]. So, it's often suggested that Bluetooth's data throughput is around 721 Kbps, but [10] and [17] figure Bluetooth's actual data rate to be around 30 to 400 kbps in practice.

The original IEEE 802.11 network cards can transfer data at rates from 1 to 2 Mbps [15].

IEEE 802.11b is advertised having 5.5 to 11 Mbps performance. However the real throughput is close to 4 - 5 Mbits [10,11], which match the situation where you and some other access point user are using a common hub instead of using switches in a wired Ethernet. There's no wireless equivalent to an Ethernet switch [15].

John Schafer suggests on [15] that 10 users using the 11 Mbps capacity would lead to performance 11 Mbps/10 = 1.1 Mbps. That cannot be the case, since, while there is a clear correlation, the function of the effective speed is not linear.

There are proposals to double the 11 Mbps performance in the future [12].

As I already mentioned above, IEEE 802.11a will support data rates from 24 to 54 Mbps [13,15]. The system is still comparable to the common Ethernet without any switch devices. In use, the actual speed of the solution can be estimated to be around 40% of the mentioned above, which is about 10 to 22 Mbps.

5. Range

Bluetooth is designed to use very low transmission power. Maximum transmission range will be around 10 m. Later versions may allow longer ranges. High-powered Bluetooth would extend the range to 100m [8,17,18].

IEEE 802.11 is planned to be used in office buildings and in a campus. The transmission range is around 15-150 m indoors and 300 m outdoors [8,10,17]

6. Multiplexed Connections

Bluetooth RFCOMM protocol emulates the common known serial standard RS232. There can be 59 simultaneous connections. TCP/IP protocol stack can be added to the serial data link via PPP [1].

Bluetooth L2CAP provides protocol multiplexing for software based third party upper-level protocols as TCP/IP [5]. This is depicted in the protocol stack introduced in [4], which shows IP and the TCP/UDP layers of TCP/IP implemented over the L2CAP link layer.

802.11 has full TCP/IP support [1]. The solution is a natural extension of using TCP/IP over the Ethernet LAN.

7. RF Output Power

Bluetooth uses very low transmission power, about 1 mw [6], which allows operation over distances up to 10 m. However, Bluetooth specification permits increasing the transmission power to 100 mw in the future [6], and then

Received from < > at 2/12/03 6:17:05 PM [Eastern Standard Time]

the Bluetooth devices could operate over distance of maximum 100 m.

WLAN IEEE 802.11: 1W into antennae US; 100mW Europe [7,26].

8. Security

Since the upper layers of OSI model are or can be made equal for both of the technologies, I compare here in this article mainly Data-Link Layer and Physical Layer of both of them.

Bluetooth devices use PIN (Personal Identification Number) codes and Bluetooth addresses to identify other Bluetooth devices [18].

The high hopping frequency used in Bluetooth transmissions is said to add protection against eavesdropping the connection [9,18], but, since the hardware address defines the used hopping frequencies [27], catching only one packet of a transmission is needed for a malicious listener to synchronize their devices.

Bluetooth uses 4 LFSR (Linear Feedback Shift Registers) to encrypt link level data and thus further enhance the security. The effective key length of the algorithm is selectable between 8 or 128 bit. This allows Bluetooth to be used in countries with regulations limiting encryption strength. [9,18]

The security setup for a Bluetooth connection is done in the software layer. An inexperienced or careless user can make the level of security down to almost zero [24].

IEEE 802.11 networks are based on absence of privacy, since the access point in the system is acting as a hub in a wired network. The basic nature of a hub is that it repeats all packets it receives from any device to each device in the network [23].

IEEE 802.11 standard includes an optional encryption capability WEP (Wired Equivalent Policy), which can be implemented by embedding RSA's RC4 security algorithm in the media access controller (MAC). The passwords are stored in the access points and on each mobile computer. It encrypts the transmissions between the access point and the mobile devices. All the devices are using the same password in a network. Obviously the encryption doesn't give much security in a public network, since they would have to publish the password. [8,12,23]

WEP uses 64-bit (while [8] claims the security of IEEE 802.11 being based on 40-bit RC4) encryption key [8,13].

9. Interference and robustness

2.4 GHZ ISM radio frequency band is a broad, free and unlicensed spectrum space. That is an advantage that attracts the designers of portable data devices. But all of their inventions have potential of interfering with each other's [2]. Bluetooth uses much lower transmission power than its competing technologies (e.g. IEEE 802.11b). So, more powerful devices may overwhelm its signal [2].

IEEE 802.15 (Coexistence Task Group 2) is established to improve the coexistence of the two standards. The standards committee and vendors are trying to make changes to prevent the collisions of the data transfers. The goal is to decrease the probability of Bluetooth and IEEE 802.11x devices transmitting at the same time [15, 20,21].

Jim Geier writes, "Preliminary analysis conducted by the IEEE 802.15 group indicates that the 802.11 direct sequence high rate devices are very reliable in the presence of transmitting Bluetooth products. Another recommendation is to avoid having Bluetooth products transmit within 50 feet of 802.11 radios and access points. The relatively low power signals of the Bluetooth devices diminish rapidly over longer distances. If these tactics aren't feasible or don't provide adequate results, also consider decreasing the distances between 802.11 radios and access points. This strengthens the 802.11 signals, which reduces the effects of Bluetooth interference." [21]

Bluetooth may be able to handle this interference by using its narrowband fast-frequency-hopping scheme that uses pseudo random-hop pattern and short data packets. Its high hopping rate at 1600 hops/second can help Bluetooth evade interference and stand noise that could swamp IEEE 802.11 [19, 20]. Further, the use of forward error correction (FEC) decreases the number of needed retransmissions by adding redundant data to the data stream [19].

On the other hand, Peter L. Fuhr had 802.11 wireless Ethernet operating right next to a Bluetooth transceiver module, but he didn't detect any degration in the 802.11

Received from < > at 2/12/03 6:17:05 PM [Eastern Standard Time]

link as the result of the operation of the Bluetooth device [19]. It may imply the systems aren't as error prone as people are afraid of.

As well, IBM reported very little degradation of signal while the two technologies are operating near each other [25].

To an unintended receiver, a device using some other standard (i.g. IEEE 802.11x) at a the same frequency band, the frequency hopping scheme (FHSS) of Bluetooth appears as a low powered and short-duration impulse noise [18]. The data transmission looks like it is the normal background noise, and they are designed to handle it.

Still, the interference can cause problems for a mobile laptop user using devices that follow both the IEEE 802.11b and Bluetooth standards. At circuit level at a device you cannot possibly transfer data using both of the specifications at the same time, since they are utilizing the same radio frequencies, and shielding them from each others disturbance may not be possible. That may set limit for the coexistence of the standards.

9. Future

As both standards go more sophisticated the difference between them will be narrowed. In the next few years the transmission power of Bluetooth is expected to allow the devices to operate in a range which is ten times wider than for the first prototypes. Further, the bandwidth is anticipated to be greater [18] allowing higher data rates. The 2.0 version of the spec will likely elevate the data rate to 2 Mbps [14].

If Bluetooth SIG keeps its promise of relatively very cheap radio chips, they will heavily compete with the WLAN cards that are already in the market [22]. However, the costs of IEEE 802.11x WLAN are getting down. A version of Lucent PC card can be got from Apple for only $99 [13], and Rang-Hong Yan of Lucent Technologies' Bell Labs is aggressively suggesting the cost of wireless LAN cards will drop below $50 and as low as $5 in the next few years [14]. At the same time Ericsson Bluetooth marketing manager says he never promised the Bluetooth chips to cost only $5. The cost of the module is around $27 and might drop to about $10 in 2003 [14].

Still another issue, Bluetooth transmitters have reportedly cut down portable battery life more than expected [24]. If that defect won't be alleviated that will affect the mobility of Bluetooth appliances and indirectly have effect on its success in the market.

10. CONCLUSIONS

IEEE 802.11 standard is better suited for wireless local area networks. It is faster and gives wider range of use. On the other hand, Bluetooth's natural ad hoc connectivity makes it need fewer configurations, and gives it good usability in many new applications. Bluetooth does stand better noisy data channels.

It is not easy to say, if security of either of them is better. It varies a lot, depending on the user selections. And, in many aspects, they are very similar.

11. REFERENCES

1. Waxler J.: 802.11 vs. Bluetooth. NetWorld Fusion Newsletters. 2000. http://. (Ref. 09/25/00).
2. Derfler F.: Crossed Signals: 802.11b, Bluetooth, and HomeRF. PC Magazine. ZDNet. 2000. http://. (Ref. 09/25/00).
3. What about competing techonologies?: Bluetooth – An Overwiev. Johnson Consulting. http://. (Ref. 09/25/00).
4. Aalto A.: Bluetooth. Helsinki University of Technology. 1999. http://. (09/12/99)
5. Spaker R.: Bluetooth Basics. Embedded Systems Programming. July 2000. http://www.embedded.com/internet/0007/0007ia1.htm (Ref. 09/27/00)
6. Quinn L.: Bluetooth. Vectors Technology Brief. August 1999. Dell Computer Corporation. 1999. http://www.dell.com/us/en/gpd/topics/vectors_1999-blue.htm (Ref. 09/27/00)
7. http://www.spu.edu/~dib/comp.html (Ref. 09/25/00)
8. Cravotta N.: Wireless standards vie for your app. EDN Access. 1999. http://www.ednmag.com/ednmag/reg/1999/051399/10ss.htm (Ref. 09/29/00)
9. Bluetooth FAQ. Bluetooth Central. 2000. http://www.bluetoothcentral.com/faq_plain.html (Ref. 09/29/00)
10. Caswell W.: Wireless Home Networks, Disconnected Connectivity. Home Toys Article. HTI Home Toys. 2000.

Received from < > at 2/12/03 6:17:05 PM [Eastern Standard Time]

http://www.hometoys.com/mentors/caswell/apr00/wireless.htm (ref. 09/29/00)

11. Grewe T., Nesin R.: Wireless Home Networking. Lucent Technologies Microelectronics & Communications Technologies Division, Allentown, Pennsylvania, USA. 2000. http://www.tdap.co.uk/tdap/adding_value/value(lucent_0003).html (Ref. 09/29/00)
12. Fisher C.: Wireless home nets needs 802.11a. EE Times. 2000. http://www.planetanalog.com/story/OEG20000728S0021 (Ref. 09/29/00)
13. Passmore L. D.: Wireless LANs Come of Age. Business Communications Review. March 2000. http://www.thg.com/promo/Articles/BCR_3_2000.htm. (Ref. 09/29/00)
14. Ohr S.: The Scarlet "A". The Next Big Thing. Planet Analog. 2000. http://www.informationweek.co.uk/story/scarlet/OEG20000409S0001 (ref. 9/29/00)
15. Schafer J.: Wireless for Desktops. Wireless Data Options. ITComm. 2000. http://www.itcom.itd.umich.edu/wireless/options.html (08/24/00)
16. Oraskari J.: Bluetooth. 2000. http://www.hut.fi/~joraskar/bluetooth.html (8/25/00)
17. Competition. http://www.utdallas.edu/~yiching/project/bluetooth1/Competition.htm (Ref. 09/29/00)
18. Frequently Asked Questions. MobileInfo. http://www.mobileinfo.com/Bluetooth/FAQ.htm (Ref. 09/29/00)
19. Fuhr P. L.: Bluetooth. Sensors. July 2000. http://www.sensormag.com/articles/0800/90/main.shtml (Ref. 09/29/00)
20. Yoshida J.: Interoperability issues dog Bluetooth's rise. EETimes. 2000. http://www.eetimes.com/story/OEG20000616S0022 (Ref. 09/29/00)
21. Geier J.: Interference Potential Between Bluetooth and IEEE 802.11. January 2000. Wireless-Nets Consulting Services. http://www.wireless-nets.com/whitepaper_interference.htm (Ref. 09/29/00)
22. Hunn N.: Bluetooth versus 802.11. TDK Systems. 2000. http://www.cellular.co.za/bluetooth_versus_802.htm (Ref. 09/29/00)
23. The Current Assessment of Public Nomadic Wireless Computing As of May 10, 2000. 2000. http://www.ats.wola.edu/news/wireless.htm (Ref. 09/29/00)
24. Willoc J.: As Bluetooth nibbles, competition lurks. CNET News. September 15, 2000. http://news.cnet.com/news/0-1006-200-2784702.html (Ref. 09/29/00)
25. Neel D.: Why Bluetooth Still Lacks Bite. July 10, 2000. PC World. 2000. http://www.pcworld.com/pcwtoday/article/0,1510,17582,00.html (Ref. 09/29/00)
26. Technocom Group Oy. 2000. http://www.technocom.fi/techno006.htm (Ref. 10/27/00)
27. Lindholm Tancred.: Setting up a Bluetooth Packet Transport Link. Helsinki University of Technology. 2000.

Received from < > at 2/12/03 6:17:05 PM [Eastern Standard Time]

Problem #8:
I don't have enough time.

Your Personal Health Buddy

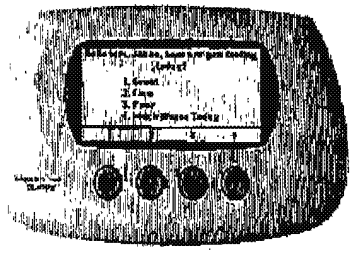

New Devices Allows Doctors to Monitor Patients From Afar

The Health Buddy is an easy way for doctors and chronically ill patients to communicate. (Health Hero Network)

Cutting Edge

Sponsored By ODW

By Jack Smith
ABCNEWS.com

Feb. 26 — Imagine if a doctor could monitor a patient's status 24 hours a day, from anywhere. That's the idea behind new technological breakthroughs that use smart-card technology and the Internet to change the way doctors and patients interact.

The Health Hero Network, a 10-year-old company based in Mountain View, Calif., has created a new way for patients to report on their own health, and for doctors to give them instructions and recommendations online.

"The people who need the most health care … often have the least contact and the least ability to contact their health care provider on a regular basis," says Steve Brown, CEO of the Health Hero Network. "They are disconnected from the system most of the time."

Remote Monitoring

SUMMARY
Internet technology allows physicians to keep track of chronically ill patients.

WEB LINK
Health Hero Network

"The people who need the most health care…often have the least contact and the least ability to contact their

Received from < > at 2/12/03 6:17:05 PM [Eastern Standard Time]

Brown hopes to reconnect patients and doctors with a pager-like device called the Health Buddy. The device is intuitive and easy-to-use, and doesn't require the patient to have any special skills. The base of the wireless unit connects with normal telephone lines.

health care provider on a regular basis."
Steve Brown, CEO of the Health Hero Network

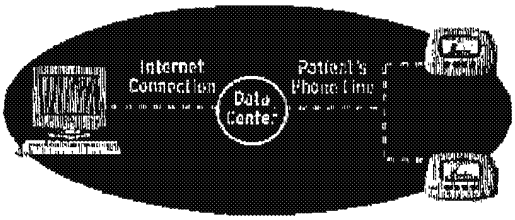

Through the Internet and the Health Hero Network's data center, doctors and patients can relay information to each other quickly and efficiently. (ABCNEWS.com)

On the other end, the physician accesses a special Web site on his or her desktop computer. Health care providers can send messages and questions to patients whenever they want, asking how they feel or if they've remembered to take their medication, and monitor their answers.

The questions and reminders show up on the LCD screen of the Health Buddy, and the patient chooses one of four possible responses to each question. For example, a prompt asking the patient how he or she is feeling may offer responses such as good, fair, poor or very poor.

In addition, the Health Buddy system can be hooked up to other "smart" devices that can measure a patient's blood pressure, glucose, temperature, etc. If the physician feels the need for a follow-up, he or she can call the patient and make further arrangements.

"Oh, this is easy to use," says Joline Lyons, a diabetes patient using the Health Buddy. "All you have to know is how to turn it on, how to use the buttons, and it's wonderful."

Future Care

Doctors believe that through the use of smart devices and the Internet, whole arrays of remote devices will fundamentally change the way long-term patients are treated and monitored in the next century.

"You would have clothing that would monitor your health if you are diseased," says Dr. Rick Satava of the Yale University Medical School. "You would perhaps have rooms in your home that you would go to that would be able to check you on a day-to-day

Received from < > at 2/12/03 6:17:05 PM [Eastern Standard Time]

basis."

In the very near future, devices such as these could give chronically ill patients the independence they desire with the monitoring they need — at a fraction of the cost. ■

Search for more on:

SEEK

Copyright ©1999 ABC News Internet Ventures. All rights reserved. This material may not be published, broadcast, rewritten or redistributed in any form. Please click here for legal restrictions and terms of use applicable to this site. Use of this site signifies your agreement to the terms of use.

Received from < > at 2/12/03 8:17:05 PM [Eastern Standard Time]

The Health Hero Network Online Service

iCare Desktop
Content Library
Health Buddy Appliance
White Paper
Reports & Outcomes
For More Information

The Health Hero Communications Platform

In the United States today, 90 million people suffer from chronic medical conditions like diabetes, asthma, and heart disease. Chronic illnesses account for approximately 75% of total healthcare costs in the United States. As a result, healthcare organizations, realizing the importance that successful management of these patients has on overall cost-effectiveness and patient satisfaction, need innovative methods to manage these patients.

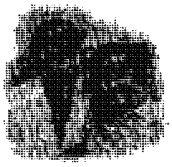

The Health Hero Platform meets the demanding needs of organizations doing chronic disease management by helping healthcare providers and patients work together to manage chronic illness more effectively.

Medical professionals use Health Hero's Platform to deliver personalized support to their patients on an ongoing basis and receive up-to-date information on their patients so they can better track patients and intervene before potential problems escalate into life threatening emergencies.

Because the automated service allows healthcare providers to collect more data on their patients more often, providers can spend less time filling out paperwork and more time caring for their patients. At the same time, patients feel better informed and more connected to their healthcare provider. It is a win-win situation.

How It Works

The Health Hero Platform is a one-to-many, two-way communications link between healthcare providers and chronically ill patients. It consists of the Health Hero® iCare Desktop™, a web-based application used by the nurse/care manager to deliver and review patient responses and the Health Hero® Health Buddy® appliance, used by the patient to receive and respond to the nurse/care manager.

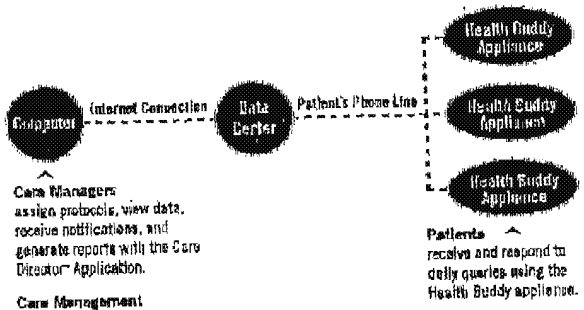

Received from < > at 2/12/03 6:17:05 PM [Eastern Standard Time]

The Health Hero Platform is a major leap in technology with a difference - it doesn't require substantial investment in proprietary new infrastructure to implement. To use the Health Hero Platform, healthcare providers simply need a computer with a standard Internet connection and patients only need a working telephone jack.

Medical providers use the Health Hero ICare Desktop to develop queries, reminders, and tips for groups of patients. These provider-patient "dialogues" can be customized for different disease populations and personalized for individual patients, so each day patients receive messages tailored to their needs. Healthcare professionals also use the web to view current or historical patient information or print out reports. Health Hero includes notification features so care providers can be alerted if a patient's response falls outside a parameter specified by the provider.

Each patient enrolled in the Health Hero service receives a Health Buddy® appliance, a simple, in-home messaging device that plugs into the patient's existing phone line. When it fits their schedule, patients view new information from their healthcare provider on the Health Buddy screen and respond to the queries using the appliance's four buttons. The simplicity of the Health Buddy appliance ensures it is accessible to all patients, regardless of their familiarity with or ability to use technology.

Through the Health Hero Platform, healthcare providers gain a resource to do their jobs more efficiently so they can focus their care on the patients who need it most. At the same time, meaningful caregiver involvement educates and motivates patients to more actively participate in their own self-care.

The Health Buddy appliance also has the facility to connect directly to various home medical devices. This allows biometric data collection and viewing along side the self-reported information collected via the service. Health Hero has received a 510(k) clearance from the FDA for connectivity to five leading brands of blood glucose meters. In the future, Health Hero will pursue opportunities to use the Health Buddy appliance with additional home medical devices, including peak flow meters and blood pressure cuffs. As with the general service, patient diagnosis and treatment is determined and administered solely by a health care professional.

back to top

Site Map | Support | Contact Us | Employment

© 2000 Health Hero Network, Inc. Terms of Use and Legal Notices

Kumetrix

[illegible]

Technology Overview

Painless Blood-Glucose Monitoring

Kumetrix was formed by combining technology from two fields, silicon semiconductor microfabrication and bioscience, to develop a novel painless method of blood sampling for self-testing by diabetics. The pain and psychological trauma associated with the current self-testing method is significant. As a result, many diabetics do not comply with the recommendations of a government study (DCCT), which clearly established the compelling benefits of frequent testing. Kumetrix has designed a silicon-based "micro-needle" with a diameter smaller than that of a human hair, enabling diabetics to withdraw blood painlessly.

Currently available self-testing devices require patients to obtain a blood sample, usually from the finger, by puncturing the skin with a spring-loaded lancet. Patients apply a drop of blood to a test strip, which provides a reading, telling the patient how much insulin to take. Long-term use of this "finger stick" procedure produces calluses, thickening of the skin and loss of sensation in the fingers. Problems with the lancet technique are particularly acute for diabetic children.

Kumetrix's blood-glucose monitor will permit diabetics to test their blood painlessly and neatly. The system consists of a hand-held, battery-powered, electronic monitor—about the size of an audio cassette tape– that accepts a cartridge loaded with up to 10 disposable sampling devices. Each disposable consists of the micro-needle and a receptacle into which the blood sample is drawn.

To take a measurement, a patient loads the cartridge into the electronic monitor and simply presses the monitor against the skin. This action causes the micro-needle to penetrate the skin and draw a very small volume of blood, 1/100th size of a drop (100 nanoliters), into the disposable. Chemical reagents in the disposable react with the glucose in the blood to produce a color. The electronic monitor analyzes the color using a laser light and the blood-glucose concentration is displayed.

The action of taking the blood sample is similar to that of a mosquito. The silicon micro-needle which penetrates the skin and draws the sample is smaller in

Received from < > at 2/12/03 6:17:05 PM [Eastern Standard Time]

cross-section than a human hair, as is the case with the mosquito, and is capable of painless blood sampling, as is also the case with the mosquito *[see figure to right]*. In the majority of mosquito bites, the target animal, human or otherwise, is unaware that he is being bitten. The mosquito uses various chemical agents to facilitate drawing blood without coagulation; it is these chemicals that cause the subsequent swelling, redness, and itching of a mosquito bite. The Kumetrix system does not employ chemical agents to aid its operation.

The company's core technology is potentially applicable to many other medical markets, including neonatal, emergency room and acute care testing, as well as testing for pesticides or nerve gas exposure. The military doctrine regarding nerve agent exposure has changed considerably since the Gulf war and the subsequent terrorist attack in the Japanese subway system. In both cases the casualty rate due to acute poisoning was very low. However, many people continue to suffer illnesses related to chronic low level exposure of those nerve agents. Gulf War Syndrome and the terrorist incidents in Japan involving the nerve gas Sarin have generated interest in a hand-held, rapid-response instrument for detecting exposure levels. The U.S. Army has expressed an interest in funding the development of this product.

for further information, contact:
Kumar Subramanian
President
29524 Union City Blvd.
Union City, CA 94587
(510) 476-0950 ext. 500
e-mail: kumar@kumetrix.com

Back to Main Page

Received from < > at 2/12/03 6:17:05 PM [Eastern Standard Time]

Technology & Clinical Results

Clinical Trial Results

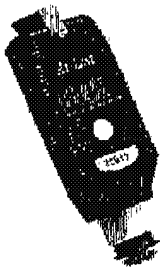

Simple Solutions Through Technology

Progression of Glucose Monitoring Technology

- In the 1970's, home blood glucose monitoring became a reality with the introduction of meters that, if used properly, provided real-time, relatively accurate test results. Accuracy was compromised, however, if these technique-dependent meters were not used properly. The testing procedures were also time consuming and inconvenient.

- In the 1980's minimum procedure blood glucose meters were introduced. People with diabetes were able to achieve accurate results with simple, easy-to-use procedures. Unfortunately, these methods still require painful fingersticks to obtain a blood sample.

- Development efforts in the 1990's have focused on overcoming the next big hurdle – painless testing. Most of the ongoing research has been focused on developing minimally invasive or non-invasive technologies. However, Amira Medical has chosen to focus on the issue of pain versus a particular technology. As a result, Amira's first product, the AtLast Glucose System, is able to perform tests on less sensitive sites such as the forearm, upper arm and thigh to avoid the pain of fingersticks. AtLast and future products will be accurate, simple, convenient and affordable.

Integrated Micro-Technology

- By using micro-components that integrate the optics, electronics and strip design, the AtLast System is able to deliver a tiny blood sample and supply fast results -- in as little as 15 seconds.

- Other significant benefits include single-button operation, a unique capillary action test strip and a

Received from < > at 2/12/03 6:17:05 PM [Eastern Standard Time]

calibration system that helps prevent the use of expired strips.

Patented Test Strips

- The test strip uses capillary action to deliver a tiny blood sample to the test membrane.

Received from < > at 2/12/03 6:17:05 PM [Eastern Standard Time]

LifeChart.com

Take a Tour!

- MANAGING ASTHMA
- MANAGING DIABETES
- MANAGING CARDIOVASCULAR
- FOR PARENTS & KIDS
- HEALTHCARE PROFESSIONALS
- CLINICAL MONITORING SERVICES
- PARTNERS & DEVELOPERS
- WHO WE ARE
- CONTACT US
- SITE MAP

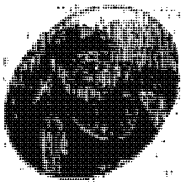

- LIFECHART SWEDEN
- LIFECHART NETHERLANDS
- LIFECHART FINLAND

Log in → HEALTHCARE PROFESSIONALS
MEMBERS

Introducing:

Wired for Wellness

Living with a chronic illness?
You want to thrive, not just survive. You want to hav
active life as symptom-free as possible.

LifeChart.com is dedicated to helping you achieve th
goals with our revolutionary Health Monitoring Syste

Combining the convenience of a handheld monitorin
device and the power of a confidential, online monitc
system that helps you and your healthcare team mal
the best decisions for your healthcare and for your lif

Upgrade your browser:
Internet Explorer | Netscape | AOL

Get Plug-ins:
Flash | Acrobat Reader

LifeChart.com

MANAGING ASTHMA
MANAGING DIABETES
MANAGING CARDIOVASCULAR
FOR PARENTS & KIDS
HEALTHCARE PROFESSIONALS
CLINICAL MONITORING SERVICES
PARTNERS & DEVELOPERS
WHO WE ARE
CONTACT US
SITE MAP

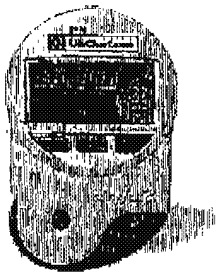

SEARCH GO

AirWatch II Features
Specifications and Accuracy
Publications and Abstracts
Peak Flow and FEV-1 Charts
Request Information

AirWatch II Features

AirWatch® Monitor

- Measures PEF & FEV1 simultaneously.
- Date and Time stamps all readings.
- Holds 480 readings of each test in memory.
- Can be uploaded from the clinic or subjects home.
- Airwatch II with NEW Effort Check™ detects poor technique (popping and jetting).
- Meets ATS standards of performance for accuracy, precision, linearity and back pressure.
- Conforms to the National Asthma Education Programs statement on technical standards for peak flow meters.
- AirWatch monitors are calibrated at the factory and retain calibration for life.
- AirWatch is fun to use and patient preferred.*
- Can be used with or without the connected data component.

Benefits of LIFECHART Data Services

- AirWatch improves patient self-management.*
- Replaces manual data transcription.
- Eliminates patient diary reporting errors.
- Helps identify poor subject compliance.
- Data collected with AirWatch can be merged with your database.
- Data is available by Internet, Fax or ASCII.

* Data on file. Lifechart.com

Get the AirWatch Specifications >

Security | Privacy | Disclaimer
Copyright © 2000 LifeChart.com, Inc. All rights reserved.

Received from < > at 2/12/03 6:17:05 PM [Eastern Standard Time]

About Data Critical Corporation

Data Critical Corporation develops and distributes wireless and Internet systems for communicating critical health care data. The company offers StatView(TM), AlarmView(TM) and FlexView(TM), a line of wireless alarm notification products for hospitals. It also provides MobileView(TM) and ECGStat(TM), a line of wireless products for physicians, as well as WebChart(TM) and PocketChart (TM) online and wireless patient charting tools. Data Critical will soon offer unwiredDr wireless Web services for physicians to allow physicians to chart online, prescribe medications, dictate notes, check lab results and more, leveraging the power of the wireless Internet. In September, Data Critical acquired Paceart, the leader in PC-based software for managing the care of cardiac patients with implanted devices. The company has more than twenty partnerships with such industry leaders as Aether Systems, Agilent Technologies, Boston Scientific, CRITIKON, drugstore.com, GE Marquette, Medtronic Physio-Control and Siemens Medical Systems. Additional information about Data Critical is available at www.datacritical.com

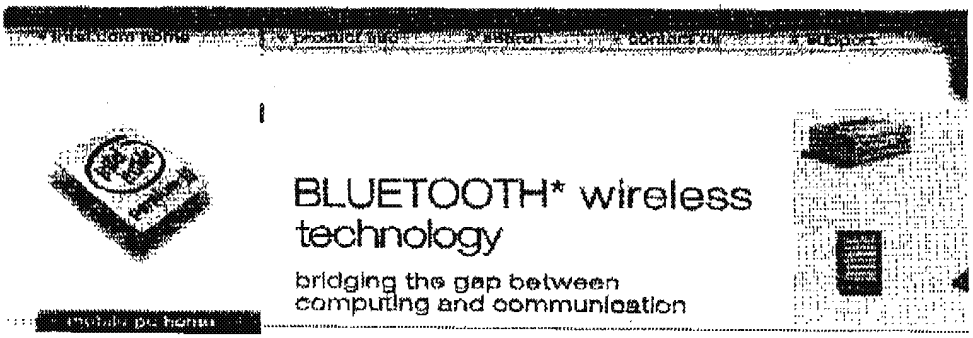

BLUETOOTH* wireless technology

bridging the gap between computing and communication

Initiatives

- Overview
- Total Benefit of Ownership (TBO)
- Bluetooth Wireless Technology

Have you ever wished you could make every minute count? Wouldn't it be gre conveniently connect to your corporate network or send/receive email while w doctor's office, having your car serviced, or even traveling around the globe?

Imagine having your docked mobile PC and PDA automatically synchronize y and calendar as soon as you walk through your office door.

Imagine never again having to wrestle with cables to connect electronic devic Bluetooth* wireless technology, these feats, and many more, will soon becom functions of mobile computing.

The Vision

In early 1998 a group of computer and telecommunications industry leaders, I IBM, Toshiba, Ericsson, and Nokia, together began developing a way for user wide range of mobile devices quickly and easily, without cables. To ensure tha is seamlessly implemented in a diverse range of devices, these leaders forme interest group, formally announced on May 20, 1998, to design a royalty-free, specification technology, code named "Bluetooth." The SIG has quickly gaine from companies such as 3COM/Palm, Axis Communication, Compaq, Dell, L Technologies UK Limited, Motorola, Qualcomm, Xircom and is encouraging th of all other companies interested in offering products taking advantage of a st wireless means for connection.

How Does It Work?

This technology achieves its goal by embedding tiny, inexpensive, short-range into the mobile devices that are available today, either directly or through an a such as a PC Card. The radio operates on the globally-available unlicensed ra GHz, and supports data speeds of up to 721 Kbps, as well as three voice chan devices and adapters should be available as soon as the first half of 2000. Co will cost around $20 initially, eventually falling to around $5. The Bluetooth sp targets power consumption of the device from a "hold" mode consuming 30 m active transmitting range of 8-30 milliamps (or less than 1/10th of a watt).

Taking Mobile Computing Further

Intel is continually striving to make mobile PCs more powerful, easier to use, expensive to maintain. Recent innovations include the mobile Pentium® III pr brings superb performance to state-of-the-art business-suite software, such as 97* or Corel Word Perfect* Suite 8*, and is ready for the demands of advance systems such as Windows NT* 5.0 and Windows* 98. These processors, whic support for the latest manageability technology, comply with Intel's Wired for (WfM) initiative, a hardware standard that allows any management application

Received from < > at 2/12/03 6:17:05 PM [Eastern Standard Time]

Bluetooth Technology

communicate with any WfM-enabled mobile PC . These features enable busin from off-hours maintenance, remote management, and software installation/u simplifying mobile system management and lowering the total cost of ownersh

Bluetooth wireless technology is the next logical step. Probably in the first half Bluetooth wireless technology will be built in to many mobile PCs, mobile tele PDAs. And eventually, high performance Pentium III processor-based mobile to communicate wirelessly with other mobile PCs, connection points to voice o such as LANs, cameras, headsets, and other peripheral devices. For more inf www.bluetooth.com.

Click here to download the lastest Bluetooth* brochure

*Bluetooth is a trademark owned by its proprietor and used by Intel Corporati license.

back to top

* Legal Information and Privacy Policy © 2000 Intel Corporation

what's new?

palowireless.com

bluetooth resource center

quick search

Advanced search

Home
Bookshop
Market Research
Search
Add a Link
Advertising

Bluetooth
Antennas
Asia-Pacific
Cathal's Corner
Consultants
Design Tools
Dev Tools
Downloads
Events
FAQ
Forums
Glossary
InfoTooth
News
Profiles
Products
SIG
Subscribe
Technology
Testing
Training
Tutorial

What is Bluetooth?

What is Bluetooth?

Well it isn't some strange form of tooth decay as you might initially imagine. Bluetooth is the name of a new technology, set to commercia come out in bulk around 2002. It promises to change significantly the we use machines.

1 Take a look around,,,

Look around you at the moment, you have your keyboard connecte the computer, as well as a printer, mouse, monitor and so on.What (It joins all of these together?, they are connected by cables. Cables hav become the bane of many offices, homes etc. Most of us have experie the 'joys' of trying to figure out what cable goes where, and getting tan up in the details. Bluetooth essentially aims to fix this, **It is a cable-replacement technology**

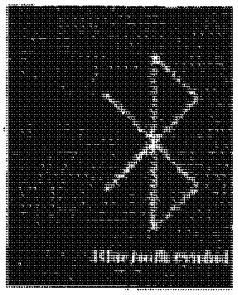

2 How?,

Conceived Initially by Ericsson, before being adopted by a myriad of other companies, Bluetooth is a standard for a **small , cheap radio chip to be plugged into computers, printers, mobile phones, etc.**A Bluetooth chip is designed to replace cables by taking the information normally carried by the cable, and transmitting it at a special frequency to a receiver Bluetooth chip, whic then give the information received to the computer, phone whatever.

3 How about ,,,,,?,

That was the original idea, but the originators of the original idea so

Received from < > at 2/12/03 6:17:05 PM [Eastern Standard Time]

Would you like to receive our e-mail Bluetooth newsletter?

Click here

translate this page
e-lingo

realised that a lot more was possible. If you can transmit information b a computer and a printer, why not transmit data from a mobile phone t printer, or even a printer to a printer?. The projected low cost of a Blue chip (~$5), and its low power consumption, means you could literally p one anywhere.

4 Ideas, Ideas,,,,,

With this viewpoint interest in Bluetooth is soaring, lots of ideas are constantly emerging, some practical and feasible e.g.: Bluetooth chips freight containers to identify cargo when a lorry drives into a storage d or a headset that communicates with a mobile phone in your pocket, o In the other room, other ideas not so feasible : Refrigerator communic with your Bluetooth-enabled computer, informing it that food supply is l and to inform the retailer over the internet.

5 The future, this website,,,,

Whatever the ideas, Bluetooth is set to take off, to be honest its gol be forced down the consumers necks, whether they want it or not,as to many companies have invested in it. This website is generally geared towards the technical issues surrounding Bluetooth, and its implement in real life. But free feel to have a look around, if you're a complete be & you want to know more go to the other pages on the website, the **Download** page has some more general introductions to Bluetooth to download, and the **tutorial** has a reasonably indepth guide to Bluetoot (quite technical though). Also check out the **Resource Center**, **Gloss Knowledge Base** to further continue your Bluetooth education. Enjoy!

6 Looking after your teeth,,,,

By the way if, you're wondering where the Bluetooth name originally from , it named after a Danish Viking and King, Harald Blåtand (Blueto English), who lived in the latter part of the 10 th century. Harald Blåtan united and controlled Denmark and Norway (hence the inspiration on t name : uniting devices through Bluetooth). Old Harald had a inclinatio towards eating Blueberries , so much so his teeth became stained with colour, leaving Harald with a rather unique set of molars. And you tho your teeth were bad,,,

Received from < > at 2/12/03 6:17:05 PM [Eastern Standard Time]

what's new? palowireless.com bluetooth resource center quick search Advanced search

Home
Bookshop
Market Research
Search
Add a Link
Advertising

Bluetooth
Antennas
Asia-Pacific
Cathal's Corner
Consultants
Design Tools
Dev Tools
Downloads
Events
FAQ
Forums
Glossary
InfoTooth
News
Profiles
Products
SIG
Subscribe
Technology
Testing
Training
Tutorial

What Is Bluetooth?

RADIO BASEBAND LMP HCI L2CAP RFCOMM SDP PROFILES

Bluetooth Tutorial

What is **Bluetooth** ? Well you can get lots of different definitions, but essentially Bluetooth is the term used to describe the protocol of a **short range** (10 meter) frequency-hopping **radio link** between devices. These devices are then termed Bluetooth - enabled. Documentation on Bluetooth split into two sections, the Bluetooth Specification and Bluetooth Profiles.

- The **Specification** describes **how the technology works** (i.e the Bluetooth protocol architecture),
- The **Profiles** describe **how the technology is used** (i.e how differe parts of the specification can be used to fulfil a desired function for a Bluetooth device)

The **Specification** is examined first, then the **Profiles**.

Bluetooth Specification Protocol Stack:

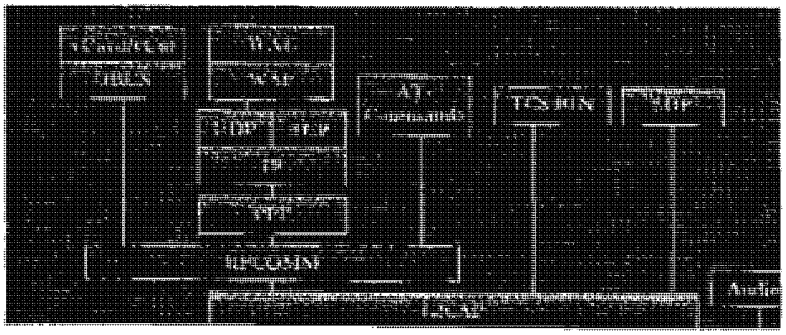

Would you like to receive our e-mail Bluetooth newsletter?

Click here

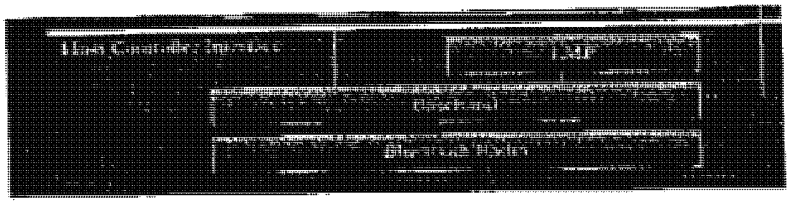

Click on a section of the diagram* above, for a tutorial of its function

translate this page
e-lingo

In more detail: **Bluetooth** is the name given to a new technology using short-range radio links, intended to replace the cable(s) connecting portabl and/or fixed electronic devices. It is envisaged that it will allow for the replacement of the many propriety cables that connect one device to anoth with one universal radio link. Its key features are robustness, low complexit low power and low cost. Designed to operate in noisy frequency environments, the Bluetooth radio uses a fast acknowledgement and frequency hopping scheme to make the link robust. Bluetooth radio module operate in the unlicensed ISM band at 2.4GHz, and avoid interference fro other signals by hopping to a new frequency after transmitting or receiving packet. Compared with other systems in the same frequency band, the Bluetooth radio hops faster and uses shorter packets. The following pages give more detail about different sections of the protocol, or you can view th entire tutorial in one window (for printing purposes).

Specification Table Of Contents: (Complete Specification Tutorial)

1 **Radio**

The **Radio** layer defines the requirements for a Bluetooth transceiver operating in the 2.4 GHz ISM band.

2 **Baseband**

The **Baseband** layer describes the specification of the Bluetooth Link Controller (LC) which carries out the baseband protocols and other low-level link routines.

3 **LMP**

The **Link Manager Protocol** (LMP) is used by the Link Managers (on either

side) for link set-up and control.

4 HCI

The **Host Controller Interface** (HCI) provides a command interface to the Baseband Link Controller and Link Manager, and access to hardware status and control registers.

5 L2CAP

Logical Link Control and Adaptation Protocol (L2CAP) supports higher level protocol multiplexing, packet segmentation and reassembly, and the conveying of quality of service information.

6 RFCOMM

The **RFCOMM** protocol provides emulation of serial ports over the L2CAP protocol. The protocol is based on the ETSI standard TS 07.10.

7 SDP

The **Service Discovery Protocol** (SDP) provides a means for applications to discover which services are provided by or available through a Bluetooth device. It also allows applications to determine the characteristics of those available services.

Have you visited our

Wireless Bookshop yet?

The Children of the World Need Your Help.

what's new?

palowireless.com

bluetooth resource center

quick search

Advanced search

Home
Bookshop
Market Research
Search
Add a Link
Advertising
Bluetooth
Antennas
Asia-Pacific
Cathal's Corner
Consultants
Design Tools
Dev Tools
Downloads
Events
FAQ
Forums
Glossary
InfoTooth
News
Profiles
Products
SIG
Subscribe
Technology
Testing
Training
Tutorial
What is Bluetooth?

RADIO BASEBAND LMP HCI L2CAP RFCOMM SDP PROFILES

Bluetooth Profiles

Bluetooth Profile Structure:

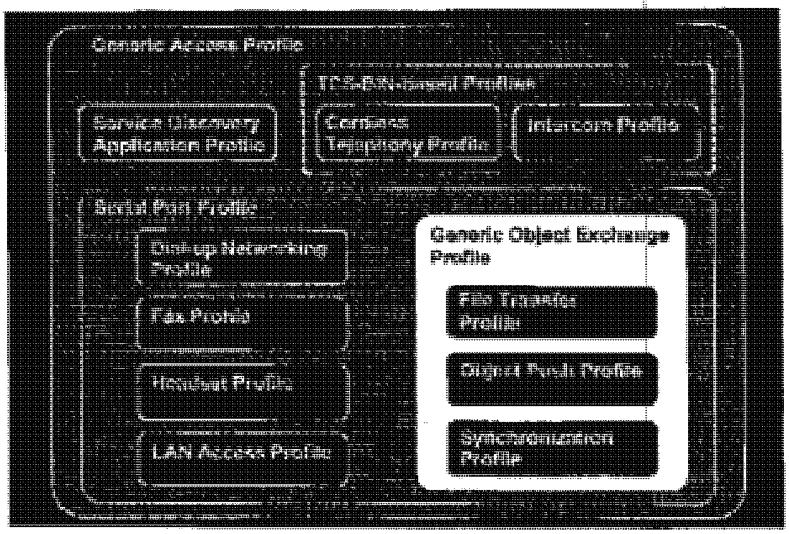

Click on a section of the diagram* above, for a tutorial of its function

The profiles have been developed in order to describe how implementations of user models are to be accomplished. The user models describe a number of user scenarios where Bluetooth performs the radio transmission. A profile can be described as a vertical slice through the protocol stack. It defines options in each protocol that are mandatory for th

Would you like to receive our e-mail Bluetooth newsletter?

Click here

profile. It also defines parameter ranges for each protocol. The profile concept is used to decrease the risk of interoperability problems between different manufacturers' products.

The Bluetooth profile structure and the dependencies of the profiles are depicted above. A profile is dependent upon another profile if it re-uses parts of that profile, by implicitly or explicitly referencing it. Dependency is illustrated in the figure: a profile has dependencies on the profile(s) in whic it is contained – directly and indirectly. For example, the Object Push profil is dependent on Generic Object Exchange, Serial Port, and Generic Acces profiles.

translate this page
Babelfish

Click on a section below for detailed information.

Profiles Table Of Contents

K1 GAP Profile

The **Generic Access Profile** defines the generic procedures related to discovery of Bluetooth devices and link management aspects of connecting to Bluetooth devices. It is the core on which all other Profiles are based

K2 SDAP Profile

The **Service Discovery Application Profile** defines the features and procedures for an application in a Bluetooth device to discover services registered in other Bluetooth devices and retrieve any desired available information pertinent to these services.

K3 CTP Profile

The **Cordless Telephony Profile** defines the features and procedures that are required for interoperability between different units active in the 3-in-1 phone use case. This profile also shows how the use case can be applied generally for wireless telephony in a residential or small office environment,

K4 IP Profile

The **Intercom Profile** defines the

requirements for Bluetooth devices necessary for the support of the intercom functionality within the 3-in-1 phone use case. This is also refereed to as the 'walkie-talkie' usage of Bluetooth

K5 SPP Profile

The **Serial Port Profile** defines the requirements for Bluetooth devices necessary for setting up emulated serial cable connections using RFCOMM between two peer devices.

K6 HS Profile

The **Headset Profile** defines the requirements that shall be used by devices implementing the usage model called 'Ultimate Headset'.

K7 DNP Profile

Not Completed

K8 FP Profile

Not Completed

K9 LAP Profile

The **LAN Access Profile** defines how Bluetooth enabled devices can access the services of a LAN using PPP. Also, this profile shows how the same PPP mechanisms are used to form a network consisting of two Bluetooth-enabled devices.

K10 GOEP Profile

The **Generic Object Exchange Profile** lays the basis (defines the protocols and procedures) for Bluetooth devices necessary for the support of the object exchange usage models. The usage model can be, for example, Synchronization , File Transfer, or Object Push model.

K11 OPP Profile

Not Completed

K12 FTP Profile

Not Completed

K13 SP Profile

Not Completed

Note: for a complete explanation see the actual Bluetooth specs, stored i www.bluetooth.com, or check out the information available in the Documentation page, for overviews etc. on the different layers.

*Diagram Source: Courtesy of Bluetooth SIG, Protocol Architecture, Fig 1 , page5

Have you visited our

Wireless Bookshop yet?

BLUETOOTH VERSUS 802.11

Credit Card Debt Reduction. Let this nonprofit help you lower your credit card debt and interest payments.
If you have $5000 in credit card debt, click here
edebtconsolidation .com
Please click on the banner ABOVE to support our sponsors. Thanks.

By Nick Hunn of TDK Systems

I have predicted that Bluetooth would kill 802.11 and other wireless standards. But Jim Zyren of Harris has argued cogently that simulations show they can co-exist.

I don't dispute that they can operate in the same area, but Bluetooth poses a much bigger threat in terms of price and integration. So, to keep the argument on the boil, let's look at how Bluetooth and its competitors are likely to be implemented.

The question is not really whether the technologies will co-exist, but whether there is a commercial place for both of them. There's little dispute as to which technology is better suited for mobile LAN access – 802.11 was written for this.

Where 802.11 faces a problem is in usability. If we all believe the promise of Bluetooth then we foresee a future where any laptop that wants to connect will include Bluetooth.

In the long term Bluetooth will be built in – in the shorter term it will be added using PC Cards or USB adaptors.

Here there is an interference problem. Although Bluetooth can co-exist with 802.11 or HomeRF over a wider area, they are unlikely to work together in close proximity.

That gives the laptop user a problem – if they want to have both, they need to be able to select one or the other. That's not a solution which many users will get right. Instead they'll get frustrated.

They'll discover that if they remove one or other solution everything works. And that is the problem that heralds 802.11's fate. 802.11 has one purpose in life – wireless networking. Bluetooth on the other hand can do lots. It can work as a lower speed wireless network at a speed that most users will find acceptable. It can also connect up to access points in hotels and in the home.

On the move it can connect to mobile phones. It can

Get FREE ringtones here!
UK & Irish delivery now also available!

Top 10 FREE Downloads This Month

1 Make FREE Calls over the Net
2 Logo Express for Nokia phones
3 MyAnimation for Ericsson A2618s
4 Sagem Explorer for Ringtones/SMS
5 LogoManager for Nokia
6 Commander for Nokia 5/6-series
7 WAP Browser for Palm
8 SmartSMS for Nokia
9 Siemens C/S25 Explorer
10 Mobile Alerts

Click above to support our sponsors
Thank You.

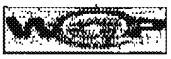

FREE Logo Messaging

Top 10 Logos Code

5041
5438
5247
5437

synchronise with palm format devices. In short it can be used wherever you are – home, office or on the move. It may not do any one solution as well as a dedicated offering, but its overall ubiquity makes it enormously powerful.

Users don't want to carry around multiple devices. And that's why I believe it will ultimately win.Price will also play its part. Bluetooth is designed to be cheap.

Other wireless technologies don't have the cost reduction opportunities of Bluetooth, and more importantly don't have the breadth of applications to drive the price down. Bluetooth benefits from a range of applications across electronics, telecoms, automotive and computing which ensures that it will always be significantly cheaper than 802.11.

It makes it easier to make the decision to integrate it. And as soon as Bluetooth inveigles its way onto the motherboard, the fate of other 2.4GHz standards are sealed.

Once this happens higher speed wireless networking has as number of routes. Either it can find another frequency, another standard can be adopted (and here HiperLan will be a strong contender), or Bluetooth itself can reinvent itself in a future revision as a high speed network solution. Alternatively the two technologies may find a way of coexisting by using Bluetooth to 802.11 bridges.

In the short term 802.11 solutions will ship. They already are. But that's no guarantee of success. 8 track cassettes and BetaMax shipped until users found more convenient solutions. Bluetooth offers a similar convenience. There's a place for 802.11, but I believe that time will confine it to wider area solutions outside the PC environment.

This article first appeared in Incisor, the Bluetooth newsletter. Contact Vince Holton at vholton@click.co.uk : Telephone: +44 (0)1256 701646

More On Bluetooth...

What Is Bluetooth?

Latest Bluetooth News:
Cylink Secures Bluetooth Transmission Technology
1.4 billion Bluetooth units by 2005
EU Bluetooth Market Poised To Grow

Technical:
-The Ericsson Bluetooth Development Kit
-Preventing radio interference with Bluetooth
-TDK Bluetooth Product Range
-Who was King Harald Bluetooth?
-Download Bluetooth Specification v1.0 (PDF file)
-Bluetooth vs 802.11 specification for wireless networking
-WAP-enabled GSM mobile phones

5181
5439
5266
5029
5356
5379

See 600 More FREE Logos....

To have these and over 600 new logos delivered to your GSM phone LIVE VIA SMS NOW. Input the 4-digit code when asked.

Call +27-82-232-8100
[082-232-8100 within SA]

Within UK:
Call +44-9060-134-134 now!
[09060-134-134]

Within Ireland:
Call 1570-123-605!

And now you can now even draw your OWN logo to send to your or a friends phone!!

Buy Motorola Phones

Click HERE to buy a Handspring Visor NOW!

Latest News

Industry News
Vodacom reaches 4 million users
CWU opposes Telkom privatization
Thuraya Satellite launched
Oz Phone Users Up 9.1% 3Q00
MTN Installs Tunnel Links
Oz users recycle old phones

WAP/M-Commerce
Siemens Joins MeT Forum
Java Will Displace WAP – Gartner
Digital Signature Toolkit Unveiled
Oberthur Launches First 64K SIM

Mobile Data/Bluetooth/GPRS/3G
Ericsson UMTS network for Xfera
Italy Damages After 3G Auction?
Swiss delay 3G auction

BLUETOOTH VERSUS 802

Bluetooth Hardware:
·Motorola 270c CDMA
·Ericsson R520 Bluetooth/WAP/GPRS/Triband
·Ericsson T36 Bluetooth/WAP/HSCSD/Triband
·Alcatel OneTouch 700 GPRS, WAP, Bluetooth
·TDK Bluetooth Product Range
·Bluetooth Cellphone Silencer
·Bluetooth-enabled Nokia 9110 linked to a FujiFilm digital camera
·Ericsson Bluetooth GSM Headset
·Ericsson Communicator

Search For More On...

bluetooth

Financial
Ericsson Scraps T36 Phone
Nokia's EMA network partners

*News Archives

MORE....

Latest FREE Downloads:
REALpswi WAP Gateway Server
Midi2C6 Linux Siemens tune-maker
Message Master for Windows CE
DotWap for making WAP pages
ChipIt SIM editing software
eMail SMS for Vodacom/MTN SA
FoneSync for Nokia 7110
MoTone ringtone maker for Sagem

New Hardware:
·Siemens S40 Triband/WAP
·Nokia 3310
·Samsung SCH-V200 with camera
·Panasonic DG93 WAP
·Siemens SL45 MP3/WAP
·Philips Azalis 238
·Sony CMD-J5 WAP
·VisorPhone GSM for Handspring
·Hitachi C408H CDMA Colour WAP
·Motorola Accompli 009
·Solar Phone Battery Charger
·Siemens A35
·Motorola v2282 WAP
·Motorola v8088
·Motorola L7389e
·Samsung CDMA Video Phone
·Motorola P7689 WAP
·Motorola M8088

Technology Briefings:
·CDMA digital cellular
·GSM Global Statistics
·What's inside a mobile phone
·Mobile Commerce
·WAP Developers Forum
·WAP-enabled GSM phones
·High Speed Data Over GSM
·OnLine WAP Browser
·Bluetooth short-range radio
·Location Finding via GSM
·GSM Billing Procedures
·Full listing of new GSM Phones
·Mobile Etiquette
·IMode Wireless Internet
·WAP-enabled web sites

Free Services:
- 400+ GSM Software Downloads
- Online Nokia 7110 WAP Browser
- 12 Discussion Forums
- Send SMS
- Free Email
- Free US Stock Quotes
- Lotto Line - SA results Via SMS
- DateLine - meet your ideal date

Advertisement

VERY URGENT SALE.
ALL OFFERS CONSIDERED!
"35 Ericsson AMPS Base Stations &

Controllers"

Credit Card Debt Reduction. Let this nonprofit help you lower your credit card debt and interest payments.
If you have $5000 in credit card debt, click here *debtconsolidation .com

Please click on the banner ABOVE to support our sponsors.Thanks.

To get over 600 new Ringtones, call +27-82-23-28-100 now!
To get over 600 Logo Messages, call +27-82-23-28-100 now!
UK: To get 600+ new Ringtones/Logos, call +44-9060-134-134 now!(UK-only number)
Ireland: To get 600+ new Ringtones/Logos, call 1570-123-605 now!(Ireland-only number)

Click to your own [redacted]

Home|Search|Free Services|Advertise Here
Ringtones|Picture Messaging|Logo Messaging
Online Store|Free Downloads|What's New|GSM Guide
Send SMS|Mobile Data|WAP|mCommerce|Phones|Quiz
Mobile Office|GSM Secrets|Operators|New Products|Forums
Mobile Stats|Glossary|News|CDMA|GSM Technical
Mobile Satellite|Bluetooth|Africa|Site Survey|
Contact Us

Bookmark This Site

[redacted]
"Terms of Usage & Copyright notice" (more...)
Accessing any pages indicates that you agree to the terms of the Terms of Usage & Copyright notice
© AC 1998-2000

[redacted]

Bluetooth vs. Airport (802.11 Network)

Original Post: Bluetooth vs Airport Date: 2000-02-23

How does Bluetooth compare to Airport (Apple's 802.11 wireless prod now in use). Airport apparently is 10 MB/sec, 50 meters, 10 active dev Bluetooth's 1MB/sec, 10 meters, 7 active devices. Apples and orange Are they competing technologies? complimentary? Different views bel

For more details see this article: 802.11 vs. Bluetooth. However a slig towards Bluetooth.

Eventually this discussion shows that Airport (802.11) has a faster tra rate, and technologically more advanced, while Bluetooth is cheaper, possibly more rugged and smaller, capable of being used anywhere. I personally think it all depends on what you want them to do.

- Date: 2000-02-23 As I read this article, I suspect a bias toward Bluetooth and against Airport plays a role. (This IS the Bluetooth after all.) I'm trying to filter out bias and guess the future. We ha Airport in our machines at home and at school, and it's wonderful don't sense that there are things that Airport can't do that Blueto can, as the article claims. Everything that the article says Blueto do I see Airport being able to do too. Are there real limitations to that Bluetooth avoids? Technologically, Airport already looks su In those uses that I, a commoner, would use it for, which is conn to the world around me on the fly and casually, daisy chained an flexibly. If my airport is doing that now, why is it that Bluetooth wil the only one able to do that in the future? I don't get it. The argu about cost is meaningful, if the facts are correct. Is Bluetooth che to put on the motherboard than an 802.11 device, or take up mor estate, or more power? Why? I wouldn't think the difference in el one would preclude any evolution of one any different than the o this just one technology trying to bully the other out of the "airwa As a user, I really don't care which one wins, as long as it's the b result, not just the biggest. But for my uses, the specs as merely

Bluetooth vs. Airport (Apple 802.11 Network)

Would you like to receive our e-mail Bluetooth newsletter?

Click here

translate this page
Powered by Google

promised by Bluetooth look inferior to the 820.11 device I'm alre using today, right now, as I type this. Won't I have to step down i capability if bluetooth wins the day? I'd be willing to be talked out point of view. I have no product loyalty here. But I detect more s hype than substance in this Bluetooth thing, while I experience substance with the 820.11 device I use every day. The question Bluetooth's transmission compatibility or incompatibility with exis equipment is no small issue. Bluetooth needs to be compatible w Airport, then the best will emerge. I'll be happy with that. So the question still stands, how does Airport and Bluetooth compare. Substance, please. We need to know. Anyone?

- Date: 2000-02-23 From the information I have read on the subje have seen there is no comparison between Airport and Bluetoot Airport is a stuck technology, they are into LANs, they have mor power there and may hold their own against Bluetooth. Bluetooth the power to be introduced into any thing, absolutely anything ou that is slightly computerised. Imagine if you will, you are in your Math class, you bought your brand new graphical calculator with new Bluetooth operation in it. Your Math class has a Bluetooth 's in it that holds all sorts of possible math calculations or even for and programs useable by your calculator, that the teacher or via downloading off the web can accomplish and be introduced into t classroom. Your calculator once brought into the room starts a download of all sorts of neat features and formulas. This is just a of what can come of this product, it isn't stuck on PCs, PCs are g go from what they are now to something completely different in t 50 years. I apologise if I offend anyone it is not my intent I am ju trying to show what the 'comparison' would be.

- Date: 2000-02-23 I think that you are saying that Airport consum much power compared to BT. I found today my first comparison, said that Airport was 10 times the transfer rate and distance of Bluetooth, and that may account for it's power consumption, perh 10*10=100 times the power, when transferring. A CPU would ne so bluetooth might not meet a computer's needs, but might fit bet than airport into low-energy devices. I see apple yesterday anno plans to incorporate bluetooth via 3rd party cards in its systems. years pass, I'd think that the need for greater transfer capacity a greater range would grow very fast while power problems would as a barrier. Each should fill their respective niches, but i'd doubt will be around in 50 years.

Bluetooth vs. Airport (Apple 802.11 Network)

The Children of the World Need Your Help.

Thomas Weisel Partners
MERCHANT BANKING

Application Anywhere

A Weekly on Wireless Infrastructure and Data Services

November 28, 2000

Matt Finick mfinick@tweisel.com 415.364.2577
Trevor Caldwell tcaldwell@tweisel.com 415.364.5859

Personal Digital Assistants

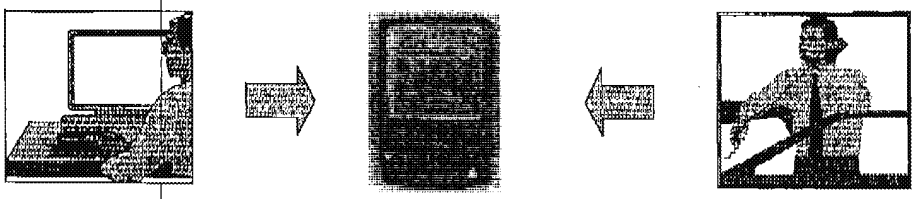

Source: Thomas Weisel Partners

As the PDA market continues to develop, we believe that the convergence of voice and data and subsequent applications will increase the utility of the personal companion platform.

In this Issue...

Personal Digital Assistants and the Convergence of Voice and Data

- A look at the current PDA landscape. (Page 2)

Wireless Infrastructure and Data Services Index and Comps

- A closer look at the Wireless Infrastructure and Data Services Index stocks. (Page 3)

Wireless World Industry Highlights

- News that effects the wireless infrastructure and wireless data services industry. (Page 4)

Received from < > at 2/12/03 6:30:05 PM [Eastern Standard Time]

Santa's no longer using paper...it's all digital

A PDA in every stocking for Christmas? To be blunt, not unless Santa can alleviate the product shortages of the RIM (RIMM: Not Rated) and PALM's (PALM: Not Rated) next-generation devices. This may lead to some market share growth for other competing products, but we believe that, ultimately, these two companies control the dominant mindshare. Connectivity is probably just as important as getting the devices. From time to time, we have harped on poor voice network coverage. We note that capacity constraints in paging networks (specific networks to remain nameless) have resulted in slow delivery of messages. While Christmas could be the next big near-term catalyst for revenue growth, we note that Europe could be another catalyst in early 2001 for growth. We believe that RIM will be launching a GPRS solution in Europe in 1H01, which could strongly position the company if GPRS launches on schedule.

Convergence of voice & data: who will win? In the emerging wireless data market, there are two main end-user devices driving access: PDA/pager and cell phones. Each category has both positives and negatives. PDAs have richer clients due to the fact that they have more memory/processing power and, we believe, better input interfaces. Cell phones are mass market devices that already have a multi-million device footprint but that have only limited memory/processing power and a predominantly voice interface. We believe that, over the next several years, device functionality will converge, but that individuals will choose the device that best serves their specific requirements.

Device client footprints will begin to converge. One of the main strengths for PDAs is the relatively robust client/OS that enables rich features. Cell phones have always been envisioned as having a "thin client," but we believe that this will evolve as cell phones begin to have resident clients to perform basic logic. We continually hear the word "Java" in these discussions, so we believe that Java may have found a home outside of Starbucks.

Four main competing device manufacturers at present. To date, there are four main equipment OEMs that have gained mindshare in this market (please see the table below). All have slightly differentiated strategies, but we believe that, in the longer term, functionality will converge. We believe that the following variables are differentiating factors for these solutions.

- **Primary application/functionality.** All of the above handhelds have personal information management (PIM) functionality, which includes calendar, address book and "to do" lists. RIM's functionality is differentiated because all of those items are real-time. In addition, the RIM offers real-time email access that syncs wirelessly. The high-end Palm handheld offers wireless internet access in addition to PIM functionality, as do Pocket PC-based handhelds.
- **Transmission methodology.** The greatest differentiation in this category is whether or not the handheld is "always on". All of the RIM handhelds can be used anytime, anywhere

Competitive Landscape for the PDA Market

	RIM	Palm	Handspring	Microsoft
# of PDA product iterations	4	5	4	4 OEM Manufacturers
total est. units shipped as of the end of the most recent quarter	200K	5.7mn		
est. # of subscribers at most recent Q-end*	76K	NM	NM	NM
Primary Application Functionality	Real-time PIM-Calender/Contacts/Email access	PIM-Calender/Contacts, Wireless Internet Access	PIM-Calender/Contacts	PIM-Calender/Contacts, Wireless Internet Access
Does it sync wirelessly?	Yes	only Palm VII	Modem Required	Modem Required
Primary input technology	keyboard	handwriting recognition	handwriting recognition	handwriting recognition
Network	BellSouth Wireless Data Network/Motient's Data Network/modems	BellSouth Wireless Data Network/modems	NM	NM
Memory Storage Capacity/Price	High end-RIM 957: 8MB Flash, 512 Kbytes SRAM;	High end-PalmVIIx: 8MB	High end-Visor Prism:8MB	High end-32MB
	Low end-RIM 950: 4MB Flash, 512 Kbytes SRAM	Low end-Palm m100-2MB	Low end-Visor Solo:2MB	Low end-16MB
Price Range	$499-$599	$499-$149	$449-$149	$549-$479
Monthly recurring revenue stream	Yes	Yes	No	No
Operating System	proprietary-Blackberry 2.0	Palm OS	Palm OS	Windows CE
Availability	North America	Globally	Globally	Globally
Primary Customer Segment	Enterprise	Consumer/Enterprise	Consumer	Consumer/Enterprise
Primary Distribution Network	VARS including Aether Systems, Microsoft VAR Network, etc.	Web, Brick & Mortar, VARs,etc.	Web, Brick & Mortar, VARs,etc.	Microsoft VAR Network, Web, Brick & Mortar, etc.

*est. # of Blackberry subscribers at the end of 2Q01

Source: Thomas Weisel Partners and Company Reports

Received from < > at 2/12/03 6:30:05 PM [Eastern Standard Time]

(within the network's coverage area) using a paging network, enabling real-time access to contacts and calendar items. Email is automatically "pushed" to the user in real time, network willing. In a secure framework that seamlessly extends information from the corporate intranet. There is no need to dial in to a server. The other handhelds do not offer "always on" access. They transmit information via a modem, which requires good network coverage when dialing in. The high-end Palm model offers wireless internet access on an "always on" network, but the user needs to submit a query to receive information. Information is not "pushed," it is "pulled" to the user.

- **Input methodology.** Handhelds use two main input methods. The majority of handhelds, including the Palm and Pocket PC-based handhelds, use handwriting recognition. Specific handwriting strokes will input letters, numbers and symbols. Most strokes are fairly similar to the corresponding handwritten stroke, but this input method does require the user to learn some new strokes. The RIM handhelds use a standard QWERTY keyboard for input. This makes inputting information intuitive and easy. There is also a thumb wheel for navigation, which is also easy to use.
- **Primary customer segment.** Most of the PDAs market to both the enterprise and consumer market. However, the Palm OS and Pocket PC-based handhelds tend to sell more to consumers than to enterprises. We believe that this is because they offer more consumer-friendly options, like games, MP3 player add-ons and a wide range of free, downloadable software from third-party developers. RIM's PDAs, on the other hand, market more to enterprise customers. We believe this is because RIM devices enable individuals to access mission-critical information from the Intranet in a secure and synchronous environment. This access does not compromise the corporate firewall, making this solution very attractive for enterprise customers. Also, email is an essential tool for mobile workers, and we believe that RIM offers the best email solution of all the handhelds in today's market.

Device functionality is converging. There has been a recent trend among phone and PDA manufacturers to converge voice and data functionality. Some of these efforts are in the form of partnerships. For example, Motorola (MOT: Not Rated) and Palm plan to produce a line of "smart phones" that will combine Palm's operating system, Web clipping service and handwriting technology with Motorola's voice technology. Kyocera recently unveiled the Smartphone, its version of the PDA and cell phone combination. It is bigger than most cell phones but offers three modes for Internet access. It supports HTML, WAP and Palm's Web Clipping. It also has a built-in version of Eudora email. Handspring has taken the same idea and created the VisorPhone. The phone is a Springboard module that is added to the Visor PDA. Microsoft (MSFT: $67.00, rated MARKET PERFORM by TWP Analyst David Readerman) is also developing a smart phone, named Stinger, that combines PDA and cell phone capabilities and will use the Pocket PC platform.

Additional information is available upon request.

Thomas Weisel Partners LLC ("TWP") may from time to time perform investment banking or other services for or solicit investment banking or other business from, any company mentioned in this report. For the securities discussed in this report, TWP usually makes a market and may sell to or buy from customers on a principal basis. TWP, or any individuals preparing this report, may at any time have a position in any securities or options of any of the issuers in this report. Although the statements of fact in this report have been obtained from and are based upon sources TWP believes to be reliable, we do not guarantee their accuracy, and any such information may be incomplete or condensed. All opinions and estimates included in the report constitute TWP's judgment as of the date of this report and are subject to change without notice. This report is for informational purposes only and is not intended as an offer or solicitation with respect to the purchase or sale of a security. This report does not take into account the investment objective, financial situation or particular needs of any particular person. Investors should obtain individual financial advice based on their own particular circumstances before making an investment decision on the basis of the recommendations in this report.
In the UK this document is not intended for and may not be distributed to or passed on, directly or indirectly, to Private Customers.
Thomas Weisel Partners International Limited, regulated by SFA, is the issuer and approver of this document.
[1] Thomas Weisel Partners makes a market in the security mentioned in this report.
[2] Thomas Weisel Partners was a manager or co-manager of the most recent public offering of the company mentioned in this report.
[3] Thomas Weisel Partners may have a position or own options in the security or any individuals preparing this communication have a position or own options in the security.
[4] Thomas Weisel Partners and any of member, affiliated member, or employee is a director of the issuer.
Thomas Weisel Partners LLC, 2003. All rights reserved. Any unauthorized use, duplication or disclosure is prohibited by law and will result in prosecution.

Received from < > at 2/12/03 6:30:05 PM [Eastern Standard Time]

Wireless Infrastructure and Data Services Comparative Valuations

	Ticker	Price 11/26/00	52 week H/Lo	Ent Value	Sales C00E	Sales C01E	Ent Val / Sales C00E	Ent Val / Sales C01E	Implied CAGR	Off High	Weekly Change (fr prev Tues)
Aether Systems*	AETH*	$58.63	$345-50	$1,903	$50.3	$125.6	37.9x	15.2x	40.0%	83%	-28%
AvantGo	AVGO	$5.75	$26-5	$249	$14.7	$27.7	16.9x	9.0x	30.1%	78%	-5%
Datalink.net	XLNK	$4.06	$48-1	$43	$3.4	$19.0	12.6x	2.2x	2.2%	91%	-19%
I3Mobile	IIIM	$4.25	$33-4	$4	$5.2	$11.4	0.8x	0.3x	NM	87%	-18%
Infospace[1,2]	INSP*	$12.00	$139-12	$3,729	$209.0	$380.5	17.8x	10.3x	29.7%	91%	-16%
OmniSky	OMNY	$8.81	$24-7	$429	$8.1	$58.3	52.9x	7.3x	35.4%	63%	-25%
Openwave[1]	OPWV*	$48.88	$208-50	$8,784	$276.5	$577.8	31.8x	15.2x	44.8%	77%	-29%
Palm	PALM	$37.22	$165-20	$20,213	$1,537.6	$2,679.8	13.1x	7.5x	45.4%	77%	-20%
Puma Tech	PUMA	$7.69	$102-7	$231	$33.5	$51.9	6.9x	4.5x	13.1%	92%	-8%
Research in Motion	RIMM	$66.25	$178-23	$4,175	$137.8	$288.8	30.4x	14.5x	64.4%	62%	-23%
724 Solutions[1,2,3]	SVNX*	$19.69	$240-16	$1,334	$21.5	$48.7	62.1x	27.4x	68.4%	92%	9%
SignalSoft	SGSF	$9.13	$61-7	$127	$12.7	$31.0	10.0x	4.1x	11.2%	82%	6%
Average							24.4x	9.8x	34.9%	81%	-14%

Source: IBES, First Call, and (*) Thomas Weisel Partners LLC estimates

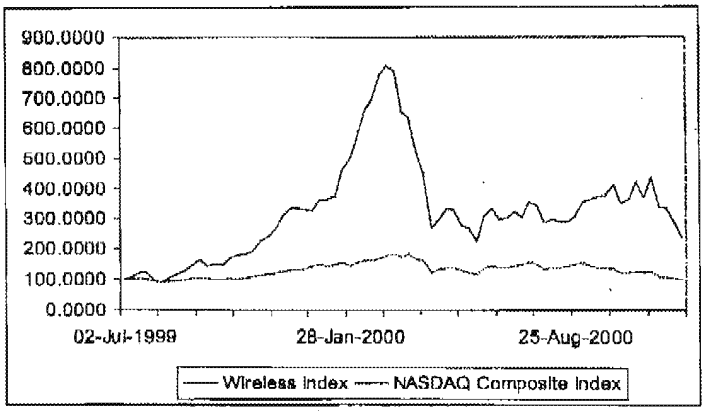

** Our Index is market cap weighted and includes Aether Systems[1] (AETH: Buy), Datalink.net (XLNK: Not Rated), Infospace[1,2] (INSP: BUY), i3 Mobile (IIIM: Not Rated), Phone.com[1] (PHCM: Buy), Puma Technologies (PUMA: Not Rated), Research in Motion (RIMM: Not Rated), SignalSoft Corp (SGSF: Not Rated), 724 Solutions[1,2,3] (SVNX: Strong Buy) and Software.com (SWCM: Not Rated).*
We have added AvantGo (AVGO: Not Rated) and OmniSky (OMNY: Not Rated) to the Index.

Received from < > at 2/12/03 6:30:05 PM [Eastern Standard Time]

Wireless World Industry Highlights

Nokia[2] (NOK: $42.00, rated BUY by TWP Analyst John Todd) unveiled the 9210 Communicator. The company expects the GSM phone to be available in 1H01. Highlights of the phone include a color display, support of the Java language and a Symbian EPOC OS. It will also be equipped with the Nokia File Viewer, an application that allows attachments from emails to be read.

Research In Motion and BellSouth (BLS: Not Rated) Wireless Data make a new deal. RIM will supply 75,000 RIM 950 Handhelds and 75,000 RIM 957 Handhelds to BellSouth. BellSouth already sells other RIM devices to individual and enterprise user for use on the BellSouth Data Network.

GPRS roll out in Hong Kong. The 2.5G service is being rolled out in Hong Kong by six mobile operators. However, it is not being hyped because the operators don't want expectations to be too high, as they were globally for WAP. The maximum data download rate for the GPRS handsets will be 26.6 Kbps. Carriers in other Asian countries and some in Europe are also quietly rolling out GPRS.

Nextel (NXTL: Not Rated) launched a four-in-one service in two cities. One cell phone has the digital cellular service, two-way radio, wireless Internet and text/numeric paging.

Iceland now has the largest cell phone penetration in the world. Iceland recently surpassed Finland, the former country with the highest cell phone penetration. It is estimated that 78% of Iceland's population carry mobile phones. Iceland is also among the top three in Internet usage.

A PDA for your teen. Cybiko, Inc. produces a wireless entertainment and communications device that is marketed towards the youth segment of the population. Cybiko has instant messaging, interactive multi-player gaming and some basic personal information management (PIM) applications. It also has an MP3 card, QWERTY keyboard and stylus.

Location-based Data for PDAs. YadaYada, in collaboration with go2 Systems, will provide PDA users with wireless location-based directory and information services. YadaYada operates a personalized Web portal for PDAs.

AT&T Wireless[1] (AWE: $18.81, rated BUY by TWP analyst Jim Linnehan) chooses go2's location-based directory and information services for its Digital PocketNet Service.

Received from < > at 2/12/03 6:30:05 PM [Eastern Standard Time]

NOKIA
CONNECTING PEOPLE

Search

Nokia 9000i digital

Service providers, rate plans, phones and prices in your area:

Enter your 5-digit zip code: find now

Personal portable office.

The Nokia 9000il Communicator has broken new ground in an industry that sets records everyday. By fully integrating a GSM 1900 digital phone, a personal organizer, fax capabilities, data and messaging services, as well as Internet access into one compact device, the Nokia 9000il Communicator allows you to be fully connected and get things done regardless of your location. When you are back at the office or at home, the Nokia 9000il Communicator can quickly and easily sync-up with the standard calendar programs and other applications on your PC. The Nokia 9000il Communicator doesn't stop at connecting you to your PC, but also allows you to connect to your company's network whether you need to check information in company databases or pick up your e-mails.

Internet

- Send and receive e-mail
- WWW browser
- Telnet

Fax

- Send and receive faxes
- Cover page options

Applications

- PC Connectivity for file transfer and backup via cable or infrared

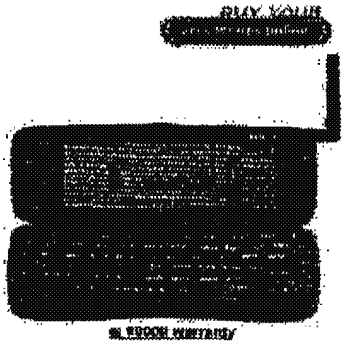

"The supreme connectivity device, the Nokia 9000 Communicator is as close as you can get right now to the 'Beam me up, Scotty'."
—*Computer Life*, February 1998

Caller ID
Voicemail capability
Short message service
Dialed, received, missed calls
Numeric paging capability
One-touch credit card dialing
Clock with alarm
Keypad lock
On-screen battery indicator
Fax
E-mail
Phone book
Internet browser
Ring tones

- Synchronize with your ACT! database and many other applications
- Connect to printer via cable or infrared
- Upload and download contacts
- Personal calendar
- Address book
- Scheduler with alarm
- Remote calendar appointment booking
- To-do list

Digital Data
SIM
Business Card
Message Indicators
Mobile Originated SMS
Multi-party calling

Full Featured GSM 1900 Digital Phone

- Backlit display
- Credit card calling
- Voicemail
- Hands-free speakerphone
- Conference call up to 6 persons

Service

- GSM 1900
- Sold by:Pacific Bell Wireless, Powertel.

Nokia 9000il power management

9000il	Talk Time		Standby Time	
Battery Type	Analog	Digital	Analog	Digital
Extended Li-Ion Battery (BLK-4S)	N/A	up to 3h	N/A	up to 30h

Nokia 9000il accessories

	Extended Li-Ion (800mAH) Battery BLK-4S Advanced Lithium-Ion technology provides maximum talk and standby times in a lightweight package. Details ▶	$118.00
	Rapid Travel Charger ACH-4UC Lightweight travel charger provides rapid charging and is perfect for people on the go. Details ▶	$39.95
	Battery Charging Stand DCH-4 Charges a spare battery while keeping your phone free to use. This item has been discontinued and is only available in limited	$54.00

	quantities. If this item appears "out of stock" when added to your cart, it means that the item is no longer available through NokiaUSA.com. We apologize for any inconvenience this may cause.	
	Battery Charging Stand [Charger Sold Separately] DCH-6A This simple stand offers an easy place in which to charge your phone.	$19.00
	Complete Car Kit CARK-103 Advanced kit combines the convenience of handsfree with optimal sound quality.	$259.00
	Privacy Handset HSU-1 Optional handset provides a convenient privacy option when attached to a Complete Car Kit.	$59.00
	Leather Carry Case CBR-6 Genuine leather case covers your phone and keypad while offering a convenient belt clip. Strap not included with case.	$24.00
	Adapter Cable DLR-1 Connect the Communicator to a PC either through the infrared link or this RS-232 Adapter Cable.	$9.00

Car installation Kits must be installed by qualified personnel. Check with your dealer for availability. For NiCd (Nickel Cadmium) batteries: To achieve full battery capacity, new batteries must be charged with the phone off for at least 24 hours before initial use. For all other batteries: Note that a new battery's full performance is only achieved after 2-3 complete charge and discharge cycles. For Vibrating batteries: Note that the battery does not vibrate when the phone is connected to or placed in any charging device. Warning: We recommend using only Nokia approved accessories (including batteries). The use of unapproved accessories that cause damage may invalidate the warranty applying to the wireless phone.

9000il Features & Benefits / 9000il Warranty & Services / Return to Mobile Phones back to top

3 ways to buy:

Order Your Accessories Online
To order an accessory online, click on the "add to cart" button under any accessory above.

Order Your Accessories by Phone
You can order your accessories for your Nokia phone by calling the NokiaUSA Order Center at 1-**888-256-2098.**

Buy Your Accessories at a Local Store
Many cellular phone stores and retail stores carry Nokia Original Accessories. To find a store near you that sells Nokia phones, enter your zip code and click "find now." Please call first to make sure they carry the accessory you wish to purchase.

Enter your **zip code:** [ ] find now

View another phone model: Model # [redacted]

Limited Warranties
Nokia Original batteries, data cables and software have a 1-Year Limited Warranty. Nokia Original car kits and headsets have a 3-Year Limited Warranty. All other Nokia Original Accessories have a Lifetime Limited Warranty. The Nokia Xpress-on™ color covers and Nokia loopset have a 1-Year Limited Warranty.

Home | Privacy Policy | Order Terms of Sale | Site Terms (& Legal Policy) | Site Map
Nokia Mobile Phones, Inc. 6000 Connection Dr. • Irving, Texas 75039 • 1-888-665-4228 Copyright © Nokia 2000.

C19

Handspring Hopes Device Is 'Killer App'

By Pui-Wing Tam
Staff Reporter of The Wall Street Journal

THE RACE for the next "killer app" in electronics—a combined cell phone and handheld organizer—is on.

Earlier this week, handheld computer maker Handspring Inc. leapt into the chase for this dream device when it unveiled VisorPhone, the culmination of more than 18 months of top-secret research and labor. VisorPhone, essentially a cell-phone attachment that slots into a Handspring Visor machine, instantly transforms the handheld organizer into a double-whammy: An address book and appointment keeper that also acts as a mobile phone and short-text messaging device.

"I believe that every handheld computer will have cell phone capability in the future," says Jeff Hawkins, Handspring's chief product officer and the creator of the original Palm Pilot. "In the end, people are going to want just one device."

Information about VisorPhone will be posted up on Handspring's Web site next week, but the company won't take orders until later this year.

The introduction of VisorPhone—the first time that a U.S. handheld device maker has tried to wed the handheld organizer with a mobile phone—underscores the versatility of the handheld computing platform. While many skeptics once wrote off handheld devices as a passing fad, new applications, like Handspring's cell-phone module, are beginning to make the gadgets an increasingly commonplace tool.

VisorPhone,
Handspring's cell-phone attachment

The rapidly emerging handheld market is looking much like the one for the PC in the early days. Sales are expected to grow at the rate of about 40% a year, according to ING Barings, with shipments expected to jump from several million devices a year to the tens of millions. And just as software developers raced to find so-called killer applications like desktop publishing and spreadsheets for the personal computer, a multitude of companies are now rushing to find the killer app for the popular Palm-like devices.

"The issue of creating a combination device is the next challenge in the portable computing frontier," says Tim Bajarin, president of Campbell, Calif., consulting firm Creative Strategies Inc. "And whoever gets it right may lead the charge into next-generation devices."

Still, Handspring faces a big risk by betting on the addition of wireless voice to its machines—even at the low price of $299. Several mobile phone makers and telecommunications firms, including Nokia Corp. and Qualcomm Corp., have already attempted to fuse their cell phones with their handheld organizer. But their efforts—remember the Nokia Communicator and Qualcomm PDQ phones?—made little impact, largely because of the clunky sizes and the $800-plus prices.

Mr. Hawkins decided to forge ahead with the project. "A lot of people internally said that wireless voice has been done already, but it's all about doing it better," says the lanky 40-year-old executive. "I wanted to do a killer application that would work right now."

Plenty of obstacles blocked his vision, however. For one, Mr. Hawkins and his young team had no experience in building a mobile phone from scratch. "The whole thing took a while," he concedes. So Mr. Hawkins sought help. His first action was to hire Jerry Tu, an expert in the global systems, or GSM, communications standard. Mr. Tu had other staff recommendations and Handspring slowly built up a core team of about five engineers and designers. To protect their operation from the outside world, the group assigned their project the code name "Gumby."

By early 1999, the Handspring team had started tackling the question of which global telecommunications system to use—GSM or code division multiple access, or CDMA. Handspring held discussions with CDMA giant Qualcomm, among others, says Mr. Hawkins. But the group ultimately settled on the GSM standard, which is widely followed in Europe and to a lesser extent in the U.S. The new phone, though, will still be able to talk to non-GSM phones in the U.S.

Next came the difficult part: Designing the software for a mobile-phone system and the hardware for a plug-in attachment. By mid-1999, the Handspring team were locked in two-hour design meetings three times a week. Starting with a blank slate, the group decided to focus on the basics: What should the cell-phone module look like? What kind of features should it encompass?

The team decided to take advantage of the large screen of a handheld computer to create a user-friendly interface. Instead of having to tap in a phone number, Mr. Hawkins suggested that consumers be

Please Turn to Page B8, Column 1

Continued From Page B6

able to dial directly from phone numbers already entered into their handheld computer's memory bank. A feature that could bring up a detailed log of phone calls made, taken or missed was included. Buttons for three-way calls and hanging up were made. And five screen pages of speed dials that could easily be accessed came next.

Meanwhile, Mr. Hawkins and the team were also searching for a partner to design the hardware attachment itself. The group already had a design for "Gumby" in mind: a small circular plug-on with a stubby antenna sticking out of it that could easily slot into the Visor handheld computer. "Since other phones that had been merged with handheld organizers had failed, I didn't want ours to look like a phone," Mr. Hawkins says. "I wanted it to look like a handheld computer."

Handspring executives found a hardware partner in mid-1999: A small Belgian radio company called Option International, located just outside Brussels. Mr. Hawkins quickly traveled to Belgium to seal the deal and Option assigned a team of about eight engineers to "Gumby." By early this year, the mechanical design was complete and Handspring began to receive preliminary working prototypes.

But a scare still lay ahead. "Operation Gumby" was nearly derailed a few months ago when a summer intern at Handspring mistakenly blabbed the code names of several internal company projects during a visit to a crowded Silicon Valley restaurant. The gaffe was promptly picked up by an eavesdropper and posted on the Internet. In a panic, the Handspring team quickly changed code names and renamed their project "Sparky."

Even Mr. Hawkins was a security risk. At his dentist's office several weeks ago, he pulled out his handheld organizer, with new VisorPhone attached, to make a phone call. "Are you making a phone call using your organizer?" the receptionist asked him. He mumbled a response and walked away.

Mr. Hawkins says he doesn't know whether VisorPhone will be a success, but notes that if the gizmo sells just 100,000 units he will consider it a hit. Even if VisorPhone isn't embraced by the public, however, he says he intends to continue focusing on the convergence of the handheld organizer with the mobile phone. "Later, I'll add data and e-mail and I'll make the machine even smaller," he says. "I can build over time the wirelessly enabled handheld device, with voice and everything."

Received from < > at 2/12/03 6:30:05 PM [Eastern Standard Time]

C20

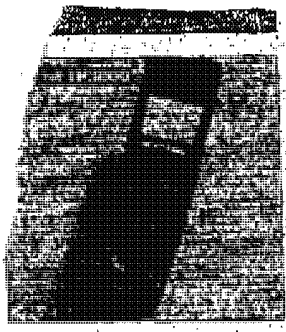

the original Blackberry, can send and receive e-mail with Web-browsing capabilities. Available only from GoAmerica, and next month from Motient.

Qualcomm pdQ
$300
A Palm organizer tapped inside the body of a clunky phone, a failure in the marketplace.

NeoPoint
$199
Cell phone with a large screen that shows 11 lines; the navigation is clumsy and the tedious Web browsing frustrating.

Sprint TP3000
$400
A cell phone with built-in PDA and Web browser. Slimmer than a Palm device, with a keypad that flips up to reveal a PDA.

Stinger
Still in development
A phone being developed by Microsoft that aims to combine e-mail, Web browsing and Microsoft's Pocket PC software.

Ricochet
Modem $300, plus the $70 monthly service fee
Faster than most other paging and mobile systems, this wireless network runs at 128 kbps. But it' [illegible], and is

Phones

Sprint TP3000: Though I haven't tested it thoroughly, this $400 phone, due out soon, promises to be the first decent combination of a PDA, a Wireless Web device and a phone in a single unit that is shaped like a normal-size cellular phone. At first glance, it seems like a typical phone, with a small window above a keypad. But the window and keypad flip up to reveal a long, narrow screen with crisp type that can comfortably display a menu, list or e-mail.

The phone has a calendar, address book, to-do list and other functions built in, and they are accessed via icons and a stylus, just as on a Palm. It can synchronize data with a PC, and receive content and e-mail from AOL and other providers, which the screen displays admirably. Other phones like this are coming, but this one will be available shortly.

Stinger: Microsoft is designing a phone, code-named Stinger, that promises to do far better than average phones at displaying e-mail and Web data. The company is drawing on its experience with PC and PocketPC software to produce a larger screen with much sharper text and clever navigation. At least one phone maker is working with Microsoft on the project.

New Technologies

Ricochet: This is an oddball, proprietary wireless system that is actually much faster than the existing pager and mobile-phone networks all other devices use. The original version of Ricochet, available for several years, could pull in your own e-mail and full-fledged Web pages at 28 kilobits a second, faster than any other wireless data solution. A new, upgraded version, introduced this summer, can surf the Web and e-mail at an incredible 128 kilobits a second, much faster than most PC modems.

So why isn't everybody using Ricochet? Well, the company that owns it, Metricom, has only been able to deploy its special network, which requires hanging equipment from thousands of light poles, in a few cities.

Received from < > at 2/12/03 6:30:05 PM [Eastern Standard Time]

C21

Sagem to Launch Hand-Held Computer That Doubles as Top-End Mobile Phone

By DAVID PAYNE
Staff Reporter of THE WALL STREET JOURNAL

Dark horse Sagem SA of France is aiming to win the race to turn the personal organizer into a purpose-built top-end mobile phone.

The French technology company plans to launch an all-in-one gizmo running Microsoft Corp.'s Pocket PC operating system in Europe in the first quarter of next year, in hope of edging out competitors in being first to the market. The company is one of Europe's top 10 suppliers of mobile phones, but the WA3050 will be its first hand-held computer.

Although a number of companies are preparing to launch clip-on modules that will allow existing personal organizers to work as phones during the next few months, Microsoft expects Sagem's WA3050 to be the first hand-held computer to work as a phone straight out of the box.

The Redmond, Wash., software company is hoping that Sagem's hybrid device, and others like it, will elevate the personal organizer into a mass-market device. Mobile phones currently outsell hand-held computers by about 40 to one. Adam Anger, business manager for Microsoft's European Mobility Group, said his company hopes the WA3050 will be sold through mobile-phone distribution channels rather than through computer outlets. "Sagem is used to working with mobile operators," he said.

Microsoft said the WA3050 is likely to cost about 1,000 euros at retail, but mobile-phone operators may sell it at a lower price as part of a wireless service package.

Sagem is just one of many mobile phone makers eyeing the personal-organizer market, which is currently dominated by Palm Inc. of Santa Clara, Calif. The leading phone makers, Nokia Corp. and Motorola Inc., plan to launch their own tablet-style devices running London-based Symbian Ltd.'s Quartz operating system in the second quarter of 2001.

But Palm's machines and other organizers running Palm's software also will be able to double as phones very soon. For example, Handspring Inc., of Mountain View, Calif., plans to launch its VisorPhone module in Europe early next year. Expected to retail at 350 euros, the VisorPhone can be attached on to the back of a Handspring personal organizer so that it can be used as a phone. The cheapest Handspring costs about 150 euros.

But at 188 grams, Sagem's WA3050 will be lighter than the Handspring package. It will also include a GPRS or general packet radio service-ak receiver, allowing it to maintain a permanent and relatively quick connection to the Internet.

Received from < > at 2/12/03 6:30:05 PM [Eastern Standard Time]

FAX RECEIVED
FEB 27 2003
GROUP 3700

#10

PATENT

IN THE UNITED STATES PATENT AND TRADEMARK OFFICE

Applicant:	**Title:**	**METHOD AND APPARATUS FOR HEALTH AND DISEASE MANAGEMENT COMBINING PATIENT MONITORING WITH WIRELESS INTERNET CONNECTIV..**
Roger J. Quy		
Serial No.: 09/738,270	**Examiner:**	**Wolfe, Jr., Willis Ray**
Filed: December 15, 2000	**Group Art Unit:**	**3747**

INFORMATION DISCLOSURE STATEMENT UNDER 37 CFR § 1.97 (e) (1)

Commissioner for Patents
Washington, D.C. 20231

The following items are being submitted for this Information Disclosure Statement:

1. X Preliminary Statements

2. X FORM PTO - 1449

I hereby certify that this correspondence is being deposited by facsimile addressed to the Commissioner for Patents to facsimile no. 703-872-9303 (cc: to Examiner Wolfe: 703-308-7766), on:

February 27, 2003
(Date of Deposit)

Mark D. Wieczorek
(Name of the Person Making the Deposit)

(Signature)

February 27, 2003
(Date of Signature)

Attorney Docket No. 00125/002001

Received from < > at 2/27/03 7:32:09 PM [Eastern Standard Time]

1. **Preliminary Statements**

Applicant cites herewith patents, publications or other information of which he is aware, which he believes may be material to the examination of this application and in respect of which there may be a duty to disclose in accordance with 37 CFR 1.56.

The filing of this information disclosure statement shall not be construed as a representation that a search has been made, an admission that the information cited is, or is considered to be, material to patentability or that no other material information exists. The filing of this information disclosure statement shall not be construed as an admission against interest in any manner.

Each item of information contained in this Information Disclosure Statement was cited in a communication or search report from a foreign patent office in a counterpart foreign application not more than three (3) months prior to the filing of this Information Disclosure Statement. Said foreign communication or search report is dated February 14, 2003 and a copy of same is provided herewith in addition to the references cited therein. No late filing fee is believed to be due in connection with this submission as this Information Disclosure Statement is being filed within three (3) months of the date of the foreign search report.

However, because this filing is after the issuance of the Notice of Allowance but before the payment of the issue fee, Applicant hereby petitions the Patent Office to accept this filing pursuant 37 CFR § 1.17(p). Therefore, authorization is hereby given to the Commissioner for Patents to charge the $130.00 Petition Fee to Deposit Account No. 50-1187.

Date: Feb. 27, 2003

Mark D. Wieczorek
Attorney for Applicant
Registration No. 37,966

P.O. Box 70072
San Diego, CA 92167
Phone: (562) 244-5671
Fax: (443) 238-2678

Received from < > at 2/27/03 7:32:09 PM [Eastern Standard Time]

Please type a plus sign (+) inside this box → [+]

PTO/SB/08B (10-98)
Approved for use through 10/31/99, OMB 0651-0031
Patent and Trademark Office: U.S./DEPARTMENT OF COMMERCE

Under the Paperwork Reduction Act of 1995, no persons are required to a collection of information unless it contains a valid OMB control number.

Substitute for form 1449B/PTO

INFORMATION DISCLOSURE STATEMENT BY APPLICANT

(use as many sheets as necessary)

Sheet 1 of 1

Complete if Known	
Application Number	09/738,270
Filing Date	December 15, 2000
First Named Inventor	Roger J. Quy
Group Art Unit	3747
Examiner Name	Wolfe, Jr., Willis Ray
Attorney Docket Number	00125/002001

U.S. PATENT DOCUMENTS

Examiner Initials*	Cite No.[1]	U.S. Patent Document: Number	Kind Code[2] (if known)	Name of Patentee or Applicant of Cited Document	Date of Publication of Cited document MM-DD-YYYY	Pages, Column, Lines, Where Relevant Passages or Relevant Figures Appear
	A1	5,772,586		Heinonen, et al.	06/30/98	

FOREIGN PATENT DOCUMENTS

Examiner Initials*	Cite No.[1]	Foreign Patent Document: Office[3]	Number[4]	Kind Code[2] (if known)	Name of Patentee or Applicant of Cited Document	Date of Publication of Cited document MM-DD-YYYY	Pages, Column, Lines, Where Relevant Passages or Relevant Figures Appear	T[5]
	B1	WO	WO 98/24358		Enact Health Management Systems	06/11/98		
	B2	WO	WO 99/41682		Southern Research Institute	08/19/99		

Examiner Signature		Date Considered	

*EXAMINER: Initial if reference considered, whether or not citation is in conformance with MPEP 609. Draw line through citation if not in conformance and not considered. Include copy of this form with next communication to applicant.
[1]Unique citation designation number. [2]Applicant is to place a check mark here if English language Translation is attached.
Burden Hour Statement: This form is estimated to take 2.0 hours to complete. Time will vary depending upon the needs of the individual case. Any comments on the amount of time you are required to complete this form should be sent to the Chief Information Officer, Patent and trademark Office, Washington, DC 20231. DO NOT SEND FEES OR COMPLETED FORMS TO THIS ADDRESS. SEND TO: Assistant Commissioner for Patents, Washington, DC 20231.

Received from < > at 2/27/03 7:32:09 PM [Eastern Standard Time]

P.B.5818 - Patentlaan 2
2280 HV Rijswijk (ZH)
TE +31 70 340 2040
TX 31651 epo nl
FAX +31 70 340 3016

Europäisches Patentamt
Zweigstelle in Den Haag Recherchenabteilung

European Patent Office
Branch at The Hague Search division

Office européen des brevets
Département à La Haye Division de la recherche

VOSSIUS & PARTNER
Siebertstrasse 4
81675 München
ALLEMAGNE

EINGEGANGEN
Vossius & Partner
17. Feb. 2003
Frist beach.

Datum/Date
14.02.03

Zeichen/Ref./Réf.	Anmeldung Nr./Application No./Demande n°./Patent Nr./Patent No./Brevet n°.
G2039 EP	00989280.3-2201-US0034159

Anmelder/Applicant/Demandeur/Patentinhaber/Proprietor/Titulaire
Quy, Roger J.

COMMUNICATION

The European Patent Office herewith transmits as an enclosure the European search report for the above-mentioned European patent application.

If applicable, copies of the documents cited in the European search report are attached.

☒ Additional set(s) of copies of the documents cited in the European search report is (are) enclosed as well.

REFUND OF THE SEARCH FEE

If applicable under Article 10 Rules relating to fees, a separate communication from the Receiving Section on the refund of the search fee will be sent later.

Received from < > at 2/27/03 7:32:09 PM [Eastern Standard Time]

European Patent Office

SUPPLEMENTARY EUROPEAN SEARCH REPORT

Application Number
EP 00 98 9280

DOCUMENTS CONSIDERED TO BE RELEVANT

Category	Citation of document with indication, where appropriate, of relevant passages	Relevant to claim	CLASSIFICATION OF THE APPLICATION (Int.Cl.7)
Y	WO 98 24358 A (SANDERS MATTHEW H ;FENSON EITAN (US); ENACT HEALTH MANAGEMENT SYST) 11 June 1998 (1998-06-11) * claim 14 * * page 2, line 26 - page 3, line 5 * * page 6, line 1 - line 8 * * page 7, line 12 - line 18 *	1-37	G06F19/00
Y,D	US 5 772 586 A (OKKONEN HARRI ET AL) 30 June 1998 (1998-06-30) * column 2, line 21 - line 31 * * column 2, line 41 - line 50 * * column 4, line 16 - line 27 * * column 4, line 58 - column 5, line 3 *	1-37	
Y	WO 99 41682 A (JOHNSON DAVID WAYNE ;SOUTHERN RES INST (US); DEAN ALAN HOYT (US);) 19 August 1999 (1999-08-19) * page 3, line 29 - page 4, line 9 * * page 4, line 30 - page 5, line 14 * * page 5, line 27 - line 31 *	1-37	
			TECHNICAL FIELDS SEARCHED (Int.Cl.7) G06F A61B

The supplementary search report has been based on the last set of claims valid and available at the start of the search.

Place of search	Date of completion of the search	Examiner
MUNICH	30 January 2003	Sisk, A

CATEGORY OF CITED DOCUMENTS

X : particularly relevant if taken alone
Y : particularly relevant if combined with another document of the same category
A : technological background
O : non-written disclosure
P : intermediate document

T : theory or principle underlying the invention
E : earlier patent document, but published on, or after the filing date
D : document cited in the application
L : document cited for other reasons

& : member of the same patent family, corresponding document

EPO FORM 1503 03.82 (P04C04)

Received from < > at 2/27/03 7:32:09 PM [Eastern Standard Time]

ANNEX TO THE EUROPEAN SEARCH REPORT ON EUROPEAN PATENT APPLICATION NO. EP 00 98 9280

This annex lists the patent family members relating to the patent documents cited in the above-mentioned European search report. The members are as contained in the European Patent Office EDP file on
The European Patent Office is in no way liable for these particulars which are merely given for the purpose of information.

30-01-2003

Patent document cited in search report	Publication date	Patent family member(s)	Publication date
WO 9824358 A	11-06-1998	AU 5461298 A	29-06-1998
		WO 9824358 A2	11-06-1998
		AU 8166498 A	04-01-1999
		WO 9859487 A1	30-12-1998
US 5772586 A	30-06-1998	FI 960636 A	13-08-1997
		AU 1726697 A	28-08-1997
		EP 0959755 A1	01-12-1999
		WO 9728736 A1	14-08-1997
		JP 2000504597 T	18-04-2000
WO 9941682 A	19-08-1999	AU 2762899 A	30-08-1999
		WO 9941682 A2	19-08-1999

EPO FORM P0459

For more details about this annex : see Official Journal of the European Patent Office, No. 12/82

Received from < > at 2/27/03 7:32:09 PM [Eastern Standard Time]

US005772586A

United States Patent [19]

Heinonen et al.

[11] Patent Number: 5,772,586

[45] Date of Patent: Jun. 30, 1998

[54] METHOD FOR MONITORING THE HEALTH OF A PATIENT

[75] Inventors: Pekka Heinonen; Harri Okkonen, both of Espoo, Finland

[73] Assignee: Nokia Mobile Phones, Ltd., Finland

[21] Appl. No.: 795,389

[22] Filed: Feb. 4, 1997

[30] Foreign Application Priority Data

Feb. 12, 1996 [FI] Finland 960636

[51] Int. Cl.[6] A61B 5/00

[52] U.S. Cl. 600/300; 128/904; 600/365

[58] Field of Search 128/903, 904; 600/309, 365, 301, 300

[56] References Cited

U.S. PATENT DOCUMENTS

5,415,167	5/1995	Wilk	128/653.1
5,462,051	10/1995	Oka et al.	
5,507,288	4/1996	Böcker et al.	128/633
5,544,661	8/1996	Davis et al.	128/904

FOREIGN PATENT DOCUMENTS

0 417 944 B1	3/1991	European Pat. Off. .	
0 680 727 A1	11/1995	European Pat. Off. .	
7-307803	11/1995	Japan .	
WO 90/08361	7/1990	WIPO .	

OTHER PUBLICATIONS

"A Telemedicine Distributed Decision-Support System for Diabetes Management", proceedings of the Annual International Conference of the IEEE Engineering in Medicine and Biology Society, vol. 14, Nov. 1992, (Paris, France), pp. 1238–1239, E.J. Gomiz et al.

Primary Examiner—Jennifer Bahr
Assistant Examiner—Eric F. Winaker
Attorney, Agent, or Firm—Finnegan, Henderson, Farabow, Garrett, & Dunner, L.L.P.

[57] ABSTRACT

The present invention relates to a method for monitoring the health of a patient by utilizing measurements. In order to improve the contact between the patient and the person treating him, the results of the measurements are supplied via a communications device (1) utilizing a wireless data transmission link to a data processing system (9) available to the person monitoring the patient's health, and the patient's health is monitored by means of the data stored in the data processing system (9).

7 Claims, 1 Drawing Sheet

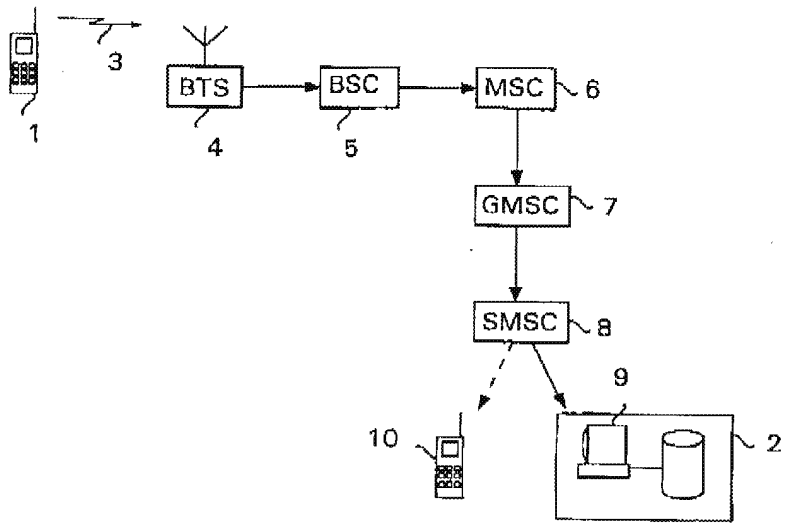

Received from < > at 2/27/03 7:32:09 PM [Eastern Standard Time]

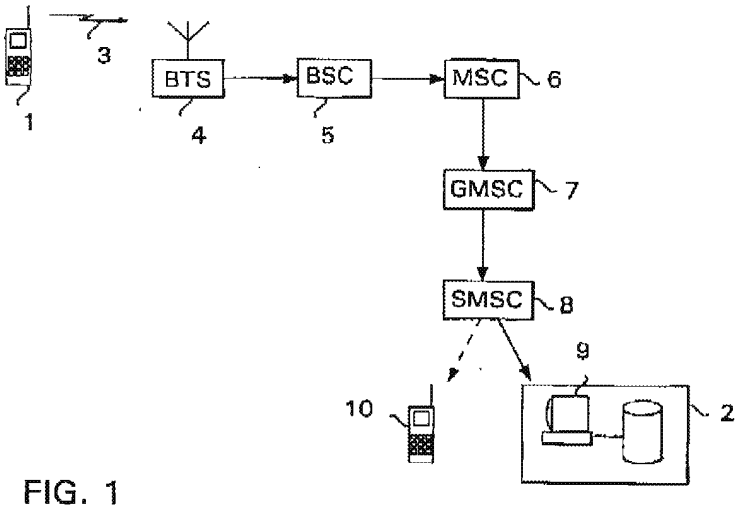

FIG. 1

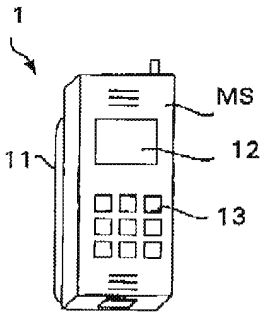

FIG. 2

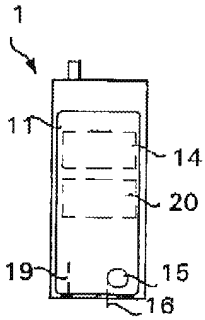

FIG. 3

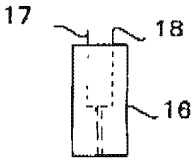

FIG. 4

Received from < > at 2/27/03 7:32:09 PM [Eastern Standard Time]

METHOD FOR MONITORING THE HEALTH OF A PATIENT

FIELD OF THE INVENTION

The present invention relates to a method for monitoring the health of a patient by utilizing measurements. The invention further relates to a system for monitoring the health of a patient, the system comprising a portable measuring device for carrying out a measurement in order to evaluate the patient's health, and a data processing system that is available to a person treating the patient and that maintains data about the results of the performed measurements. The invention also relates to a portable measuring device for carrying out a measurement in order to evaluate the health of a patient.

The invention relates specifically to the self-care and monitoring of the health of a patient with diabetes, but the method, system and measuring device according to the invention can also be utilized in other connections. However, in the following the invention will be described by way of an example specifically in connection with treating diabetes.

DESCRIPTION OF THE PRIOR ART

As is well known, monitoring the health of a patient with diabetes is primarily based on the measurement of the patient's blood glucose level at regular intervals. Treating diabetes requires regular measurements and regular monitoring of the measurement results in order to ensure that the patient's blood glucose level definitely remains within the allowable area and that the patient's medication is optimal.

However, in the present health care system it is not possible for financial and practical reasons for a person specialized in treating diabetes to personally monitor continuously the health of a patient, but the monitoring of the patient's health is largely dependent on the patient himself. Therefore the patient himself must perform measurements at regular intervals. In order to carry out measurements, the patient has to use several instruments which include at present for example a lancet for pricking the skin, a strip for taking a blood sample, and a measuring device to which the strip containing the blood sample is supplied in order to measure the blood glucose level. The prior measuring devices usually measure the blood glucose level either electrically or optically. For the purpose of obtaining data about the development of a patient's health, for example the blood glucose level, over a longer period, the patient must also keep a record of the results of blood samples, for instance.

The fact that a relatively large number of patients with diabetes also contract a secondary disease (e.g. cardiovascular diseases, neuropathy or blindness), which in turn causes considerable costs for the society, clearly indicates that at the moment doctors cannot treat patients with diabetes sufficiently effectively or cannot help the patient to care for himself. One reason for this is that each doctor often treats a high number of patients, whereupon the contact between each individual patient and the doctor is insufficient due to for example too few appointments and the doctor cannot therefore monitor the development of the health of individual patients sufficiently effectively. Also, the data submitted to the doctor is dependent on the patient's own recording, and there is always the possibility that a measurement result is erroneously recorded or it is not recorded at all.

SUMMARY OF THE INVENTION

The purpose of the present invention is to solve the above-described problem and to provide a method by means

of which a doctor treating a patient is able to monitor the health of the patient under his care more accurately and effectively than previously. This object is achieved with a method according to the invention in which a patient independently performs measurements and which is characterized by supplying the results of the measurements via a communications device utilizing a wireless data transmission link to a data processing system available to a person monitoring the patient's health, and monitoring the patient's health by means of the data stored in the data processing system.

The expression "a person monitoring the patient's health" refers in this connection to anyone who participates in the treatment of the patient and who needs to monitor the development of the patient's health. Therefore this person does not necessarily have to be a doctor, but for example in connection with treating a child the parents may monitor the patient's health.

The invention also relates to a system wherein the method according to the invention can be utilized. The system according to the invention is characterized in that the measuring device consists of a measuring unit and a communications device that utilizes a wireless data transmission link and that is connected to said unit, the measuring device comprising means for supplying the result of the measurement carried out by the measuring unit via said data transmission link to said data processing system. The aforementioned data processing system may be a data processing system of a hospital, for example, or some other corresponding support unit.

The invention further relates to a portable measuring device with which the method according to the invention can be applied. The measuring device according to the invention is characterized in that the measuring device consists of a measuring unit and a communications device that utilizes a wireless data transmission link and that is connected to said unit, the measuring unit comprising means for supplying the result of the measurement via the communications device to a data processing system available to a person treating the patient.

The term "communications device" refers in this connection to any device which is suitable for wireless communications and by means of which the patient can transmit his measurement results to the data processing system available to his doctor, regardless of where the patient is at the moment. Such a communications device may be for example any radio transmitter, such as a mobile phone operating via base stations or possibly via a satellite, or for example a two-way pager.

The invention is based on the idea that when the results of the measurements carried out by the patient himself are transmitted automatically via a wireless data transmission link directly to the person or persons treating him, the doctor is able to monitor the development of the patient's health better than before and to help the patient in his self-care, so that the treatment of the patient is considerably improved. Wireless data transmission enables the doctor to obtain the measurement results concerning the patient's health in real time, if required, regardless of the patient's current location. Therefore it is not necessary for the patient and the doctor to meet personally in order for the doctor to be informed about the latest developments in the patient's health, but the patient can transmit the latest measurement results to the doctor, for example from a summer cottage situated in a remote area, whereafter the patient and the doctor may discuss further treatment for example by phone, if necessary.

Received from < > at 2/27/03 7:32:09 PM [Eastern Standard Time]

Also, for example when examining the recent measurement results of the patient, the doctor may discover that the patient's medication should be changed and he can thus ask the patient to make an appointment for more detailed tests. The primary advantages of the arrangement according to the invention therefore include the accurate and rapid transmission of measurement results from the patient to the doctor, the gathering of measurement results in the patient's normal environment so that for example the patient's actual exercise level and/or diet are more apparent in the measurement results and hospital surroundings do not distort the results, and the possibility for the doctor to monitor the recent development of the patient's health without the patient having to make an appointment with the doctor, in which case the patient can visit the doctor/the hospital only when he really needs and not according to a predetermined schedule.

In a preferred embodiment of the measuring device according to the invention, the measuring device consists of a mobile phone and of a combination of a measuring unit and a battery placed in the battery space of the mobile phone. This embodiment of the invention is highly advantageous since it can be implemented utilizing prior components, i.e. for example a mobile phone of the GSM system and an existing mobile communication system, and therefore the application of the arrangement according to the invention is very economical. Also, when the measuring unit is designed in such a way that it can be placed in the battery space of the mobile phone, the number of the articles the patient has to carry with him is minimized. Therefore the patient can easily carry the measuring device with him without attracting the attention of other people in the same way as when carrying a separate measuring device. Another advantage of the mobile phone is that the doctor can contact the patient any time with the phone for example in a situation where the doctor has noticed a need for a personal contact on the basis of the patient's recent measurement results, for example when the risk of hypoglycaemia has increased.

The preferred embodiments of the method, system and measuring device according to the invention are disclosed in the appended dependent claims 2, 4 and 6 to 11.

BRIEF DESCRIPTION OF THE DRAWINGS

In the following, the invention will be described in greater detail by way of an example by means of a preferred embodiment illustrated in the accompanying figures, in which

FIG. 1 illustrates the first preferred embodiment of the system according to the invention,

FIGS. 2 and 3 illustrate the first preferred embodiment of the measuring device according to the invention, and

FIG. 4 illustrates the strip shown in FIG. 3.

DESCRIPTION OF THE PREFERRED EMBODIMENTS

FIG. 1 is a block diagram of the first preferred embodiment of the system according to the invention. The measuring device 1 shown in FIG. 1 consists of a mobile phone and a measuring unit. The invention will be described below by way of an example, assuming that the measuring unit comprises means for measuring the blood glucose level, even though the measuring unit may also comprise means for performing some other measurement, such as for measuring blood pressure, fever or pulse.

When a patient has carried out a measurement utilizing the measuring unit comprised by the measuring device 1, the measuring device 1 transmits the measurement result to the data processing system 9 of the hospital 2. This takes place in such a way that the mobile phone that forms a part of the measuring device 1 and that is assumed to be, by way of an example, a mobile phone of the GSM mobile communication system (Groupe Spécial Mobile) transmits the measurement result supplied by the measuring unit in the form of a short message 3 to a base station 4. The base station 4 forwards the message via a base station controller 5, a mobile services switching centre (MSC) 6 and a gateway centre 7 to a short message service centre (SMSC) 8 in the mobile system. The GSM system and the short message service thereof are described in greater detail for example in *The GSM System for Mobile Communications* by M. Mouly and M.-B. Pautet, Palaiseau, France, 1992, ISBN: 2-9507190-0-7, and therefore they will not be described in greater detail in this connection.

The short message service centre 8 may be programmed specifically in each case to transmit the short message received from the patient's measuring device 1 directly to the data processing system 9 of the hospital 2, where it is stored in the patient database of the hospital, or alternatively the message can be temporarily buffered in the short message service centre 8, until the doctor treating the patient reads it via the data processing system 9 of the hospital 2 or alternatively for example via his mobile phone 10. Therefore the doctor treating the patient has at all times access to the patient's measurement results regardless of the current location of the doctor and/or the patient.

The hospital data processing system 9 preferably contains for each patient the results of the measurements, carried out with the patient's own measuring device 1 or alternatively performed at the hospital, for a period of several years. Therefore the doctor treating the patient can monitor the development of the patient's health via the data processing system 9 for example by utilizing a trend analysis also when the doctor and the patient have not been in direct communication with each other.

If required, the patient may also transmit information other than the measurement result and the time of measurement from his measuring device 1. Thus, for example a patient with diabetes can supply data concerning for example his diet, dosage of insulin, exercise or the like via the keyboard of the measuring device, and also this information will be forwarded by means of a short message to the data processing system 9 used by the doctor treating the patient.

The hospital data processing system 9 preferably also provides other reports concerning individual patients and/or for example all patients with a certain disease. Therefore, also users other than the patient's own doctor can utilize the data gathered in the data processing system for example for the purpose of drafting different types of statistics or instructions for treatment. Possible other users include for example authorities, insurance companies, research centres and the like.

FIGS. 2 and 3 illustrate the first preferred embodiment of the measuring device according to the invention. In FIG. 2, the measuring device is shown in a diagonal front view and in FIG. 3 in a rear view. The measuring device 1 consists of a mobile phone MS and a measuring unit 11 placed in the battery space of the mobile phone. The measuring unit and the mobile phone may naturally also be entirely separate components that are connected for example by means of a cable, in which case the patient must carry with him two separate parts instead of one, however.

The mobile phone MS shown in FIGS. 2 and 3 may be for example a phone of the GSM system known per se, provided with connectors by means of which the measuring unit 11 placed in the battery space can be connected to a communication bus of the phone. The phone may also have been

Received from < > at 2/27/03 7:32:09 PM [Eastern Standard Time]

subjected to changes concerning its software, so that the measuring unit 11 is able to utilize the display 12 and the keyboard 13 of the phone.

The measuring unit 11 is designed in such a way that it fits in the battery space of the mobile phone MS when the normal battery of the phone has been removed therefrom. In addition to the measuring means, the measuring unit therefore also comprises a battery 14 that supplies an operating voltage to the mobile phone MS and to the measuring unit 11 itself. The measuring unit preferably further comprises a back-up battery that makes it possible to also perform measurements with the measuring unit when the battery 14 has run down and no calls can be made from the mobile phone.

FIG. 3 illustrates the measuring means provided in the measuring unit of the measuring device 1. The measuring device shown in FIG. 3 comprises means for measuring the blood glucose level in an electric manner known per se, even though the measuring device could also be provided with means for carrying out the measurement optically or even without a need to penetrate the skin.

The measuring unit 11 comprises an integrated lancet 19 that may be operated for example with a spring so that the patient can easily prick the skin with it. The patient thereafter pulls out a strip 16 that is known per se and that is placed for example on a reel 15 in the measuring unit 11, the strip being impregnated with the drop of blood (the structure of the strip is illustrated in greater detail in FIG. 4). One reel provided in the measuring unit 11 may comprise for example strips needed for one week. Electrodes which are provided in the strip and between which the drop of blood is absorbed are connected to an electronic section provided in the measuring unit 11, the section comprising means for measuring the blood glucose level. For this purpose, the electronic section 20 comprises for example an A/D converter and a memory, for example a ROM table, where the glucose levels corresponding to different electric measurement values are stored. If the measuring unit employs optical measurement instead of resistance measurement, the ROM table correspondingly stores glucose levels corresponding to different optical measurement values.

The electronic section 20 also preferably comprises a memory where the measurement result can be stored. Therefore, carrying out a measurement does not require the mobile phone MS to be connected to the measuring unit 11 at the moment of measurement, but the measuring unit can operate independently so that the measurement result is stored in the memory provided therein. Next time when the measuring unit 11 is connected to the mobile phone MS (or when the measurement is complete, if the measuring unit has been continuously connected to the mobile phone), the electronic section of the measuring unit 11 activates the short message transmission described in connection with FIG. 1 in order to forward the measurement result to the data processing system of the doctor treating the patient.

The electronic section 20 preferably comprises means for storing in memory several earlier measurement results and for compiling statistics on them, so that the patient can browse through previous measurement results and monitor their development by means of the keyboard 13 and the display 12 of the mobile phone MS. The electronic section may also store a special program related to the act of measurement, the program guiding the patient in carrying out the measurement for example by providing advice via the display 12. The program may for example provide the patient with a prompt urging him to immediately contact the doctor if the measurement results exceed or fall below a predetermined threshold value.

FIG. 4 illustrates the strip 16 shown in FIG. 3. The strip 16 known per se, having for example the outer dimensions

of 2 mm×7 mm, comprises two integrated electrodes 17 and 18. Between the electrodes there is a capillary which is impregnated with a blood sample. The blood sample can thereafter be subjected to electrical measurement by connecting the ends of the electrodes 17 and 18 projecting from the strip to the measuring unit.

It should be understood that the above description and the related figures are only intended to illustrate the present invention. Different variations and modifications of the invention will be evident for those skilled in the art without departing from the scope and spirit of the invention disclosed in the appended claims.

We claim:

1. A system for use in monitoring the health of a patient, the system comprising:

a portable measuring device for carrying out a measurement to provide measurement results suitable for evaluating the patient's health;

data processing system that maintains data corresponding to the measurement results;

said measuring device comprising a measuring unit and a mobile phone having a battery space and using a wireless data transmission link, the mobile phone being connected to said measuring unit, wherein the measuring unit is located in the battery space of the mobile phone and is connected to a communication bus of the mobile phone, the measuring unit comprising means for supplying the measurement results to the mobile phone via the communication bus and further via a mobile communication network to the data processing system.

2. A system according to claim 1, wherein the measuring unit comprises means for measuring the patient's blood glucose level to provide the measurement results.

3. A portable measuring device comprising:

a measuring unit for carrying out a measurement to provide measurement results suitable for evaluating a patient's health, and

a mobile phone having a battery space and using a wireless data transmission links, the mobile phone being connected to said measuring unit,

wherein the measuring unit is located in the battery space of the mobile phone and is connected to a communication bus of the mobile phone, the measuring unit comprising means for supplying the measurement results to the mobile phone via the communication bus and further via a mobile communication network to a data processing system.

4. A portable measuring device according to claim 3, wherein the measuring unit comprises means for measuring the patient's blood glucose level to provide the measurement results.

5. A portable measuring device according to claim 3, wherein the measuring device comprises means for measuring the patient's blood glucose level including measuring strips maintained on a reel inside the measuring device.

6. A portable measuring device according to claim 3, wherein the measuring unit comprises memory means for storing the measurement results when the measuring unit is separate from the mobile phone and means for supplying the stored measurement results via the mobile phone to the data processing system when the measuring unit is connected to the mobile phone.

7. A portable measuring device according to claim 3, wherein the mobile phone utilizes a GSM mobile system and comprises means for transmitting the measurement results in the form of a short message of the GSM system.

* * * * *

Received from < > at 2/27/03 7:32:09 PM [Eastern Standard Time]

PCT WORLD INTELLECTUAL PROPERTY ORGANIZATION International Bureau

INTERNATIONAL APPLICATION PUBLISHED UNDER THE PATENT COOPERATION TREATY (PCT)

(51) International Patent Classification 6: A61B — A2

(11) International Publication Number: WO 98/24358

(43) International Publication Date: 11 June 1998 (11.06.98)

(21) International Application Number: PCT/US97/21747

(22) International Filing Date: 2 December 1997 (02.12.97)

(30) Priority Data:
08/753,966 4 December 1996 (04.12.96) US
60/050,528 23 June 1997 (23.06.97) US

(71) Applicant (*for all designated States except US*): ENACT HEALTH MANAGEMENT SYSTEMS [US/US]; Suite 306, 1975 El Camino Real West, Mountain View, CA 94040-2218 (US).

(72) Inventors; and

(75) Inventors/Applicants (*for US only*): FENSON, Eitan [US/US]; 1525 Siesta Drive, Los Altos, CA 94024 (US). TACKLIND, Christopher, A. [US/US]; 250 Cowper Street, Palo Alto, CA 94301 (US). SANDERS, Matthew, H. [US/US]; 23442 Toyonita Road, Los Altos Hills, CA 94024 (US).

(74) Agents: KRUEGER, Charles, E. et al.; Townsend and Townsend and Crew LLP, 8th floor, Two Embarcadero Center, San Francisco, CA 94111 (US).

(81) Designated States: AL, AM, AT, AU, AZ, BA, BB, BG, BR, BY, CA, CH, CN, CU, CZ, DE, DK, EE, ES, FI, GB, GE, GH, HU, ID, IL, IS, JP, KE, KG, KP, KR, KZ, LC, LK, LR, LS, LT, LU, LV, MD, MG, MK, MN, MW, MX, NO, NZ, PL, PT, RO, RU, SD, SE, SG, SI, SK, SL, TJ, TM, TR, TT, UA, UG, US, UZ, VN, YU, ZW, ARIPO patent (GH, KE, LS, MW, SD, SZ, UG, ZW), Eurasian patent (AM, AZ, BY, KG, KZ, MD, RU, TJ, TM), European patent (AT, BE, CH, DE, DK, ES, FI, FR, GB, GR, IE, IT, LU, MC, NL, PT, SE), OAPI patent (BF, BJ, CF, CG, CI, CM, GA, GN, ML, MR, NE, SN, TD, TG).

Published
Without international search report and to be republished upon receipt of that report.

(54) Title: SYSTEM FOR DOWNLOADING AND REPORTING MEDICAL INFORMATION

(57) Abstract

A system for transferring binary medical files from remote devices to a central database over the Internet includes an adapter for converting the binary medical information file to a compatible file of keystroke codes. The keystroke codes are transferred to a computer which converts the codes to ASCII characters which are input by an applet and transferred to the central database. Software at the central database recovers the original binary medical information file. Additionally, a system for accessing medical reports in real-time utilizes a report requesting page having a form for entering ID codes and report requesting data. The codes and data are transferred over the Internet to a host computer which generates a report file and transfers the file via the Internet to the requestor to be displayed on a computer.

Received from < > at 2/27/03 7:32:09 PM [Eastern Standard Time]

FOR THE PURPOSES OF INFORMATION ONLY

Codes used to identify States party to the PCT on the front pages of pamphlets publishing international applications under the PCT.

AL	Albania	ES	Spain	LS	Lesotho	SI	Slovenia
AM	Armenia	FI	Finland	LT	Lithuania	SK	Slovakia
AT	Austria	FR	France	LU	Luxembourg	SN	Senegal
AU	Australia	GA	Gabon	LV	Latvia	SZ	Swaziland
AZ	Azerbaijan	GB	United Kingdom	MC	Monaco	TD	Chad
BA	Bosnia and Herzegovina	GE	Georgia	MD	Republic of Moldova	TG	Togo
BB	Barbados	GH	Ghana	MG	Madagascar	TJ	Tajikistan
BE	Belgium	GN	Guinea	MK	The former Yugoslav Republic of Macedonia	TM	Turkmenistan
BF	Burkina Faso	GR	Greece			TR	Turkey
BG	Bulgaria	HU	Hungary	ML	Mali	TT	Trinidad and Tobago
BJ	Benin	IE	Ireland	MN	Mongolia	UA	Ukraine
BR	Brazil	IL	Israel	MR	Mauritania	UG	Uganda
BY	Belarus	IS	Iceland	MW	Malawi	US	United States of America
CA	Canada	IT	Italy	MX	Mexico	UZ	Uzbekistan
CF	Central African Republic	JP	Japan	NE	Niger	VN	Viet Nam
CG	Congo	KE	Kenya	NL	Netherlands	YU	Yugoslavia
CH	Switzerland	KG	Kyrgyzstan	NO	Norway	ZW	Zimbabwe
CI	Côte d'Ivoire	KP	Democratic People's Republic of Korea	NZ	New Zealand		
CM	Cameroon			PL	Poland		
CN	China	KR	Republic of Korea	PT	Portugal		
CU	Cuba	KZ	Kazakstan	RO	Romania		
CZ	Czech Republic	LC	Saint Lucia	RU	Russian Federation		
DE	Germany	LI	Liechtenstein	SD	Sudan		
DK	Denmark	LK	Sri Lanka	SE	Sweden		
EE	Estonia	LR	Liberia	SG	Singapore		

Received from < > at 2/27/03 7:32:09 PM [Eastern Standard Time]

SYSTEM FOR DOWNLOADING AND REPORTING MEDICAL INFORMATION

BACKGROUND OF THE INVENTION

Medical Monitoring Devices

Various medical monitoring devices exist that download medical measurement data from a remote location to a central location. Such systems require a specialized interface to connect the device to a communication system such as the public telephone system or a pager information system.

For example, the AIRWATCH respiratory function monitor, described in U.S. Patent Application No. 5,549,117 ("the '117 patent") filed May 23, 1994 and assigned to the assignee of the present application, is a hand-held respiratory monitor that stores a binary file including information relating to respiratory parameters. When the AIRWATCH is connected to a telephone line a connection is automatically established to a central database and the encoded file is modulated by a software modem into analog signals which are transferred to a modem at the central site. The central modem demodulates the signals and generates a file which is processed at the central location and used to update a data base.

Other medical devices include interface software and hardware connections to a personal computer. The computer can then be used to communicate with the central data base utilizing a modem.

Additionally, as more monitoring devices are utilized in a patient's home various devices could be located in rooms or locations. Accordingly, the problems of interfacing to the central database are compounded.

The remote connection of medical devices, such as the AIRWATCH, via the public telephone lines presents problems when such devices are to be used worldwide. The binary

Received from < > at 2/27/03 7:32:09 PM [Eastern Standard Time]

medical information file may include information related to glucose levels, blood pressure, etc. The public telephone systems of various countries are not standardized so different models would have to be built for different countries thereby increasing the overall cost of manufacturing the devices. Since low cost is critical to encourage widespread use of such devices the lack of telephone system compatibility is a serious problem to the internationalization of the technology.

Additionally, each device generally includes a front end to communicate results of a measurement to the user of the device, e.g., a patient or health care provider. Typically, a front end includes LEDs, a alpha-numeric display, synthetic voice output etc. The device may be coupled to a personal computer which would execute special software to operate as a front end.

Report Distribution System

A system for generating and distributing medical reports from a central database is described in the above-referenced patent application. Various formats including graphs and tables are described. Typically, these reports are delivered by fax, mail, or e-mail. However, none of these delivery systems facilitate real-time access of medical records by a requestor.

SUMMARY OF THE INVENTION

In one aspect of the present invention, the world-wide-web (WWW) is utilized as a universal front end for a medical monitoring device. Information from the device is communicated to a personal computer executing standard web browser software. A CGI form or applet, executed by the web browser software, receives the communicated information and functions as the front end of the device. Thus, a high-resolution personal computer display can be utilized as the front end of an inexpensive medical device.

According to another aspect of the invention, the WWW front-end includes a hot link to a personal physician or other health-care provider. The link includes a URL to a web

Received from < > at 2/27/03 7:32:09 PM [Eastern Standard Time]

page of the doctor and transmits the medical information downloaded from a medical device.

According to another aspect of the invention, medical information received by the personal computer is communicated to the central database over the internet.

According to another aspect of the invention, an adapter formats the output of a medical device into an input format the can be processed by a page displayed by a web browser or by an applet executed by the web browser.

According to another aspect of the invention, medical reporting devices in different locations can be connected utilizing a home health-care bus. The devices can be coupled to the electrical wiring which is used to communicate information downloaded by the various devices to a central data handler.

According to one aspect of the present invention, a system is provided for utilizing the internet to transfer binary medical files between a remote health parameter monitoring device and a central database. Since the internet is platform independent it facilitates the standardization and internationalization of health monitoring systems.

According to a further aspect, a convertor is connectable to the device to receive a binary medical information file and convert the file to key codes to form a compatible medical information file. The key codes are transferred to a computer to be processed as keystroke data.

According to a still further aspect, a client workstation attached to the internet utilizes a browser to display a data transfer page embedding a data transfer applet. The data transfer applet accesses a keyboard buffer to input the encoded compatible file and transfer the encoded compatible file over the internet to the central database.

According to a still further aspect of the invention, the received encoded compatible file is decoded and decompatible at the central data base to recover the original binary medical information file.

Received from < > at 2/27/03 7:32:09 PM [Eastern Standard Time]

According to another aspect of the invention, real-time access to medical reports is provided over the internet.

According to a further aspect, a report home page includes a form for accepting ID codes and report format information. The request information entered into the form is transferred over the internet to a request delivery server application operating on a host computer utilizing the common gateway interface (CGI) or an applet.

According to a further aspect of the invention, the report delivery software invokes report generating software at the central data base to generate the requested report in the form of either a text or graphics report file. The request delivery software formats the report file and transfers the formatted report file via the internet to the requestor to be displayed at the requestor's computer.

In one aspect of the present invention, the world-wide-web (WWW) is utilized to provide an enhanced interface to a medical monitoring device. Information from the device is communicated to a personal computer executing standard web browser software. A CGI form or applet, executed by the web browser software, receives the communicated information and functions as the front end of the device. Thus, a high-resolution personal computer display can be utilized as the front end of an inexpensive medical device. A result page generated by web server functions as the display of the medical measurement device. Additionally, the web page includes applets for controlling the device according to standard input, e.g. via mouse or keyboard, which is processed by the result page.

According to another aspect of the invention, medical reporting devices in different locations can be connected utilizing a home health-care bus in the form of the "Universal Serial Bus" (USB).

According to another aspect of the invention, a serial ID code is transferred to a remote data base server. The data base server responds to the code by providing data associated with the code. User specific data accessed by the

Received from < > at 2/27/03 7:32:09 PM [Eastern Standard Time]

ID code is utilized to format the response for the particular user.

Other features and advantages of the invention will be apparent from the following detailed description and appended drawings.

BRIEF DESCRIPTION OF THE DRAWINGS

Fig. 1A is a schematic diagram of first preferred embodiment of the invention;

Fig. 1B is a block diagram of a personal computer;

Fig. 2 is a flow-chart depicting the steps for using a web browser as a front end of a medical measurement device;

Fig. 3 is a schematic diagram depicting a home health-care bus;

Fig. 4A is a schematic diagram of a medical measurement device that downloads data to computer through an adapter;

Fig. 4B is a flow-chart depicting the steps of converting a medical information file into a format compatible with a standard input to a personal computer;

Fig. 5 is a diagram depicting a standard keyboard interface;

Fig. 6A is a schematic diagram of an adapter;

Figs. 6B and 6C are diagrams depicting a specific embodiment of an adapter;

Fig. 7 is a flow-chart depicting the steps of transferring a compatible medical information file over the internet;

Fig. 8 is a schematic diagram of a system for transferring medical reports over the internet; and

Fig. 9 is a flow-chart depicting the steps of transferring medical reports over the internet.

DETAILED DESCRIPTION OF THE PREFERRED EMBODIMENTS

Received from < > at 2/27/03 7:32:09 PM [Eastern Standard Time]

Fig. 1A is a block diagram of a preferred embodiment of virtual front end utilizing standard web-browser software. In Fig. 1A, a medical device 10 includes an infrared (IR) transmitter for transmitting medical measurement data, modulated onto an IR carrier, to the IR input of a personal computer 30. In the following the term personal computer will be utilized to refer to any device, such as WebTV or other web appliances, that can be used to access the internet. The transmitted medical measurement data is transmitted in the form of keyboard data (as described more fully below) before being modulated onto the IR carrier. The IR transmitter and IR keyboard interface are standard, well-known parts and are not part of the present invention. The IR keyboard interface directly serves a variety of input devices such as, for example, a keyboard, mouse, AIRWATCH, thermometer, range of motion sensors, barcode reader, scale, height measurement, blood pressure cuff, tympanic compliance, mag stripe writer, tag writer, printer, and printer for wrist band.

Fig. 1B is a block diagram of a typical personal computer and connected peripheral device. The CPU executes programs which may be provided from the hard-disk drive (HDD), floppy-disk drive (FDD), from the serial port, or from other sources. Typically, a computer is connected to the internet via a modem connected to the serial port.

The personal computer executes standard web-browser software, e.g., Netscape Navigator, America On Line, or MicroSoft Internet Explorer. The World Wide Web (WWW) is a network for connecting computers via the internet. Typically, a client computer executes a browser application that allows a user to access documents from any site on the WWW. Documents in hypertext mark-up language (HTML) include links to other HTML documents, graphics and sound files, executable applications, etc. In some cases an HTML document includes executable code, scripts, embedded within the document. In other situations an applet, for example a Java applet, is referenced within an HTML document and downloaded from a server to execute on the client computer displaying the HTML document with the browser application.

Received from < > at 2/27/03 7:32:09 PM [Eastern Standard Time]

Forms may be included in HTML pages. Data is entered into a form through the keyboard and transmitted to a server application utilizing the common gateway interface (CGI). A program resides on the server that receives the information from the form and returns appropriate data. The types of information that can be exchanged includes text data and binary files such as GIF images.

In one embodiment, depicted in the flow-chart of Fig. 2, a front-end home page is displayed by the web-browser. The URL of the front-end home page can be stored as a bookmark or favorite place.

The compatible medical data is accepted by a form included in the front-end home page and transmitted to a server application executing on a host computer 32 (Fig. 1A) using the common gateway interface (CGI). The server application generates a page displaying the test results and transmits the test results page to the web-browser. The web-browser then displays the results to the user.

Alternatively, the compatible medical data can be input to a Java applet executed by the browser software. The Java applet formats a results image which is displayed by the web-browser. In the interest of security, the I/O of a Java applet is restricted. For example, Java applets cannot read or write files on the client computer executing the applet. Additionally, the browser application limits an applet's network connectivity. An applet's network connectivity is currently limited to its host machine. However, a Java applet can input keyboard data entered through the keyboard of the client machine.

Regardless of whether the results page is generated by the server or a Java applet, the results page can include a hot link to the web page of a personal physician or other health-care provider. By clicking on the link the results of a medical measurement is transmitted over the internet to the physician's computer 34 (Fig. 1A). A internet link between the computers 30 and 34 of the patient and physician facilitates real time-health care monitoring. For example, after reviewing the results of a measurement the physician

Received from < > at 2/27/03 7:32:09 PM [Eastern Standard Time]

might suggest retrying measurement under the same or different conditions.

Additionally, as depicted in Fig. 1A and described more fully below, the compatible medical data can be transmitted to the central database 36 (Fig. 1A) utilizing the CGI or a Java applet. The compatible medical data is received at the server which decodes the compatible medical data and transfers the decoded data to a central database 36 which integrates the decoded data into the database 36.

In Fig. 1A, a device utilizing an IR transmitter is depicted. If the device were in a different room than the user's computer then the device could not transmit data because IR transmission is limited to line-of-sight. Accordingly, if the device were heavy or immobile, such as a scale, or if multiple devices were located throughout the home an IR interface to the computer would not be practical.

However, as depicted in Fig. 3, various medical measurement devices throughout the home can be connected to a home healthcare bus. In a preferred embodiment, information from each device 10A and 10B is coupled to the home wiring system 300 and is transmitted to a data center 302 via the wiring system. The data is transmitted over the home wiring system utilizing interfaces well-known in the art. Alternatively, special wires, cable, IR repeaters, radio-frequency, or fiber could be utilized to form the bus. The data center 302 includes an interface, for example an IR transmitter, for providing encoded keyboard data to the personal computer.

Alternatively, the medical devices, web appliance, telephone, and other peripheral are connected to the "Universal Serial Bus" (USB). The USB provides a standard to merge desktop connections. USB compliant medical monitors 10A and 10B have USB interface connectors, e.g., the type B connector is identical in size to an RJ-11 socket. The monitors is connected directly to any USB computer or web appliance through a generic cord.

As described in the above-referenced '117 patent, the medical measurement device may be interface to the

Received from < > at 2/27/03 7:32:09 PM [Eastern Standard Time]

telephone line via a reported device which formats measured data and interfaces with the central data base. In the USB embodiment, the reporter may function in two modes.

In a first mode, the monitor downloads measurement data and the reporter interfaces with the central database through the USB bus. In the second interactive mode, the reporter establishes a live connection between the monitor and central server. This allows the reporter to be generic and the server interrogates the monitor directory. The reporter does not need to know anything specific about the particular connected monitor and the server can then be continuously extended to talk to new devices without changing the reporter.

The device of Fig. 1A outputs medical information data encoded as keyboard data which can be received by the keyboard interface of the personal computer. Thus, the medical device could generated medical measurement files in format compatible with a keyboard or other PC input port. Alternatively, medical information data in binary or any other incompatible format could be output by the device to an adapter. The adapter is designed to convert the data output by the device to encoded keyboard data which can be received by the keyboard interface of the computer. A system utilizing an adapter will now be described. In the following the adapter is a stand-alone device which is connected to the output of the medical measurement device. Alternatively, the adaptor could be integrated into the device.

Fig. 4A is a system level diagram of another preferred embodiment of the invention. In Fig. 4A, a medical monitoring device 10 outputs a binary medical information file. As described below, this file may be in the form of analog signals modulated on a carrier frequency or as a digital signal output by a digital interface.

The operation of the system will now be described with reference to Fig. 4A and flow chart of Fig. 4B. The binary file is transferred to an adapter 400 which receives the binary file and converts the file into a compatible medical file in a format that may be processed and decoded by the standard keyboard interface of a personal computer 30. In

Received from < > at 2/27/03 7:32:09 PM [Eastern Standard Time]

the compatible medical file each byte of the medical file is replaced by a scan code comprising ASCII characters which are written to a keyboard buffer as an compatible medical information file. Thus, there is a correspondence between words in the binary medical file and ASCII characters which are stored in the keyboard buffer.

The patient's personal computer 30 is connected to the World Wide Web on the Internet and executes a browser application. An applet on CGI form, invoked by the browser application, reads keystroke ASCII codes from the keyboard buffer and transfers the ASCII codes to a server application. The server application processes the received ASCII codes to reconstruct the original binary medical file which is then processed by software at the server to generate a result page to be displayed by the PC 30 or to store the received medical information in a database 36.

The result web page generated by the server can be formatted to function as an enhanced user interface. For example, the AIRWATCH (described above) includes an LED interface for displaying time, date, personal best data,etc., and includes buttons for controlling monitor functions. As monitors get smaller and more complicated the process of controlling each function of the device with small buttons and a small display gets difficult.

However, if the monitor is connected to web, via the OSD for example, then the web server can generate a result page for display on web appliance monitor that includes formatted display of the monitor output parameters and software buttons for controlling the monitor function.

As an example, for the AIRWATCH, the personal best and other data are displayed one at a time. The right and left buttons move to the next digit to the right or left. In an enhanced interface the entire line of parameters would be displayed stretching across the result page. With the standard mouse and keyboard interface any digit could be selected directly and a pop out list used to select the desired value.

Received from < > at 2/27/03 7:32:09 PM [Eastern Standard Time]

Once a monitor is connected to the web, the ID code is provided to the server and functions as a hardware key allowing access to the data on the server associated with that device.

The server responds to the ID by checking user-specific data which describes attributes of the user such as age and native language. The server formats a response page in a manner appropriate to the particular user. Viewing preferences can be saved and recalled during a next session.

Hardware key recognition can be utilized in connection with conventional typed in data such as passwords. If a logging monitor is used by more than one family member a "user selector" indicates to the web application which family member's data is to be displayed.

Similarly, when a connection is established from a doctor's office, the database server recognizes the device and the doctor (by his web login). The connection to the database is authorized and information is displayed appropriately.

PC Keyboard Controller and ISR

The structure of the keyboard 500 and keyboard interface 510 for a PC is depicted in Fig. 5. This configuration is well-know and will be only briefly described. When a key is pressed a scan code, in the form of ASCII codes, unique to the key is generated by the keyboard chip 502 and is serially transferred to the keyboard interface 510 by the keyboard cable 520. The serial data is converted to a parallel byte so that the scan code can be processed by the MPU.

The scan codes are received by the PC and translated to ASCII codes utilizing a Keyboard Interrupt Service Routine (ISR) included in the Basic I/O System (BIOS). The ISR is invoked by INT 09 each time a key is pressed and converts keyboard data into information that is useful to the system. This conversion results in the Keyboard ISR placing a two-byte character code into a keystroke buffer in the PC's memory.

Typically, the keyboard ISR in a PC/AT system converts the codes received into System Scan Codes. These System Scan Codes are then compatible into the two-byte

Received from < > at 2/27/03 7:32:09 PM [Eastern Standard Time]

character codes having a low-order byte, called the main byte, and a high-order byte, called the auxiliary byte. The ASCII value of a key-stroke (if any) is always contained in the main byte and the scan code as the auxiliary byte. When a key, such as a function key, edit key, or function key combination, does not have an ASCII value, then the Keyboard ISR sets the main byte to 00h and the auxiliary byte to a special key value.

A BIOS Keyboard Device Service routines provides an interface through which the operating system or application software can interface with the keyboard buffer.

The Adapter

Fig. 6A is a block diagram of the adaptor 400 which includes a device interface 402, processor 410, and serial interface 420. If the medical device 10m utilizes a modem to output a modulated carrier signal encoding the binary medical file then the device is connected to a modem interface in the device interface 402. If the medical device 10s has a serial output then it is connected to a serial interface in the device interface 402. A specific device interface 402 may have either a modem, serial interface, or combination of the two.

A processing unit 410 converts the words of the binary medical information file to scan codes and transfers the scan codes to the keyboard serial interface 420. The conversion of the words in the binary medical information to scan codes is accomplished utilizing standard techniques, e.g., a look-up-table.

The keyboard serial interface 420 transfers the scan code serially to the keyboard controller on the PC as described above. The keyboard serial interface 420 is a pass-through connection that passes the output from the connected keyboard to the PC when a medical device 10 is not connected to the adapter.

A specific embodiment of a prototype adapter 500 is depicted in Figs. 6B and 6C. In Fig. 6B a device having an output modulated by a modem is coupled to the adapter 500

Received from < > at 2/27/03 7:32:09 PM [Eastern Standard Time]

through a standard RJ-11 jack. A telephone simulator couples the binary medical file to an HP Palmtop computer through a PCM-CIA modem 620. A wedge circuit controllably couples either the keyboard or Palmtop output to the PC.

The operation of the adaptor 500 will now be described for the case where an AIRWATCH respiratory function monitor is coupled to the adaptor. The data interface to the AIRWATCH specifies a 5 byte serial number, a packet list including a header, 128 bytes of packet data, and 2 bytes of CRC (cyclic redundancy checking).

The adapter 500 auto-answers AIRWATCH initiated downloads and send the AIRWATCH data over the IBM PC keyboard prot as if typed on a "virtual" keyboard. Each byte of the AIRWATCH data is converted to 2 ASCII hex nibbles. Thus, for example a byte having hex value 0x1A is represented as if the two-character ASCII string "1A" was typed on the keyboard. In this embodiment the adapter 500 does not perform any CRC or error checking, it simply converts and passes along data that it receives.

As described above, the I/O options of Java applets are limited by security considerations. One such limitation is that the Java output cannot output data through the keyboard interface. For medical devices requiring an acknowledge signal or other handshaking, the adapter is not able to provide the required information. Accordingly, the server application can display an acknowledge which must be provided to the device by the user.

Internet Transfer of Medical Records

Referring to Figs. 1 and 7, a process for transferring medical information from a medical measuring device to a central database 36 will now be described. Referring to the flow-chart of Fig. 7, a browser application, running on the user's computer, utilizes a designated URL to access data transfer page over the internet. As described above, the designated URL may be automatically provided when a medical device 10 is coupled to the adapter 20.

Received from < > at 2/27/03 7:32:09 PM [Eastern Standard Time]

The data transfer page includes an embedded data transfer applet, which in a preferred embodiment is a Java applet. The applet is executed on the user's computer and inputs the converted medical file from the keyboard buffer and transmits the file to the host computer 32.

Alternatively, as described above, the data transfer page can include a form that transmits converted medical data to the host 32 utilizing the CGI.

The host computer host decodes the converted medical file to change the ASCII codes to corresponding bytes of the medical information file.

The medical information file is in a form that is processed by database software to update the medical database 36.

Internet Delivery System

A system for utilizing the internet to deliver medical reports in real-time will now be described with reference to Figs. 8 and 9. Typically, the reports are computer generated from records in a central database and are formatted either as text or graphics files. Additionally, the reports can be formatted as faxes, letters, etc. An example of a central database is described in the '117 patent and includes information downloaded over the telephone system from AIRWATCH devices.

A report requester utilizes a browser executing on a client computer 30 to access a report request page by supplying a designated URL.

The host computer 32 generates a report request HTML document including a FORM to allow feedback from a client computer displaying the report request document using a browser application.

The report requester enters passwords for accessing a particular patient's records. The requestor also indicates the desired format of the report, e.g., a graph, table, or other format. When the requestor completes filling out the form the information entered is transferred to the form

Received from < > at 2/27/03 7:32:09 PM [Eastern Standard Time]

reporting server application executing on the host computer 32 utilizing the common gateway interface (CGI).

A form reporting server application invokes a report delivery script which first checks the codes to confirm that the requester is authorized to access the records. The script then invokes report generating software which generates a report file.

If the report file is a text file then the report delivery script converts the file to an HTML report file an transfers the report file to the client computer to be displayed by the browser application. If the report file is a graphics file it is converted by the report delivery script into a graphics file type that can be displayed by the browser or a browser helper application or plug-in and transfers the compatible graphics report file to the client computer to be displayed by the browser application.

In a preferred embodiment, the report files are Postscript® files which are converted by the server report delivery software to .GIF files before transfer to the client computer. Formats of reports are depicted in the above-referenced patent application.

Alternatively, an interactive requestor user interface can be implemented utilizing a Java applet.

Thus, physicians, health officials, and other medical personnel have real-time access to database records stored at a central location.

The invention has now been described with reference to the preferred embodiments. Alternatives and substitutions will now be apparent to persons of skill in the art. For example, the keyboard interface of a PC has been described. However, the principles of the invention are equally applicable to other platforms including Macintosh® and UNIX. Further, the preferred embodiment utilizes the WWW. Again, other network implementations are within the scope of the invention. Accordingly, it is not intended to limit the invention except as provided by the appended claims.

Received from < > at 2/27/03 7:32:09 PM [Eastern Standard Time]

WHAT IS CLAIMED IS:

1. An adapter for connecting a medical device to a client computer, with the medical device of the type that outputs a digital medical file organized into one or a plurality of words including digital medical measurement data, a modulating system for converting the digital medical file into analog signals for to transmission over the telephone lines to a central location, and with the client computer having a keyboard connector for receiving keyboard input in the form of key codes generated by the keyboard and executing a browser application which displays a data transfer page generated by a host computer and inputs said key codes and transmits the key codes to the host computer, said adapter comprising:

a demodulating unit, coupled to the modulating system of said medical device, for demodulating the transmitted analog signals to recover said digital medical file;

a conversion unit for converting each word of a recovered digital medical file to a corresponding key code;

an interface, connectable to said keyboard connector, for emulating a keyboard and transferring said corresponding key codes to be processed as keyboard data by said client computer so that the data transfer page can input the corresponding key codes and transmit the corresponding key codes to the host computer for processing.

2. A system for connecting a medical device to a central database, said system comprising:

a host computer, connected to a network and executing a server program that receives key codes and converts the codes to corresponding words to reconstruct a digital medical file encoded by the key codes received, and for providing a reconstructed medical file to a central database;

a client computer, connected to a network and having a keyboard connector for receiving keyboard input in the form

Received from < > at 2/27/03 7:32:09 PM [Eastern Standard Time]

of key codes generated by the keyboard and executing a browser application which displays a data transfer page generated by the host computer and that inputs said key codes and transmits the key codes to the server program executing on the host computer;

an adapter for connecting a medical device to a client computer, with the medical device of the type that outputs a digital medical file organized into one or a plurality of words including digital medical measurement data, a modulating system for converting the digital medical file into analog signals for to transmission over the telephone lines to a central location, and with the client computer having a keyboard connector for receiving keyboard input in the form of key codes generated by the keyboard and executing a browser application which displays a data transfer page generated by a host computer and inputs said key codes and transmits the key codes to the host computer, said adapter comprising:

a demodulating unit, coupled to the modulating system of said medical device, for demodulating the transmitted analog signals to recover said digital medical file;

a conversion unit for converting each word of a recovered digital medical file to a corresponding key code;

an interface, connectable to said keyboard connector, for emulating a keyboard and transferring said corresponding key codes to be processed as keyboard data by said client computer so that the data transfer page can input the corresponding key codes and transmit the corresponding key codes to the host computer for processing.

3. An adapter for connecting a medical device to a client computer, with the medical device of the type that outputs a digital medical file organized into one or a plurality of words including digital medical measurement data, a modulating system for converting the digital medical file

Received from < > at 2/27/03 7:32:09 PM [Eastern Standard Time]

into analog signals for to transmission over the telephone lines to a central location, and with the client computer having a keyboard connector for receiving keyboard input in the form of key codes generated by the keyboard and executing a browser application which displays a data transfer page generated by a host computer and inputs said key codes and transmits the key codes to the host computer, said adapter comprising:

a conversion unit for converting each word of an output digital medical file to a corresponding key code; and

an interface, connectable to said keyboard connector, for emulating a keyboard and transferring said corresponding key codes to be processed as keyboard data by said client computer so that the data transfer page can input the corresponding key codes and transmit the corresponding key codes to the host computer for processing.

4. A system for connecting a medical device to a central database, said system comprising:

a host computer, connected to a network and executing a server program that receives key codes and converts the codes to corresponding words to reconstruct a digital medical file encoded by the key codes received, and for providing a reconstructed medical file to a central database;

a client computer, connected to a network and having a keyboard connector for receiving keyboard input in the form of key codes generated by the keyboard and executing a browser application which displays a data transfer page generated by the host computer and that inputs said key codes and transmits the key codes to the server program executing on the host computer;

an adapter for connecting a medical device to the client computer, with the medical device of the type that outputs a digital medical file organized into one or a plurality of words including digital medical measurement data, a modulating system for converting the digital medical file into analog signals for to transmission over the telephone

Received from < > at 2/27/03 7:32:09 PM [Eastern Standard Time]

lines to a central location, and with the client computer having a keyboard connector for receiving keyboard input in the form of key codes generated by the keyboard and executing a browser application which displays a data transfer page generated by a host computer and inputs said key codes and transmits the key codes to the host computer, said adapter comprising:

a conversion unit for converting each word of a digital medical file to a corresponding key code;

an interface, connectable to said keyboard connector, for emulating a keyboard and transferring said corresponding key codes to be processed as keyboard data by said client computer so that the data transfer page can input the corresponding key codes and transmit the corresponding key codes to the host computer for processing.

5. A system for connecting a medical device to a central database, said system comprising:

a host computer, connected to a network and executing a server program that receives key codes and converts the codes to corresponding words to reconstruct a digital medical file encoded by the key codes received, and for providing a reconstructed medical file to a central database;

a client computer, connected to a network and having a keyboard connector configured to receive keyboard input in the form of key codes generated by the keyboard and executing, said client computer for receiving a medical information file from the medical device formatted as key codes and executing a browser application which displays a data transfer page generated by the host computer and that inputs said key codes of the medical information file and transmits the key codes to the server program executing on the host computer.

6. A system for delivering medical reports generated at a central location and utilizing information stored in a central database, said system comprising:

Received from < > at 2/27/03 7:32:09 PM [Eastern Standard Time]

a client computer, connected to a network, executing a browser application displaying a report requesting document for transferring, over the network password information and request format information to a report generating server application;

a host computer, connected to the network, executing said report generating server application, with said report generating server application for invoking report generating software to generate a report file in a browser compatible format, and for transferring the report file to the client computer over the network to be displayed by the browser application executing on the client computer.

7. A system for implementing a universal front-end for a medical measurement device, said system comprising:

a personal computer, connected to a network and including standard I/O ports and a display device;

a data output interface, coupled to a medical measurement device, for providing compatible medical information data including medical information in a digital format compatible with a standard input port of said personal computer;

a processor included in said personal computer, executing web-browser software to display a front-end page and configured to process received medical information data provided by said medical measurement device and to display the results of a medical measurement utilizing the display device.

8. The system of claim 7 where said data output interface provides compatible medical information in the form of key codes compatible with a keyboard interface of a personal computer.

9. A system for providing medical measurement information output by a medical measurement devices to a central database, said system comprising:

a host computer, connected to a network and executing a server program and database software for receiving

Received from < > at 2/27/03 7:32:09 PM [Eastern Standard Time]

medical information data encoded in an output format utilized by web-browser applications, said host computer configured to process received medical information data to enter medical information into said database;

a client computer, connected to a network and including standard I/O ports and a display device;

a data output interface, coupled to a medical measurement device, for providing compatible medical information data including medical information in a digital format compatible with a standard input port of said personal computer; and

a processor included in said personal computer, executing web-browser software to display a data-communication page and configured to process received medical information data provided by said medical measurement device, and to transfer received medical information data over a network to said host computer.

10. A system medical information management system for receiving medical information measured by a plurality of medical measurement devices and providing the information to a personal computer, said system comprising:

a bus, having a plurality of input ports for coupling to one of the medical devices; and

a data collector, coupled to said bus, and including a data output interface, for providing compatible medical information data, including medical information received from each input port of said bus, converted to a digital format compatible with a standard input port of the personal computer.

11. The system of claim 10 wherein;

said bus is the wiring system of a home.

12. A system for implementing a universal front-end for a medical measurement device, said system comprising:

a personal computer, connected to a network and including standard I/O ports and a display device;

Received from < > at 2/27/03 7:32:09 PM [Eastern Standard Time]

a data output interface, coupled to a medical measurement device, for providing compatible medical information data including medical information converted to a digital format compatible with a standard input port of said personal computer;

a processor included in said personal computer, executing web-browser software to display a front-end page and configured to process received medical information data provided by said medical measurement device, to transmit said information over the network to a health-care provider.

13. The system of claim 12 wherein:

said processor is further configured to establish a connection over the network to facilitate real-time communication between a health-care provider and a patient concerning the results of a medical measurement.

14. A system for implementing an enhanced interface for a medical measurement device, said system comprising:

a web appliance, connected to a network and including standard I/O ports and a display device;

a data input/output interface, coupling the medical measurement device and the web appliance, for transmitting compatible information data, from the medical measurement device, in a digital format compatible for processing by said web appliance and for transmitting medical measurement device control information from the web appliance to the medical measurement device;

a processor included in said web appliance, executing web-browser software to display a front-end page and configured to process information data provided by said medical measurement device and to display a result page displaying parameter values relating to the operation of the medical device and for displaying interactive function keys to activate functions in the medical device.

Received from < > at 2/27/03 7:32:09 PM [Eastern Standard Time]

15. A system for implementing a hardware key for a medical measurement device to gain access to a remote database, said system comprising:

a web appliance, connected to a network and including standard I/O ports and a display device;

a data output interface, coupled to a medical measurement device, for providing medical measurement device identification data to said web appliance;

a remote database server coupled to the web, said database server for providing user data when a identification data associated with a user is received;

a processor included in said web appliance, executing web-browser software to display a front-end page and configured to transfer said medical identification data provided by said medical measurement device to said remote database server to gain access to data associated with a user of said medical measurement device.

16. A system medical information management system for receiving medical information measured by a plurality of medical measurement devices and providing the information to a personal computer, said system comprising:

a universal serial bus, having a plurality of input/output ports for coupling to one of the medical devices;

a web appliance coupled to the universal serial bus, with the web appliance with the web appliance including a executing web-browser software to display a front-end page and configured to process information data provided by said medical measurement device and to display a result page;

a telephone connection for connecting a medical device to a remote central data base.

Received from < > at 2/27/03 7:32:09 PM [Eastern Standard Time]

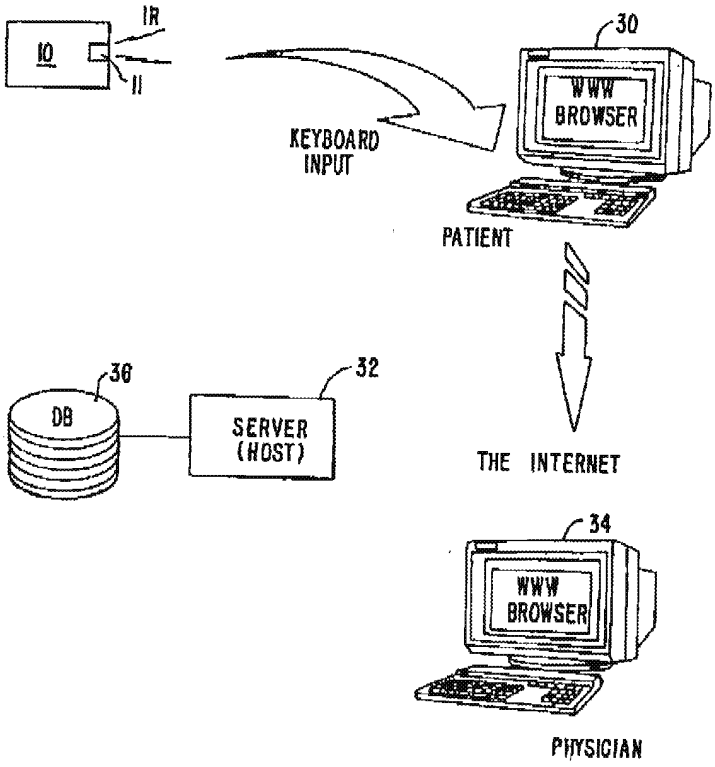

FIG. 1A.

Received from < > at 2/27/03 7:32:09 PM [Eastern Standard Time]

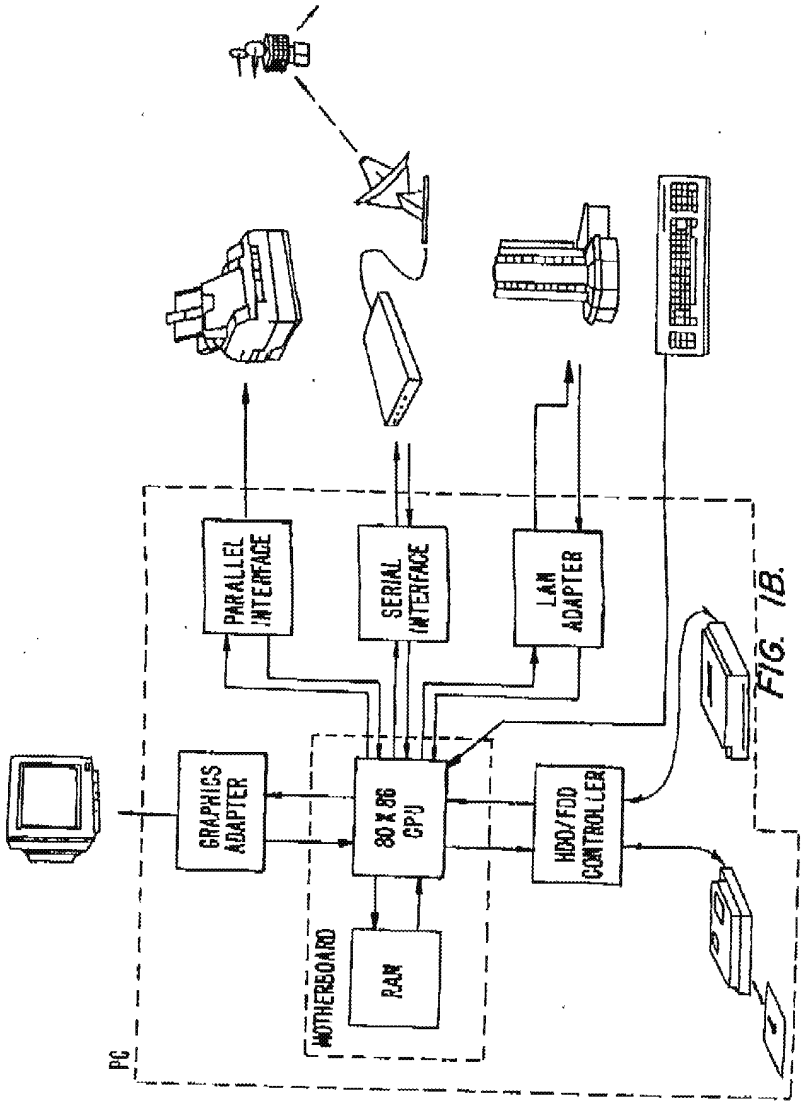

FIG. 1B.

Received from < > at 2/27/03 7:32:09 PM [Eastern Standard Time]

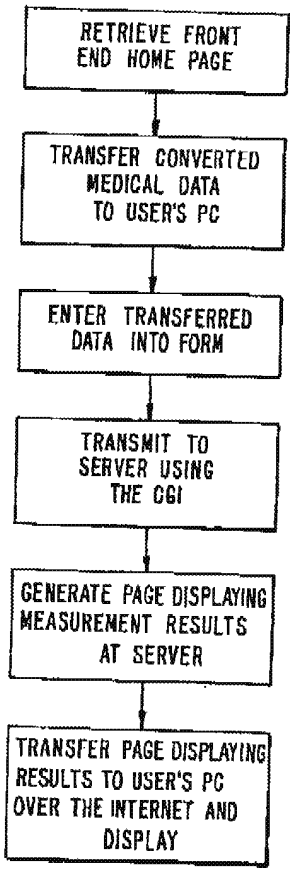

FIG. 2.

Received from < > at 2/27/03 7:32:09 PM [Eastern Standard Time]

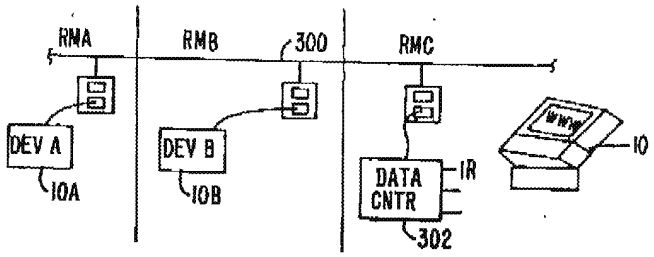

FIG. 3.

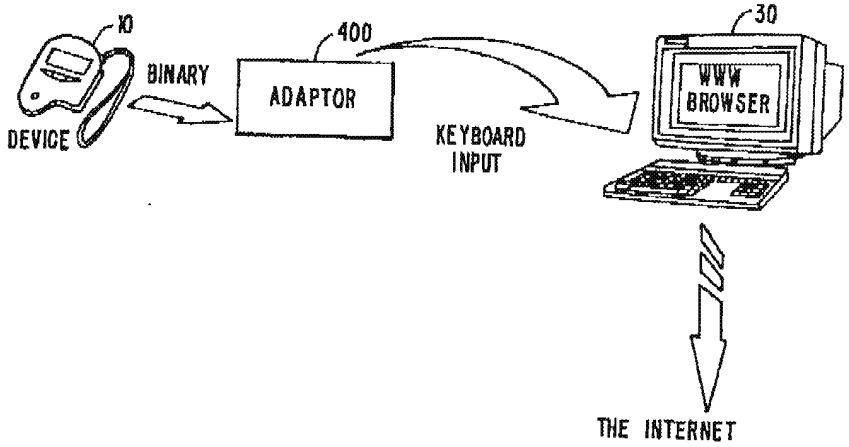

FIG. 4A.

Received from < > at 2/27/03 7:32:09 PM [Eastern Standard Time]

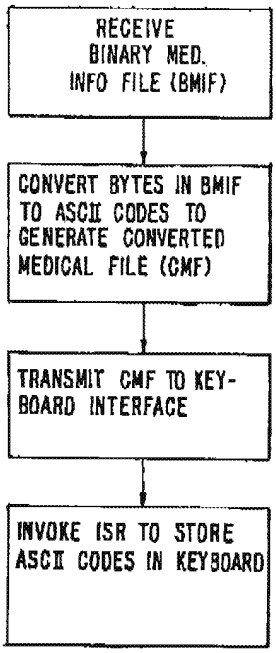

FIG. 4B.

Received from < > at 2/27/03 7:32:09 PM [Eastern Standard Time]

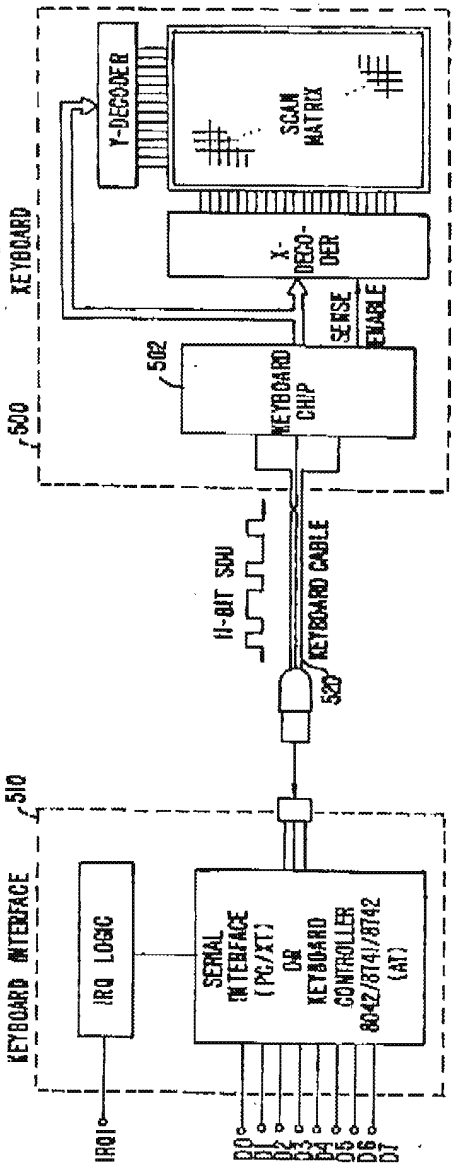

FIG. 5. PRIOR ART

Received from < > at 2/27/03 7:32:09 PM [Eastern Standard Time]

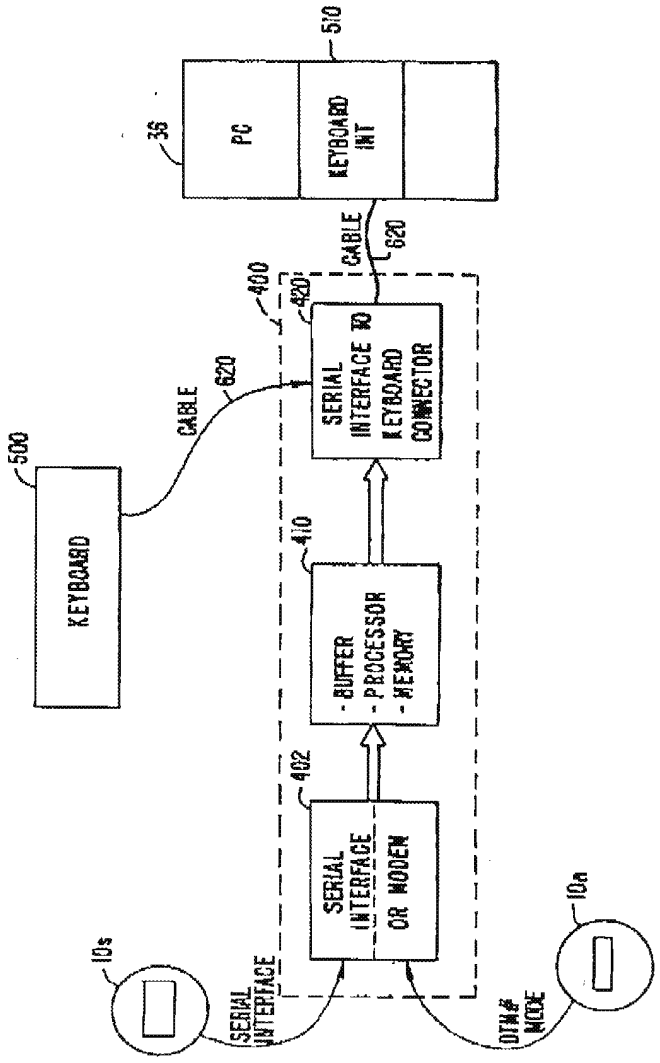

FIG 6A.

Received from < > at 2/27/03 7:32:09 PM [Eastern Standard Time]

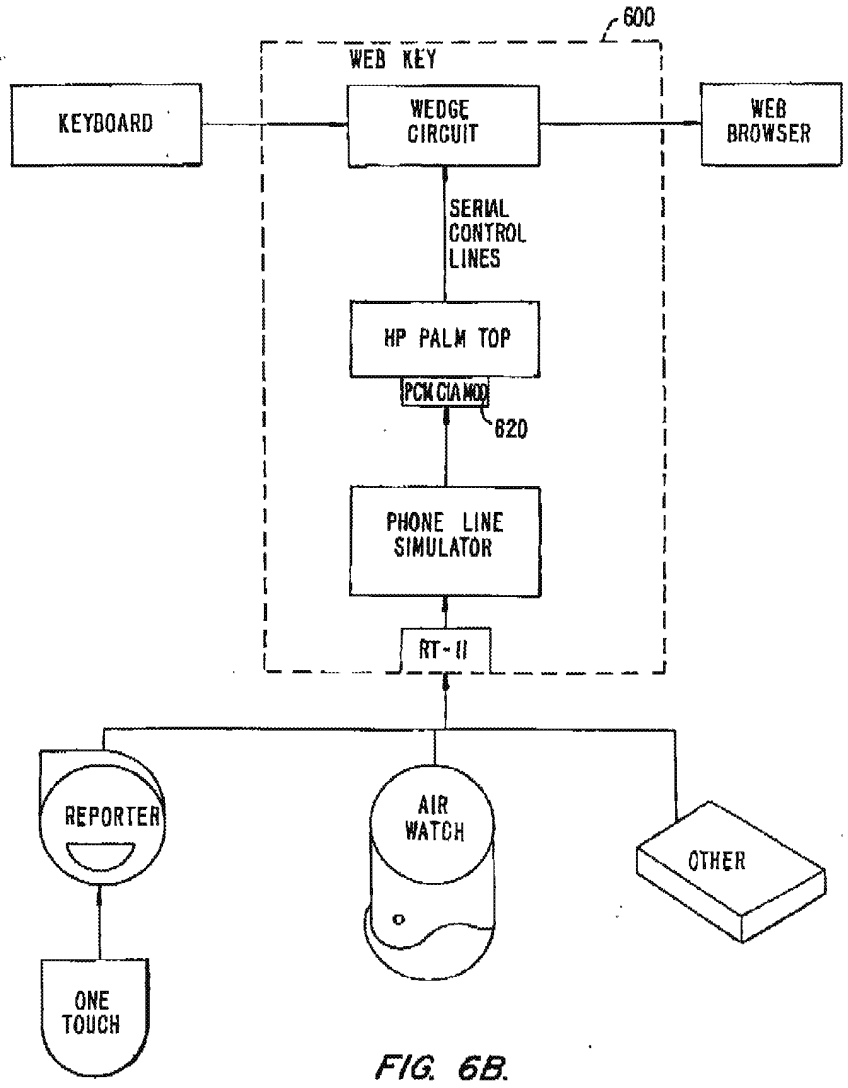

FIG. 6B.

Received from < > at 2/27/03 7:32:09 PM [Eastern Standard Time]

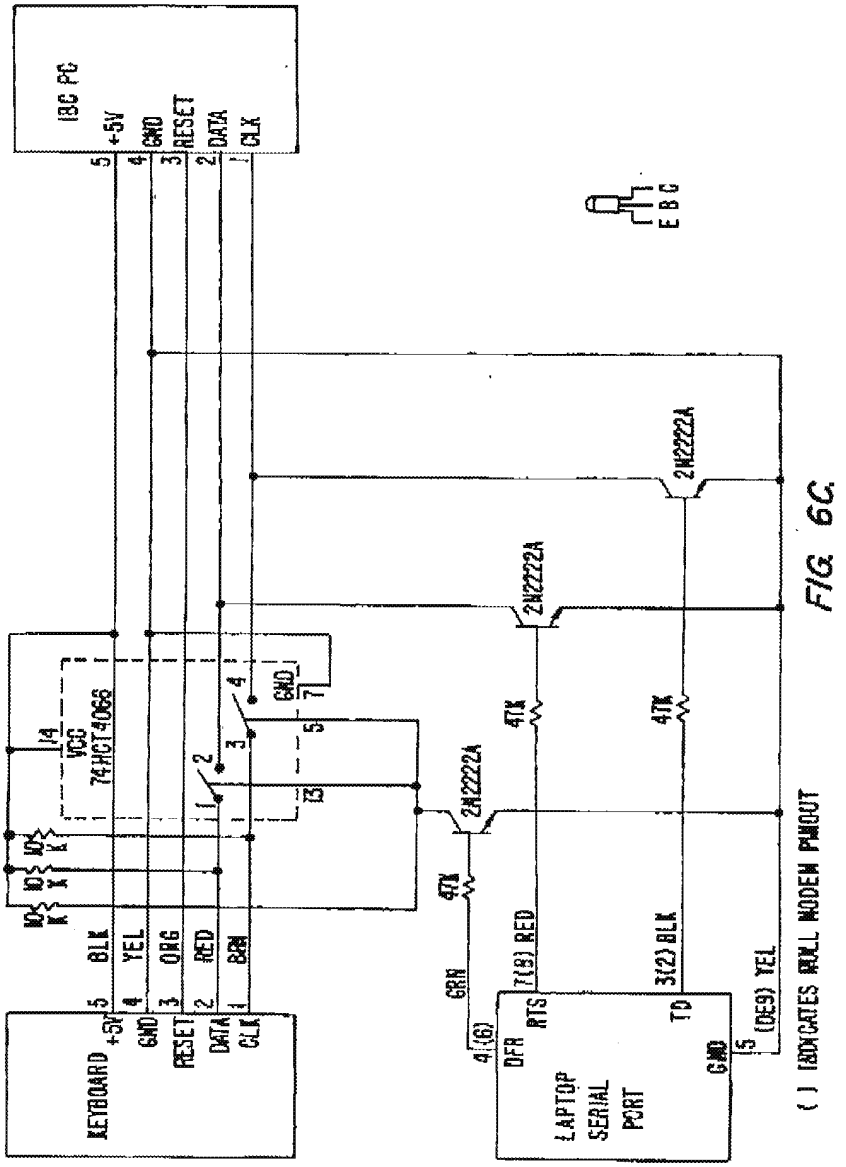

FIG 6C

Received from < > at 2/27/03 7:32:09 PM [Eastern Standard Time]

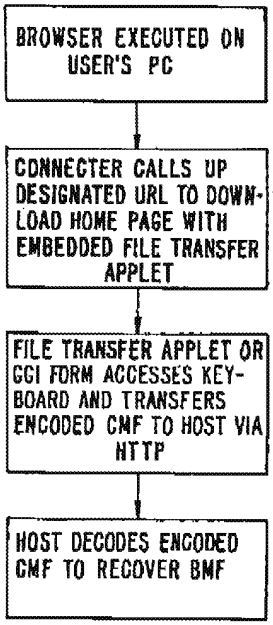

FIG. 7.

Received from < > at 2/27/03 7:32:09 PM [Eastern Standard Time]

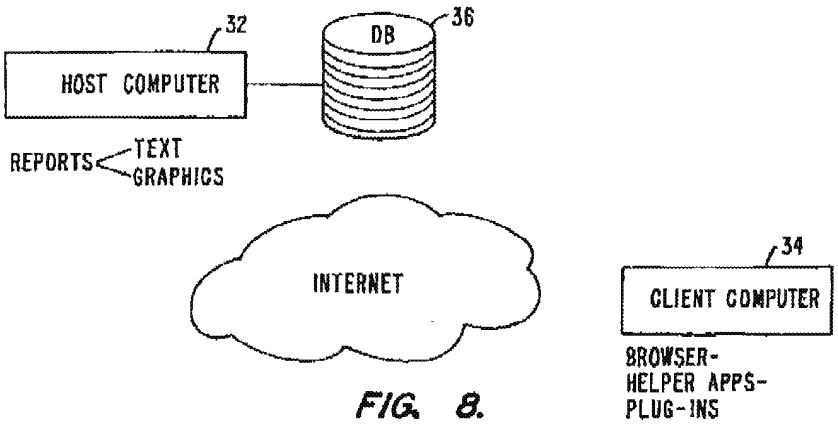

FIG. 8.

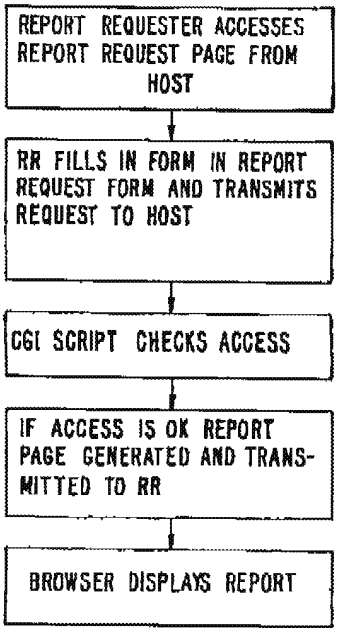

FIG. 9.

Received from < > at 2/27/03 7:32:09 PM [Eastern Standard Time]

PCT WORLD INTELLECTUAL PROPERTY ORGANIZATION International Bureau

INTERNATIONAL APPLICATION PUBLISHED UNDER THE PATENT COOPERATION TREATY (PCT)

(51) International Patent Classification 6 : G06F 17/30 — A2

(11) International Publication Number: WO 99/41682

(43) International Publication Date: 19 August 1999 (19.08.99)

(21) International Application Number: PCT/US99/02970

(22) International Filing Date: 12 February 1999 (12.02.99)

(30) Priority Data:
60/075,002 17 February 1998 (17.02.98) US
60/093,128 16 July 1998 (16.07.98) US

(71) Applicant *(for all designated States except US)*: SOUTHERN RESEARCH INSTITUTE [US/US]; P.O. Box 55305, Birmingham, AL 35255-5305 (US).

(72) Inventors; and

(75) Inventors/Applicants *(for US only)*: DEAN, Alan, Hoyt [US/US]; 4401 Little River Road, Birmingham, AL 35213 (US). JOHNSON, David, Wayne [US/US]; 204 Inverness Cliffs, Birmingham, AL 35242 (US). HANNAH, Sidney, Joel [US/US]; Building 2, Suite 112, 9238 Highway 20 West, Madison, AL 35758 (US).

(74) Agents: FLOAM, D., Andrew et al.; Needle & Rosenberg, P.C., 127 Peachtree Street, N.E., Atlanta, GA 30303 (US).

(81) Designated States: AL, AM, AT, AU, AZ, BA, BB, BG, BR, BY, CA, CH, CN, CU, CZ, DE, DK, EE, ES, FI, GB, GD, GE, GH, GM, HR, HU, ID, IL, IN, IS, JP, KE, KG, KP, KR, KZ, LC, LK, LR, LS, LT, LU, LV, MD, MG, MK, MN, MW, MX, NO, NZ, PL, PT, RO, RU, SD, SE, SG, SI, SK, SL, TJ, TM, TR, TT, UA, UG, US, UZ, VN, YU, ZW, ARIPO patent (GH, GM, KE, LS, MW, SD, SZ, UG, ZW), Eurasian patent (AM, AZ, BY, KG, KZ, MD, RU, TJ, TM), European patent (AT, BE, CH, CY, DE, DK, ES, FI, FR, GB, GR, IE, IT, LU, MC, NL, PT, SE), OAPI patent (BF, BJ, CF, CG, CI, CM, GA, GN, GW, ML, MR, NE, SN, TD, TG).

Published

Without international search report and to be republished upon receipt of that report.

(54) Title: PATIENT DATA ACQUISITION UNIT AND DATA SUPPORT SYSTEM

(57) Abstract

A system for collecting patient data from patients featuring at least one mobile computing device, such as personal digital assistant (PDA) unit, that stores data representing predetermined medical forms to be populated with information collected from patients via the personal digital assistant (PDA) unit and at least one supporting application server. The PDA unit stores a software program to be executed by the processor to facilitate patient data entry in accordance with a predetermined medical form. The PDA unit is capable of connecting to a supporting application server via modem or through direct connection or indirectly through a computer network. The application server maintains and organizes scheduling information for both patients and their assigned healthcare professionals, contains data representing predetermined medical forms to be populated with patient health status information obtained via the personal digital assistant unit, and receives, formats, and preserves the data for export and use by other data processing systems.

Received from < > at 2/27/03 7:32:09 PM [Eastern Standard Time]

FOR THE PURPOSES OF INFORMATION ONLY

Codes used to identify States party to the PCT on the front pages of pamphlets publishing international applications under the PCT.

AL	Albania	ES	Spain	LS	Lesotho	SI	Slovenia
AM	Armenia	FI	Finland	LT	Lithuania	SK	Slovakia
AT	Austria	FR	France	LU	Luxembourg	SN	Senegal
AU	Australia	GA	Gabon	LV	Latvia	SZ	Swaziland
AZ	Azerbaijan	GB	United Kingdom	MC	Monaco	TD	Chad
BA	Bosnia and Herzegovina	GE	Georgia	MD	Republic of Moldova	TG	Togo
BB	Barbados	GH	Ghana	MG	Madagascar	TJ	Tajikistan
BE	Belgium	GN	Guinea	MK	The former Yugoslav Republic of Macedonia	TM	Turkmenistan
BF	Burkina Faso	GR	Greece			TR	Turkey
BG	Bulgaria	HU	Hungary	ML	Mali	TT	Trinidad and Tobago
BJ	Benin	IE	Ireland	MN	Mongolia	UA	Ukraine
BR	Brazil	IL	Israel	MR	Mauritania	UG	Uganda
BY	Belarus	IS	Iceland	MW	Malawi	US	United States of America
CA	Canada	IT	Italy	MX	Mexico	UZ	Uzbekistan
CF	Central African Republic	JP	Japan	NE	Niger	VN	Viet Nam
CG	Congo	KE	Kenya	NL	Netherlands	YU	Yugoslavia
CH	Switzerland	KG	Kyrgyzstan	NO	Norway	ZW	Zimbabwe
CI	Cote d'Ivoire	KP	Democratic People's Republic of Korea	NZ	New Zealand		
CM	Cameroon			PL	Poland		
CN	China	KR	Republic of Korea	PT	Portugal		
CU	Cuba	KZ	Kazakstan	RO	Romania		
CZ	Czech Republic	LC	Saint Lucia	RU	Russian Federation		
DE	Germany	LI	Liechtenstein	SD	Sudan		
DK	Denmark	LK	Sri Lanka	SE	Sweden		
EE	Estonia	LR	Liberia	SG	Singapore		

Received from < > at 2/27/03 7:32:09 PM [Eastern Standard Time]

WO 99/41682 PCT/US99/02970

PATIENT DATA ACQUISITION UNIT AND DATA SUPPORT SYSTEM

RELATED APPLICATION

This application claims priority to U.S. Provisional Application No. 60/075,002, filed February 17, 1998, entitled "Data Collection Unit for Medical Practitioners" and to U.S. Provisional Application No. 60/093,128 filed July 16, 1998, entitled "Patent Data Acquisition and Support System for Nurses."

FIELD OF THE INVENTION

The present invention is directed to the collection of patient data, and more particularly to a patient data acquisition unit and data support system.

BACKGROUND OF THE INVENTION

There is an ever increasing need to automate the collection of patient data in the health care industry. This is true whether the data is collected from patients in hospitals or patients under home health care. Home health care, however, is a growing industry where automation has not occurred as rapidly as needed.

Services being provided in the patients' home range from monitoring patient conditions during recovery from hospital care to continuous monitoring by an in-home nurse or aide. Patient data collection is necessary to monitor long term trends in patient status as well as to facilitate the practice of physicians and nursing staff. It is also useful for billing purposes.

Up until recently, all data collection has been accomplished through the use of paper medical forms which are manually filled out during or after the visit by the visiting nurse or aide. There has been an effort made to improve the accuracy and legibility of the patient data. Personal laptop computers are being considered as a data collection tool. However, personal laptop computers are still fairly expensive and too large for light and portable applications. In addition, many patients find them intimidating and obtrusive.

Received from < > at 2/27/03 7:32:09 PM [Eastern Standard Time]

What is needed is a system by which a small inexpensive electronic data collection tool can be used in the field to help automate data collection of patient status.

SUMMARY OF THE INVENTION

Briefly, the present invention is directed to a system for collecting health data from patients. The system comprises mobile computing devices which can be connected to one or more supporting computing devices to achieve the exchange of information between them. In its simplest configuration, the system consists of at least one personal digital assistant (PDA) unit that interfaces with at least one application server processor. The PDA is a mobile processor containing a program for acquiring data from patients using a suite of sensors, audible input, and/or manual input. The application server is used to transmit visit schedules to the PDA, recover patient data from the PDA following visits, and to store patient health data obtained from the PDAs. This minimum system will usually be expanded by adding additional database and communication servers in a networked architecture to support a plurality of PDAs.

The PDA unit comprises a processor and a memory and stores a software program which is executed by the processor to facilitate patient data entry in accordance with a predetermined medical form. The PDA unit is capable of connecting to the application server via direct connection or through a modem. The application server transmits data representing the predetermined medical forms to the PDA unit and receives from the PDA unit data representing populated medical forms. These data are typically processed further in preparation for their transmission to a larger patient records database.

In addition, the present invention is directed to the combination of a PDA and a sensor interface that connects with one or more patient data sensors for collecting health status information from the patient and automatically populating the medical forms in the personal digital assistant with the acquired data.

Other objects and advantages of the present invention will become more readily apparent when reference is made to the following description taken in conjunction with the accompanying drawings.

Received from < > at 2/27/03 7:32:09 PM [Eastern Standard Time]

BRIEF DESCRIPTION OF THE DRAWINGS

Figure 1 is a block diagram of a system for collecting patient data according to the present invention.

Figure 2 is a block diagram of a personal digital assistant unit and a sensor interface according to one embodiment of the present invention.

Figure 3 is a block diagram of one embodiment the sensor interface.

Figure 4 is a flow chart showing the general operation of the system according to the present invention.

Figure 5 is a flow chart showing the method by which patient data information is collected by a personal digital assistant unit according to the present invention.

Figures 6-15 are sample screens displayed on the personal digital assistant unit to prompt attending personnel to enter data to be populated into a medical form.

DETAILED DESCRIPTION OF A PREFERRED EMBODIMENT

Referring first to Figure 1, the patient data acquisition or collection system according to the present invention is shown generally at reference numeral 10. The system 10 comprises one or more mobile computing devices, such as personal digital assistants (PDAs) 20, and an application server 30. Connection of the application server 30 through a network 60 with other computer resources such as a communication server 50 and/or a database server 80 are typical approaches to expanding the system to handle a larger number of patients. The functions of the application server 30 and the database server 80 may reside in the same physical machine, or they may be distributed (as shown in Figure 1) as appropriate to the processing load anticipated for the system 10. The database server 80 organizes and maintains the collected patient medical information.

The PDA 20 is a well known piece of hardware that is capable of performing a variety of tasks. For example, the PDA 20 is PalmPilot™ PDA sold by 3Com Corporation, or a MobilePro™ PDA, sold by NEC. The PDA 20 receives software application functionalities from the application server 30. Other similar mobile computing devices are also suitable for use in accordance with the present invention.

Received from < > at 2/27/03 7:32:09 PM [Eastern Standard Time]

Depending on the make and model of the PDA 20, it interfaces with the application server 30 through a cradle interface 40, by telephonic connection via an internal or external modem (not shown) over a telephone network 70, or via a standard serial interface cable (not shown). These interfaces are well known in the art and therefore are not shown or described herein. The software applications that manage the downloading of new applications or new data to the PDA 20 reside in application server 30. As is known in the art, new software applications or new data are installed in the PDA 20 when the PDA 20 is connected to the application server 30 and a "synchronization" operation is initiated. Similarly, data collected and stored in the PDA 20 are downloaded to the application server 30 during a "synchronization" operation. Some PDAs 20 have the capability to support certain downloading functions whereby only specific data can be designated for exchange between the PDA 20 and the application server 30.

Some PDAs 20 have built in keyboards, while others, such as the PalmPilot™ PDA have a graphical user interface which includes handwriting or speech recognition software to facilitate manual or voice data entry, respectfully. In addition, the PDA 20 has a display (not shown) that can present information in black-white or color. Text may be entered by writing directly onto a digitizer tablet that overlies the display or which may be separate from it. In accordance with the present invention, the functionality of the PDA 20 is refocused from its use as a personal contact manager/scheduler to the specific needs of the health care industry.

The application server 30 is a computer that stores (in an internal memory or hard disk) data representing one or more predetermined medical forms to be populated with information from a plurality of patients. These forms may be changed from time-to-time. For example, a typical medical form may be one of the Outcome and Assessment Information Set (OASIS) forms or what is commonly referred to as Nurses Notes, from a patient visit. Information that is collected by the one or more PDAs 20 is ultimately stored in one or more databases which themselves, may reside on other dedicated computers.

The network 60 may be any standard computer network known in the art, such as an Ethernet™ network for use internally by a hospital or home health care business.

Received from < > at 2/27/03 7:32:09 PM [Eastern Standard Time]

Moreover, the network 60 could encompass data networks external to business, such as the Internet/World Wide Web.

Turning to Figure 2, a PDA 20 is shown together with a sensor interface/signal processor device 100 according to an alternative embodiment of the present invention. The sensor interface 100 connects to one or more patient data sensors 110 attached in, on or about the patient. Examples of sensors to which the sensor interface attaches are a temperature sensor, pulse/blood pressure sensor, blood glucose sensor, electronic scale, respiration monitor, etc. It is envisioned that as technologies develop, the sensor interface 100 may read data from microscopic in-body sensors in which a variety of medical information is derived from very small samples of a patient's biological fluids or tissues, or indirectly from other physical phenomena associated with the patient's body. The sensor interface 100 affords the ability to automatically read patient data sensors rather than requiring that the data be manually entered into the PDA 20.

An electrical block diagram for the sensor interface 100 is shown in Figure 3. Generally, the sensor interface 100 includes the ability to convert an analog output signal from a sensor to a digital signal suitable for storage by the PDA 20. For example, typical temperature sensors and blood pressure/pulse sensors may provide an analog output signal, while other sensors may provide a digital output. For those sensors that generate an analog output, one or several analog signal processor circuits 120 are provided to condition the analog output. An analog-to-digital converter (ADC) 130 converts the conditioned analog output to a digital signal. A digital data processor 140 connected to the ADC 130 processes the digital signal(s) representing the analog sensor output and organizes the information into a suitable data packet to be uploaded into a host device from the PDA 20. The sensor interface 100 may be powered by the PDA 20, or by an internal battery power conditioning supply 150. The sensor interface 100 connects to the PDA 20 by a standard cable, such as an RS-232 digital serial interface cable. The sensor interface 100 connects to the sensors 110 either by hardwire connection or by a wireless link via antenna 112. If a wireless link is employed the sensor interface 100 and sensors 110 would include suitable transmission and reception circuitry 160.

Received from < > at 2/27/03 7:32:09 PM [Eastern Standard Time]

Reference is now made to Figure 4, in conjunction with Figures 1-3, for a description of the operation of the PDA 20 and the patient data acquisition system 10 in general. In Figure 4, the application server 30 is referred to as the "MediFORM Application Processor." In step 300, patient schedules are entered into the application server 30 either manually or through a network accessible external computer that contains and updates patient schedule information. Next, in step 310, the application server 30 allocates attending personnel (nurses, nurse/aides, doctors, etc.) in accordance with the patient visitation schedule. Then, in step 320, the data representing the medical form(s) is downloaded from the application server 30 to PDAs 20 via the cradle interface 40, telephone network 70, etc. Typically, these data are used to generate one or more forms which are presented on the PDA 20 display to guide the user through the data collection process.

In step 330, the user of the PDA 20 enters the data (either manually, electronically or audibly) into the PDA 20 at the patient site. This process will be described in greater detail hereinafter in conjunction with Figure 5. The information that is downloaded to a PDA 20 may include instructions for the nurse or aide to collect data from a plurality of specified patients.

Once all of the data from a patient or patients are collected, in step 340, the PDA is coupled to the application server 30 to upload data representing the populated medical forms. Alternatively, the data may be uploaded via telephone network 70. The data are uploaded from the PDA 20 to the application server 30 where it is processed in step 350 and formatted for storage in a database. The processing described in this step may be as simple as converging data from several reports into a permanent patient record or may involve the conversion from one database format to another in order to interface with the existing databases of a healthcare provider.

Finally, in step 360 the data, now properly formatted representing the populated medical forms, are transferred to the database server 80 for storage.

Turning now to Figure 5, the manner in which the patient data are collected and entered into the PDA 20 (step 330 of Figure 4) will be described. If the PDA 20 supports only manual data entry in step 332, then in step 334, the user enters data into the PDA through standard PDA user interfaces (keyboard, handwriting or speech recognition, etc.). On the other hand, if the PDA 20 is augmented to support

Received from < > at 2/27/03 7:32:09 PM [Eastern Standard Time]

electronic and automatic data collection and entry via sensor interface 100, then in step 336, the sensor interface 100 is connected to the patient data sensors 110. Then, by initiating a procedure on the PDA 20, the sensor interface 100 triggers activation of the various patient sensors (if necessary) to obtain a reading of the related information, such as blood pressure/pulse rate, temperature, etc. Once the patient data sensors 110 make the information available, the sensor interface 100 reads the information from them, converts and/or processes the information as appropriate and uploads the information to the PDA 20. The PDA 20 receives the information and automatically populates the medical form for the patient.

Reference is now made to Figures 6-15 in which examples of the screens displayed on a typical PDA 20 are shown. Each screen includes icons or graphical button elements that can be selected by the user (with a stylus or some other means) to move to another screen containing additional information or data entry prompts.

Figure 6 illustrates an initial screen having two buttons: VISIT REPORT and VITAL STATISTICS. When the VISIT REPORT button is selected, the screen shown in Figure 7 is displayed. The screen in Figure 7 includes prompts to enter basic information about the particular patient and patient site being visited. This information is self explanatory. When all of this information is entered, the user selects the DONE button.

When the VITAL STATISTICS button is selected, the screen shown in Figure 8 is displayed. The VITAL STATISTICS screen includes data entry prompts for entering temperature, pulse rate, respiration, blood pressure, weight, and last bowel movement. All of this information may be entered manually, or as explained above, it may be entered electronically via the sensor interface 100. Another set of screens may be displayed to enter a variety of patient care information. These screens are shown in Figures 9-14, and are self-explanatory. The screens shown in Figures 9-14 are exemplary and in no way limit the expansion of these concepts to include other patient related information.

The last screen shown in Figure 15 is a general entry screen where general comments can be entered by the attending personnel into the PDA 20 using the PDA's text and speech recognition capabilities.

Received from < > at 2/27/03 7:32:09 PM [Eastern Standard Time]

In summary, the present invention is directed to a method of acquiring health data from patients comprising steps of: generating information representing a medical form to be populated with patient data collected from a plurality of patients; storing the information representing the medical form in a mobile computing device, such as portable digital assistant (PDA) unit; collecting patient health data from patients, inputting the patient health data into the PDA, and populating a medical form in the PDA unit with patient health data collected for each patient; and uploading data representing populated medical forms from the PDA unit to a database for storage therein. The information representing the medical form may initially reside on an application server, and the PDA unit receives the information over a communication network during a "synchronization" procedure or other dedicated downloading procedure.

Similarly, the present invention is directed to a system for collecting patient data from patients, comprising: a network supporting communication and exchange of information between devices connected thereto; an application server connected to the network that stores data representing a predetermined medical form to be populated with information collected from patients and for storage in a database; and at least one mobile computing device, such as a personal digital assistant (PDA) unit, comprising a processor and a memory, the memory of the PDA unit storing a software program and information representing the predetermined medical form received from the application server, the processor of the PDA unit executing the software program to populate the predetermined medical form with patient health data received as input to the PDA unit.

Finally, the present invention also is directed to the combination of a mobile computing device, such as a personal digital assistant (PDA) unit, and a sensor interface. The PDA unit comprises a processor and a memory, the memory of the PDA unit storing a software program and information representing a predetermined medical form received from the application server, the processor of the PDA unit executing the software program to populate the predetermined medical form with patient health data received as input to the PDA unit. The sensor interface receives the patient health data from one or more sensors attached to, implanted in or which otherwise derive information from the patient's body, wherein the PDA unit receives

Received from < > at 2/27/03 7:32:09 PM [Eastern Standard Time]

the patient health data from the sensor interface and automatically populates the medical form in the PDA unit with the patient health data.

The foregoing description is intended by way of example only and is not intended to limit the present invention in any way except as set forth in the following claims.

Received from < > at 2/27/03 7:32:09 PM [Eastern Standard Time]

What is claimed is:

1. A system for collecting patient data from patients, comprising:

a network supporting communication and exchange of information between devices connected thereto;

an application server connected to the network that stores data representing a predetermined medical form to be populated with information collected from patients and for storage in a database; and

at least one mobile computing device comprising a processor and a memory, the memory of the mobile computing device storing a software program and information representing the predetermined medical form received from the application server, the processor of the mobile computing device executing the software program to populate the predetermined medical form with patient health data received as input to the mobile computing device.

2. The system of claim 1, and further comprising a sensor interface that electrically connects to one or more patient data sensors for collecting patient data from the patient data sensors and automatically populating the medical forms in the mobile computing device with patient data sensor information.

3. The system of claim 1, and further comprising a database server connected to the network that supports and maintains the database of collected information.

4. The system of claim 1, wherein the mobile computing device is a personal digital assistant (PDA) unit.

5. A method for acquiring health data from patients comprising steps of:

generating information representing a medical form to be populated with patient data collected from a plurality of patients;

storing the information representing the medical form in a processor server;

Received from < > at 2/27/03 7:32:09 PM [Eastern Standard Time]

downloading the information representing the medical form to a portable digital assistant mobile computing device;

collecting patient health data from patients, inputting the patient health data into the mobile computing device, and populating a medical form in the mobile computing device with patient health data collected for each patient; and

uploading data representing populated medical forms from the mobile computing device to a database for storage therein.

6. The method of claim 5, wherein the step of collecting patient data comprises manually or audibly entering patient data observed by an attending personnel into the mobile computing device.

7. The method of claim 5, wherein the step of manually entering comprises displaying a plurality of screens each representing a subset of queries for types of patient data to be manually or audibly entered by the attending personnel.

8. The method of claim 5, wherein the step of collecting comprises connecting a sensor interface to the mobile computing device and to one or more patient data sensors, electronically reading the patient data sensors, uploading patient data sensor information into the mobile computing device.

9. The method of claim 8, and further comprising the step of automatically populating the medical form in the mobile computing device with data collected from the patient data sensors.

10. In combination, a mobile computing device comprising a processor and a memory, the memory of the mobile computing device storing a software program and information representing a predetermined medical form received from the application server, the processor of the mobile computing device executing the software program to populate the predetermined medical form with patient health data received as input to the mobile computing device, and a sensor interface that receives patient health data from one or more sensors attached to, implanted in or which

Received from < > at 2/27/03 7:32:09 PM [Eastern Standard Time]

otherwise derive information from the patient's body, wherein the mobile computing device receives the patient health data from the sensor interface and automatically populates a medical form stored in the mobile computing device with the patient health data.

11. A method of acquiring health data from patients comprising steps of:

generating information representing a medical form to be populated with patient data collected from a plurality of patients;

storing the information representing the medical form in a portable digital assistant (PDA) unit;

collecting patient health data from patients, inputting the patient health data into the PDA, and populating a medical form in the PDA unit with patient health data collected for each patient; and

uploading data representing populated medical forms from the PDA unit to a database for storage therein.

Received from < > at 2/27/03 7:32:09 PM [Eastern Standard Time]

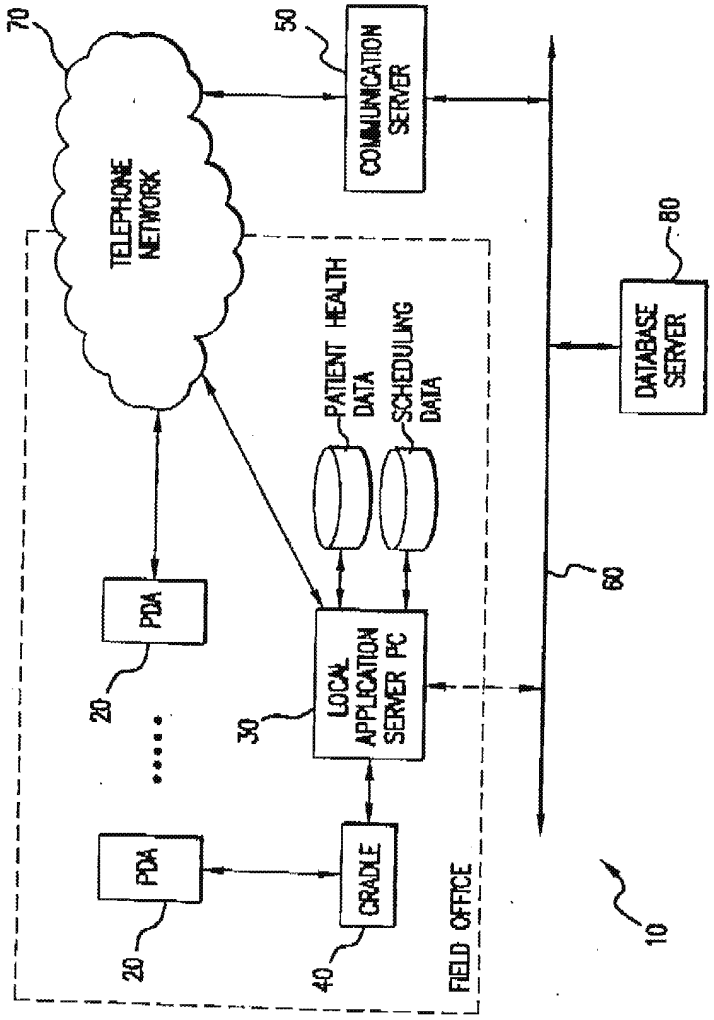

FIG.1

Received from < > at 2/27/03 7:32:09 PM [Eastern Standard Time]

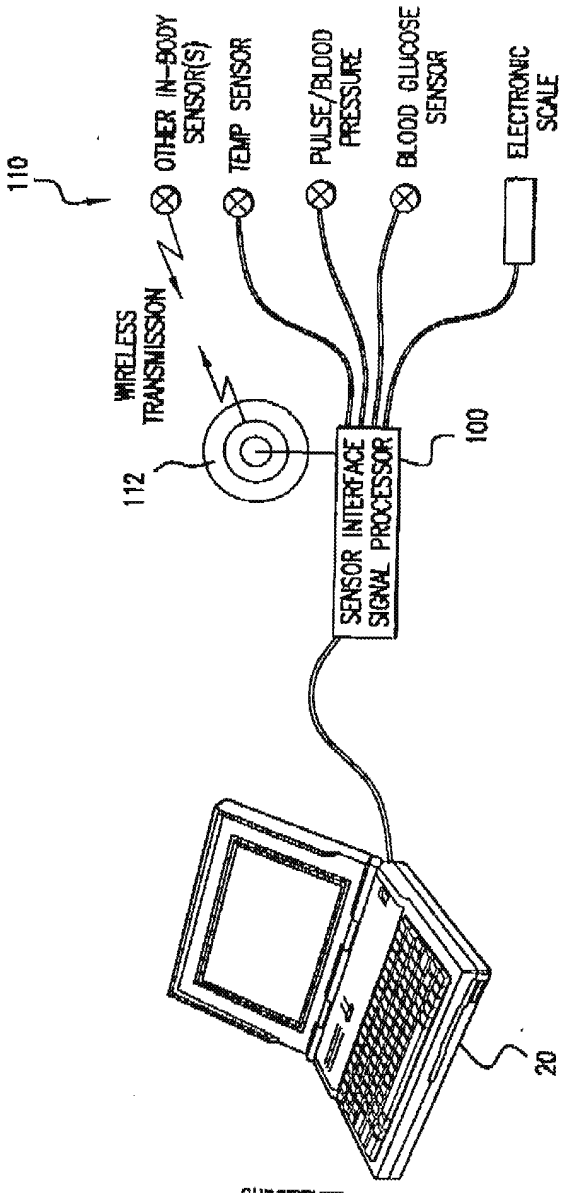

FIG.2

Received from < > at 2/27/03 7:32:09 PM [Eastern Standard Time]

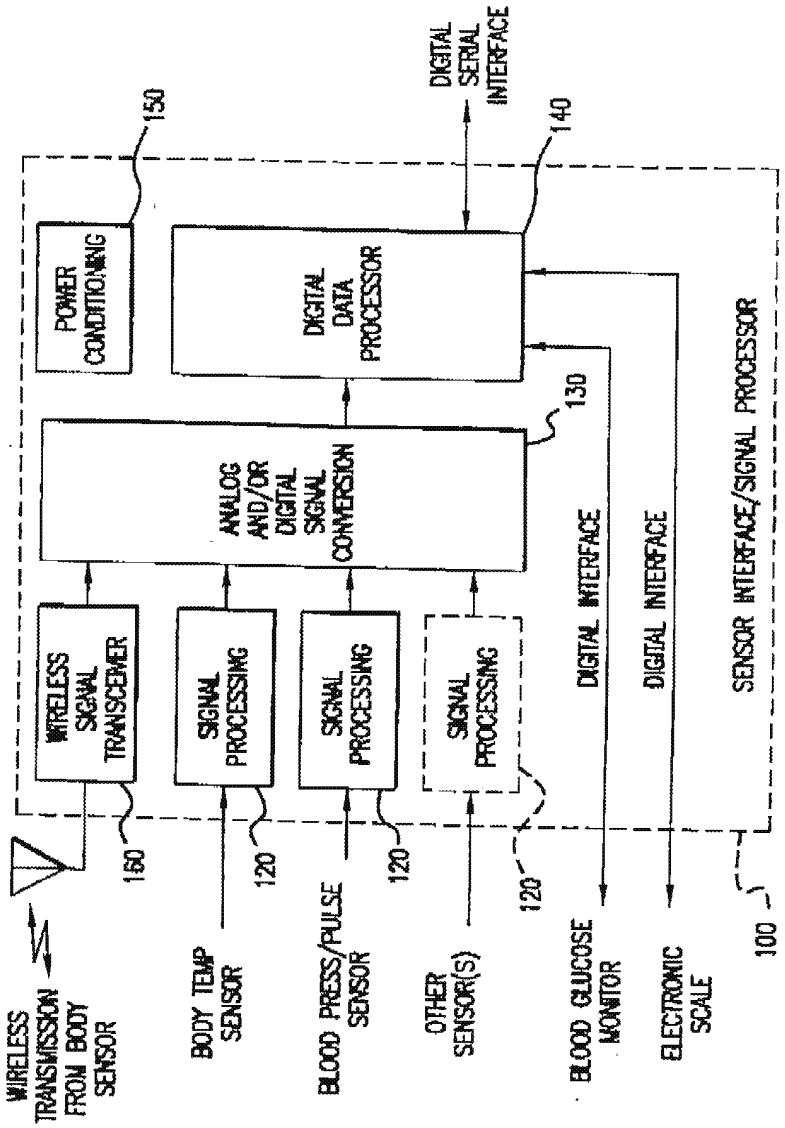

FIG.3

Received from < > at 2/27/03 7:32:09 PM [Eastern Standard Time]

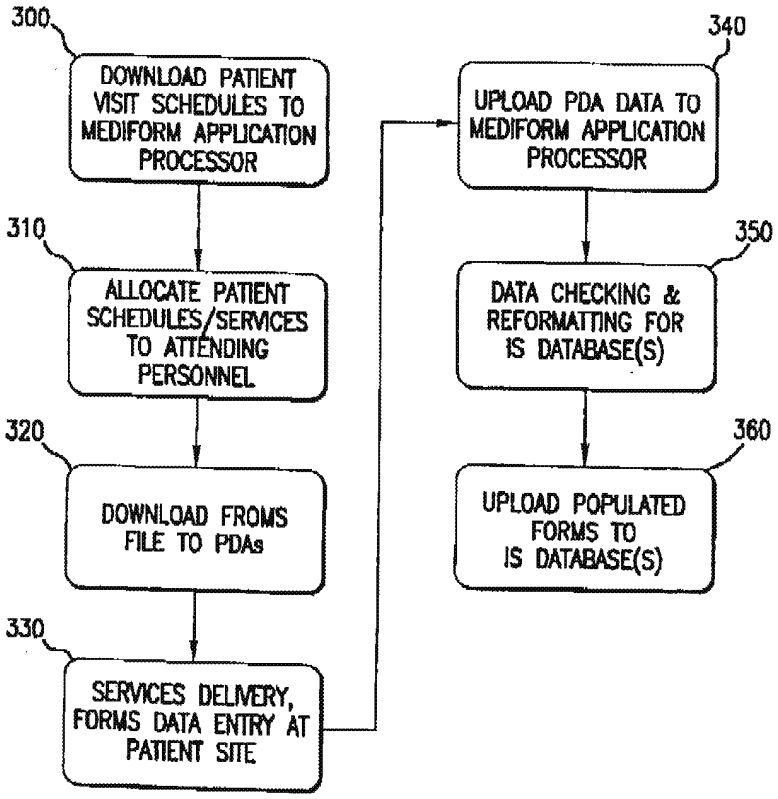

FIG.4

Received from < > at 2/27/03 7:32:09 PM [Eastern Standard Time]

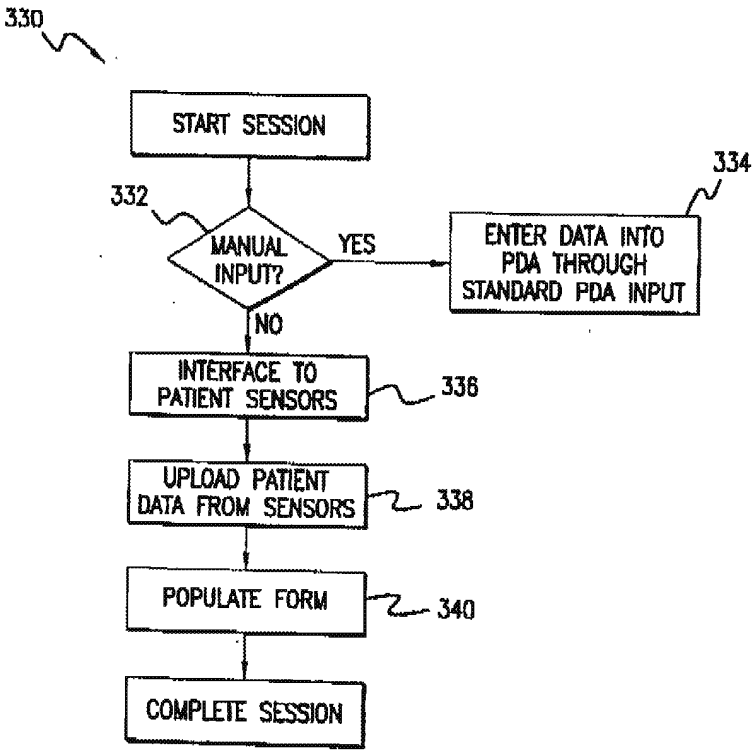

FIG.5

Received from < > at 2/27/03 7:32:09 PM [Eastern Standard Time]

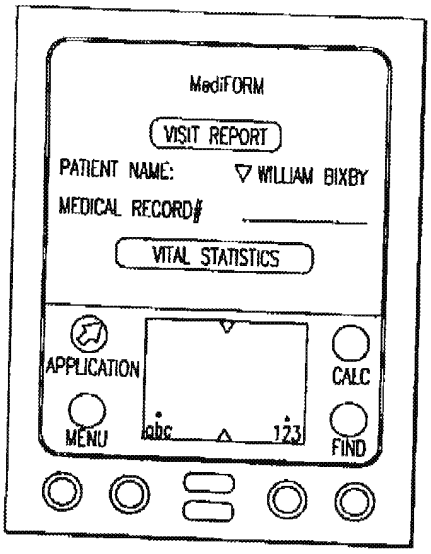

FIG.6

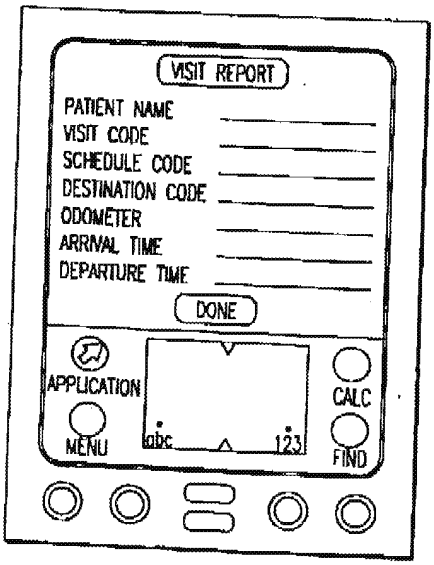

FIG.7

Received from < > at 2/27/03 7:32:09 PM [Eastern Standard Time]

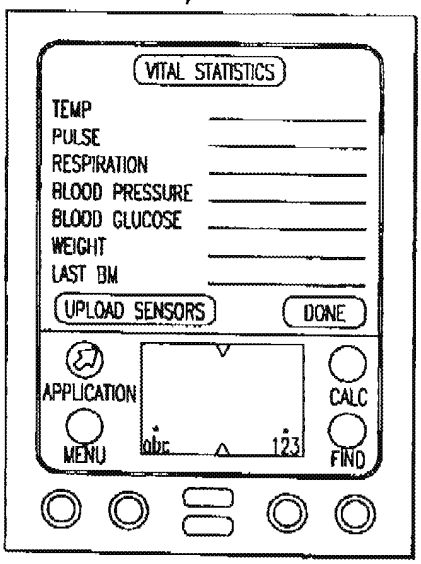

FIG.8

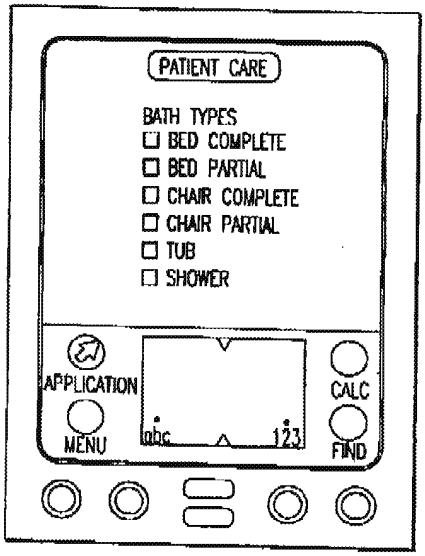

FIG.9

Received from < > at 2/27/03 7:32:09 PM [Eastern Standard Time]

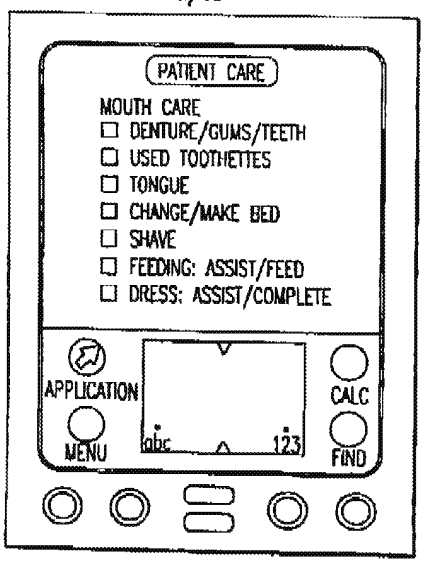

FIG.10

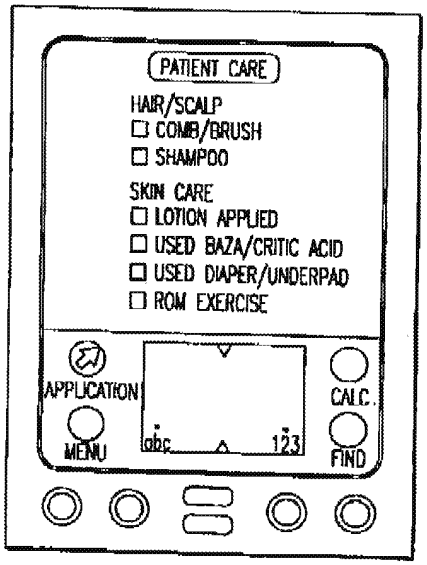

FIG.11

Received from < > at 2/27/03 7:32:09 PM [Eastern Standard Time]

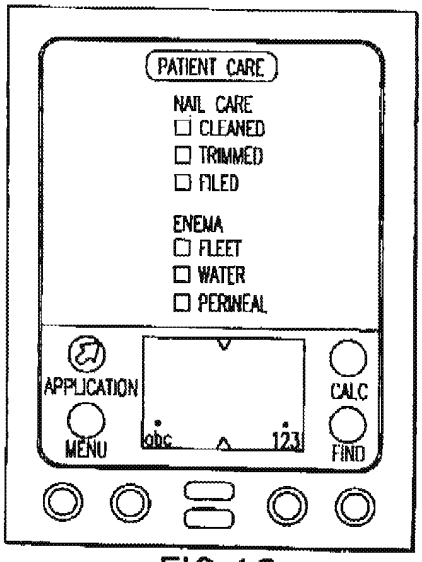

FIG.12

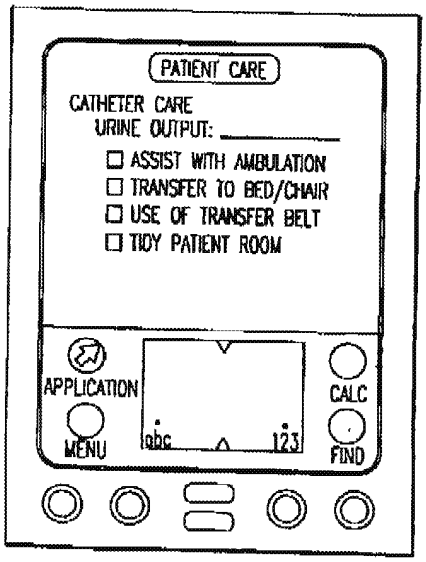

FIG.13

Received from < > at 2/27/03 7:32:09 PM [Eastern Standard Time]

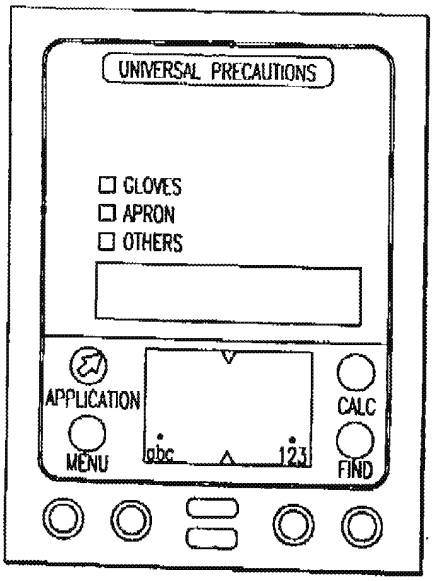

FIG.14

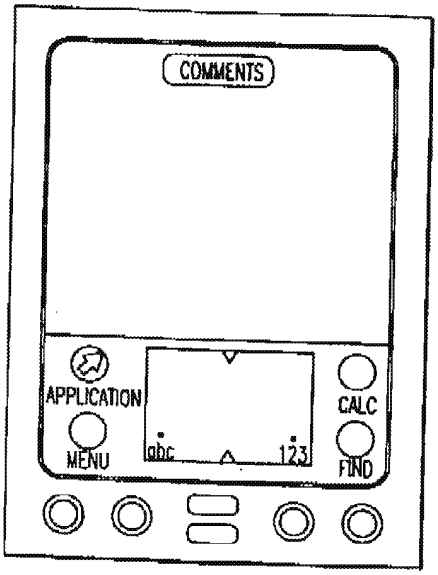

FIG.15

Received from < > at 2/27/03 7:32:09 PM [Eastern Standard Time]

P.B.5818 – Patentlaan 2
2280 HV Rijswijk (ZH)
+31 70 340 2040
TX 31651 epo nl
FAX +31 70 340 3016

Europäisches Patentamt
Zweigstelle in Den Haag Recherchen-abteilung

European Patent Office
Branch at The Hague Search division

Office européen des brevets
Département à La Haye Division de la recherche

VOSSIUS & PARTNER
Siebertstrasse 4
81675 München
ALLEMAGNE

EINGEGANGEN
Vossius & Partner
17. Feb. 2003
Frist
bearb.

Datum/Date
14.02.03

Zeichen/Ref./Réf.	Anmeldung Nr./Application No./Demande n°./Patent Nr./Patent No./Brevet n°.
G2039 EP	00989280.3-2201-US0034159

Anmelder/Applicant/Demandeur/Patentinhaber/Proprietor/Titulaire
Quy, Roger J.

COMMUNICATION

The European Patent Office herewith transmits as an enclosure the European search report for the above-mentioned European patent application.

If applicable, copies of the documents cited in the European search report are attached.

[X] Additional set(s) of copies of the documents cited in the European search report is (are) enclosed as well.

REFUND OF THE SEARCH FEE

If applicable under Article 10 Rules relating to fees, a separate communication from the Receiving Section on the refund of the search fee will be sent later.

EPO Form 1507.4 (03.95)

European Patent Office

SUPPLEMENTARY EUROPEAN SEARCH REPORT

Application Number
EP 00 98 9280

DOCUMENTS CONSIDERED TO BE RELEVANT

Category	Citation of document with indication, where appropriate, of relevant passages	Relevant to claim	CLASSIFICATION OF THE APPLICATION (Int.Cl.7)
Y	WO 98 24358 A (SANDERS MATTHEW H ;FENSON EITAN (US); ENACT HEALTH MANAGEMENT SYST) 11 June 1998 (1998-06-11) * claim 14 * * page 2, line 26 - page 3, line 5 * * page 6, line 1 - line 8 * * page 7, line 12 - line 18 *	1-37	G06F19/00
Y,D	US 5 772 586 A (OKKONEN HARRI ET AL) 30 June 1998 (1998-06-30) * column 2, line 21 - line 31 * * column 2, line 41 - line 50 * * column 4, line 16 - line 27 * * column 4, line 58 - column 5, line 3 *	1-37	
Y	WO 99 41682 A (JOHNSON DAVID WAYNE ;SOUTHERN RES INST (US); DEAN ALAN HOYT (US);) 19 August 1999 (1999-08-19) * page 3, line 29 - page 4, line 9 * * page 4, line 30 - page 5, line 14 * * page 5, line 27 - line 31 *	1-37	
			TECHNICAL FIELDS SEARCHED (Int.Cl.7) G06F A61B

The supplementary search report has been based on the last set of claims valid and available at the start of the search.

Place of search	Date of completion of the search	Examiner
MUNICH	30 January 2003	Sisk, A

CATEGORY OF CITED DOCUMENTS

X : particularly relevant if taken alone
Y : particularly relevant if combined with another document of the same category
A : technological background
O : non-written disclosure
P : intermediate document

T : theory or principle underlying the invention
E : earlier patent document, but published on, or after the filing date
D : document cited in the application
L : document cited for other reasons

& : member of the same patent family, corresponding document

EPO FORM 1503 03.82 (P04C04)

2

ANNEX TO THE EUROPEAN SEARCH REPORT ON EUROPEAN PATENT APPLICATION NO. EP 00 98 9280

This annex lists the patent family members relating to the patent documents cited in the above-mentioned European search report. The members are as contained in the European Patent Office EDP file on
The European Patent Office is in no way liable for these particulars which are merely given for the purpose of information.

30-01-2003

Patent document cited in search report	Publication date	Patent family member(s)	Publication date
WO 9824358 A	11-06-1998	AU 5461298 A	29-06-1998
		WO 9824358 A2	11-06-1998
		AU 8165498 A	04-01-1999
		WO 9859487 A1	30-12-1998
US 5772586 A	30-06-1998	FI 960636 A	13-08-1997
		AU 1726697 A	28-08-1997
		EP 0959755 A1	01-12-1999
		WO 9728736 A1	14-08-1997
		JP 2000504597 T	18-04-2000
WO 9941682 A	19-08-1999	AU 2762899 A	30-08-1999
		WO 9941682 A2	19-08-1999

EPO FORM P0459

For more details about this annex : see Official Journal of the European Patent Office, No. 12/82