EXHIBIT 8

PATENT
Customer Number 22,852
Attorney Docket No. 09140-0016-01000

IN THE UNITED STATES PATENT AND TRADEMARK OFFICE

Commissioner for Patents
P.O. Box 1450
Alexandria, VA 22313-1450

Prior Application Art Unit: 2823 Prior Application Examiner: Michelle ESTRADA

SIR: This is a request for filing a

☒ Continuation ☐ Continuation-in-Part ☐ Divisional Application under 37 C.F.R. § 1.53(b) of pending prior Application No. 10/101,863 filed March 16, 2002 of ZHANG et al. for BIASED PULSE DC REACTIVE SPUTTERING OF OXIDE FILMS

1. ☒ Enclosed is a complete copy of the prior application including the oath or Declaration and drawings, if any, as originally filed. I hereby verify that the attached papers are a true copy of prior Application No. 10/101,863 as originally filed on March 16, 2002, which is incorporated herein by reference.

2. ☐ Enclosed is a substitute specification under 37 C.F.R. § 1.125. The undersigned hereby verifies that no new matter is added in this substitute specification.

3. ☐ Enclosed is a Request for Non-Publication of Application and Certification Under 35 U.S.C. § 122(b)(2)(B)(i).

4. ☒ A Preliminary Amendment is enclosed.

5. ☒ The filing fee is calculated on the basis of the claims existing in the prior application as amended in the Preliminary Amendment filed herewith.

Basic Application Filing Fee					$790	$ 790.00
	Number of Claims		Basic	Extra Claims		
Total Claims	45	-	20	25	x $18	$ 450
Independent Claims	2	-	3	0	x $86	0
☐ Presentation of Multiple Dep. Claim(s)					+$290	0
Subtotal						$ 1240
Reduction by 1/2 if small entity						-
TOTAL APPLICATION FILING FEE						$ 1240

6. ☒ A check in the amount of $1280 to cover the filing fee of $1240 and Assignment recordation fee of $40 is enclosed.

7. ☒ The Commissioner is hereby authorized to charge any additional fees which may be required including fees due under 37 C.F.R. § 1.16 and any other fees due under 37 C.F.R. § 1.17, or credit any overpayment during the pendency of this application to Deposit Account No. 06-0916.

8. ☐ New acceptable drawings are enclosed.

9. ☒ The prior application is assigned of record to: Symmorphix, Inc.

10. ☐ Priority of Application No. [Text], filed on [Text] in [Country] is claimed under 35 U.S.C. § 119. A certified copy

☐ is enclosed or ☐ is on file in the prior application.

11. ☐ Small entity status is appropriate and applies to this application.

12. ☒ The power of attorney in the prior application is to FINNEGAN, HENDERSON, FARABOW, GARRETT & DUNNER, L.L.P., Customer No. 22,852

13. ☐ The power appears in the original declaration of the prior application.

14. ☒ Since the power does not appear in the original declaration, a copy of the power in the prior application is enclosed.

15. ☒ Please address all correspondence to FINNEGAN, HENDERSON, FARABOW, GARRETT and DUNNER, L.L.P., **Customer Number 22,852**.

16. ☒ Also enclosed is Information Disclosure Statement under 37 CFR 1.97(b) together with Form PTO 1449.

PETITION FOR EXTENSION. If any extension of time is necessary for the filing of this application, including any extension in parent Application No. 10/101,863, filed March 16, 2002, for the purpose of maintaining copendency between the parent application and this application, and such extension has not otherwise been requested, such an extension is hereby requested, and the Commissioner is authorized to charge necessary fees for such an extension to our Deposit Account No. 06-0916. A duplicate copy of this paper is enclosed for use in charging the deposit account.

FINNEGAN, HENDERSON, FARABOW,
GARRETT & DUNNER, L.L.P.

Dated: September 30, 2004

By: Gary J. Edwards
Reg. No. 41,008

PATENT
Customer Number 22,852
Attorney Docket No. 09140-0016-01000

IN THE UNITED STATES PATENT AND TRADEMARK OFFICE

Commissioner for Patents
P.O. Box 1450
Alexandria, VA 22313-1450

Prior Application Art Unit: 2823 Prior Application Examiner: Michelle ESTRADA

SIR: This is a request for filing a

☒ Continuation ☐ Continuation-in-Part ☐ Divisional Application under 37 C.F.R. § 1.53(b) of pending prior Application No. 10/101,863 filed March 16, 2002 of ZHANG et al. for BIASED PULSE DC REACTIVE SPUTTERING OF OXIDE FILMS

1. ☒ Enclosed is a complete copy of the prior application including the oath or Declaration and drawings, if any, as originally filed. I hereby verify that the attached papers are a true copy of prior Application No. 10/101,863 as originally filed on March 16, 2002, which is incorporated herein by reference.

2. ☐ Enclosed is a substitute specification under 37 C.F.R. § 1.125. The undersigned hereby verifies that no new matter is added in this substitute specification.

3. ☐ Enclosed is a Request for Non-Publication of Application and Certification Under 35 U.S.C. § 122(b)(2)(B)(i).

4. ☒ A Preliminary Amendment is enclosed.

5. ☒ The filing fee is calculated on the basis of the claims existing in the prior application as amended in the Preliminary Amendment filed herewith.

Basic Application Filing Fee					$790	$ 790.00
	Number of Claims		Basic	Extra Claims		
Total Claims	45	-	20	25	x $18	$ 450
Independent Claims	2	-	3	0	x $86	0
☐ Presentation of Multiple Dep. Claim(s)					+$290	0
Subtotal						$ 1240
Reduction by 1/2 if small entity						-
TOTAL APPLICATION FILING FEE						$ 1240

6. ☒ A check in the amount of $1280 to cover the filing fee of $1240 and Assignment recordation fee of $40 is enclosed.

7. ☒ The Commissioner is hereby authorized to charge any additional fees which may be required including fees due under 37 C.F.R. § 1.16 and any other fees due under 37 C.F.R. § 1.17, or credit any overpayment during the pendency of this application to Deposit Account No. 06-0916.

8. ☐ New acceptable drawings are enclosed.

9. ☒ The prior application is assigned of record to: Symmorphix, Inc.

10. ☐ Priority of Application No. [Text], filed on [Text] in [Country] is claimed under 35 U.S.C. § 119. A certified copy

☐ is enclosed or ☐ is on file in the prior application.

11. ☐ Small entity status is appropriate and applies to this application.

12. ☒ The power of attorney in the prior application is to FINNEGAN, HENDERSON, FARABOW, GARRETT & DUNNER, L.L.P., Customer No. 22,852

13. ☐ The power appears in the original declaration of the prior application.

14. ☒ Since the power does not appear in the original declaration, a copy of the power in the prior application is enclosed.

15. ☒ Please address all correspondence to FINNEGAN, HENDERSON, FARABOW, GARRETT and DUNNER, L.L.P., **Customer Number 22,852**.

16. ☒ Also enclosed is Information Disclosure Statement under 37 CFR 1.97(b) together with Form PTO 1449.

PETITION FOR EXTENSION. If any extension of time is necessary for the filing of this application, including any extension in parent Application No. 10/101,863, filed March 16, 2002, for the purpose of maintaining copendency between the parent application and this application, and such extension has not otherwise been requested, such an extension is hereby requested, and the Commissioner is authorized to charge necessary fees for such an extension to our Deposit Account No. 06-0916. A duplicate copy of this paper is enclosed for use in charging the deposit account.

FINNEGAN, HENDERSON, FARABOW,
GARRETT & DUNNER, L.L.P.

Dated: September 30, 2004

By: Gary J. Edwards
Reg. No. 41,008

M-12245 US
852923 v1

Express Mail Label No.
EL 941069152 US

Biased Pulse DC Reactive Sputtering of Oxide Films

Hongmei Zhang
Mukundan Narasimhan
Ravi Mullapudi
Richard E. Demaray

Background

1. Field of the Invention

[0001] The present invention relates to deposition of oxide and oxynitride films and, in particular, to deposition of oxide and oxynitride films by pulsed DC reactive sputtering.

2. Discussion of Related Art

[0002] Deposition of insulating materials and especially optical materials is technologically important in several areas including production of optical devices and production of semiconductor devices. In semiconductor devices, doped alumina silicates can be utilized as high dielectric insulators.

[0003] The increasing prevalence of fiber optic communications systems has created an unprecedented demand for devices for processing optical signals. Planar devices such as optical waveguides, couplers, splitters, and amplifiers, fabricated on planar substrates, like those commonly used for integrated circuits, and configured to receive and process signals from optical fibers are highly desirable. Such devices hold promise for integrated optical and electronic signal processing on a single semiconductor-like substance.

[0004] The basic design of planar optical waveguides and amplifiers is well known, as described, for example, in U. S. Patent Nos. 5,119,460 and 5,563,979 to Bruce et al., 5,613,995 to Bhandarkar et al., 5,900,057 to Buchal et al., and 5,107,538 to Benton et al., to cite only a few. These devices, very generally, include a core region, typically bar shaped, of a certain refractive index surrounded by a cladding region of a lower refractive index. In the case of an optical amplifier, the core region includes a certain concentration of a dopant, typically a rare earth ion

such as an erbium or praseodymium ion which, when pumped by a laser, fluoresces, for example, in the 1550 nm and 1300 nm wavelength ranges used for optical communication, to amplify the optical signal passing through the core.

[0005] As described, for example in the patents by Bruce et al., Bhandarkar et al, and Buchal et al., planar optical devices may be fabricated by process sequences including forming a layer of cladding material on a substrate; forming a layer of core material on the layer of cladding mater; patterning the core layer using a photolighotgraphic mask and an etching process to form a core ridge; and covering the core ridge with an upper cladding layer.

[0006] The performance of these planar optical devices depends sensitively on the value and uniformity of the refractive index of the core region and of the cladding region, and particularly on the difference in refractive index, Δn, between the regions. Particularly for passive devices such as waveguides, couplers, and splitters, Δn should be carefully controlled, for example to values within about 1 %, and the refractive index of both core and cladding need to be highly uniform, for some applications at the fewer than parts per thousand level. In the case of doped materials forming the core region of planar optical amplifiers, it is important that the dopant be uniformly distributed so as to avoid non-radiative quenching or radiative quenching, for example by upconversion. The refractive index and other desirable properties of the core and cladding regions, such as physical and chemical uniformity, low stress, and high density, depend, of course, on the choice of materials for the devices and on the processes by which they are fabricated.

[0007] Because of their optical properties, silica and refractory oxides such as Al_2O_3, are good candidate materials for planar optical devices. Further, these oxides serve as suitable hosts for rare earth dopants used in optical amplifiers. A common material choice is so-called low temperature glasses, doped with alkali metals, boron, or phosphorous, which have the advantage of requiring lower processing temperatures. In addition, dopants are used to modify the refractive index. Methods such as flame hydrolysis, ion exchange for introducing alkali ions in glasses, sputtering, and various chemical vapor deposition processes (CVD) have been used to form films of doped glasses. However, dopants such as phosphorous and boron are hygroscopic, and alkalis are undesirable for integration with electronic devices. Control of uniformity of doping in CVD processes can be difficult and CVD deposited films can have structural defects

leading to scattering losses when used to guide light. In addition, doped low temperature glasses may require further processing after deposition. A method for eliminating bubbles in thin films of sodium-boro-silicate glass by high temperature sintering is described, for example, in the '995 patent to Bhandarkar et al.

[0008] Typically, RF sputtering has been utilized for deposition of oxide dielectric films. However, RF sputtering utilizes ceramic targets which are typically formed of multiple smaller tiles. Since the tiles can not be made very large, there may be a large problem of arcing between tiles and therefore contamination of the deposited film due to this arcing. Further, the reactors required for RF sputtering tend to be rather complicated. In particular, the engineering of low capacitance efficient RF power distribution to the cathode is difficult in RF systems. Routing of low capacitance forward and return power into a vacuum vessel of the reaction chamber often exposes the power path in such a way that diffuse plasma discharge is allowed under some conditions of impedance tuning of the matching networks.

[0009] Therefore, there is a need for new methods of depositing oxide and oxynitride films and for forming planar optical devices.

Summary

[0010] In accordance with the present invention, a sputtering reactor apparatus for depositing oxide and oxynitride films is presented. Further, methods for depositing oxide and oxynitride films for optical waveguide devices are also presented. A sputtering reactor according to the present invention includes a pulsed DC power supply coupled through a filter to a target and a substrate electrode coupled to an RF power supply. A substrate mounted on the substrate electrode is therefore supplied with a bias from the RF power supply.

[0011] The target can be a metallic target made of a material to be deposited on the substrate. In some embodiments, the metallic target is formed from Al, Si and various rare-earth ions. A target with an erbium concentration, for example, can be utilized to deposit a film that can be formed into a waveguide optical amplifier.

[0012] A substrate can be any material and, in some embodiments, is a silicon wafer. In some

embodiments, RF power can be supplied to the wafer. In some embodiments, the wafer and the electrode can be separated by an insulating glass.

[0013] In some embodiments, up to about 10 kW of pulsed DC power at a frequency of between about 40 kHz and 350 kHz and a reverse pulse time of up to about 5 μs is supplied to the target. The wafer can be biased with up to about several hundred watts of RF power. The temperature of the substrate can be controlled to within about 10° C and can vary from about -50° C to several hundred degrees C. Process gasses can be fed into the reaction chamber of the reactor apparatus. In some embodiments, the process gasses can include combinations of Ar, N_2, O_2, C_2F_6, CO_2, CO and other process gasses.

[0014] Several material properties of the deposited layer can be modified by adjusting the composition of the target, the composition and flow rate of the process gasses, the power supplied to the target and the substrate, and the temperature of the substrate. For example, the index of refraction of the deposited layer depends on deposition parameters. Further, in some embodiments stress can be relieved on the substrate by depositing a thin film of material on a back side of the wafer. Films deposited according to the present invention can be utilized to form optical waveguide devices such as multiplexers and rare-earth doped amplifiers.

[0015] These and other embodiments, along with examples of material layers deposited according to the present invention, are further described below with respect to the following figures.

Brief Description of the Figures

[0016] Figures 1A and 1B show a pulsed DC sputtering reactor according to the present invention.

[0017] Figure 2 shows a planar view of target utilized in a reactor as shown in Figures 1A and 1B.

[0018] Figure 3 shows a cross-section view of an example target utilized in a reactor as shown in Figures 1A and 1B.

[0019] Figure 4 shows a flow chart of an embodiment of a process for depositing a film on a substrate according to the present invention.

[0020] Figure 5 shows a hysterises curve of target voltage versus oxygen flow rates for an example target in an embodiment of a reactor according to the present invention.

[0021] Figure 6 shows a photo-luminescence and lifetimes of a film deposited in a process according to the present invention as a function of after deposition anneal temperature.

[0022] Figure 7 shows the relationship between the index of refraction of a film as a function of deposited oxide layers according to the present invention and due to oxide build-up on the target.

[0023] Figure 8 shows a graph of the index of refraction of a film deposited according to the present invention as a function of the aluminum content in a composite Al/Si target.

[0024] Figure 9 shows a graph of typical indices of refraction of material layers deposited according to the present invention.

[0025] Figure 10 shows a table of indices of refraction for a silica layer deposited according to the present invention as a function of different process parameters.

[0026] Figure 11 shows the refractive indices as a function of O_2/Ar ratio utilized in an Alumina process according to the present invention.

[0027] Figure 12 shows the refractive indices as a function of DC pulsed power frequency for an Alumina layer deposited according to the present invention.

[0028] Figure 13 shows variation in the refractive index over time during repeated depositions from a single target.

[0029] Figure 14 shows variation in refractive index over time for repeated depositions from a target of another material layer according to the present invention.

[0030] Figure 15 shows the variation refractive index over time for repeated depositions from a target of another material layer according to the present invention.

[0031] Figure 16A through 16D shows a TEM film deposited according to the present invention.

[0032] Figure 17 shows the transparency of a film deposited according to the present invention.

[0033] Figure 18 shows an uppercladding layer deposited according to the present invention over a multiple-waveguide structure such that the deposited layer is substantially planarized.

[0034] Figure 19 illustrates the deposition of a film over a waveguide structure.

[0035] Figures 20 and 21 illustrate different etch and deposition rates for deposition of films as a function of the surface angle of the film.

[0036] Figure 22 illustrates calculation of the planarization time for a particular deposition process.

[0037] Figures 23 through 25 through illustrate adjustment of process parameters in order to achieve planarization of a film deposited over a waveguide structure according to the present invention.

[0038] Figure 26 shows the gain characteristics of an erbium doped waveguide amplifier formed of films depositions according to the present invention.

[0039] Figures 27 shows gain, insertion loss of a waveguide with an active core deposited according to the present invention.

[0040] Figure 28 shows up-conversion constants, and lifetimes of the active core layer of Figure 27 deposited according to the present invention.

[0041] Figure 29 shows drift in the index of refraction with subsequent depositions for films deposited from a target according to the present invention.

[0042] Figure 30 shows drift in the photoluminescence with subsequent depositions according to the present invention.

[0043] Figure 31 shows drift in the excited state lifetime with subsequent depositions according to the present invention.

[0044] Figure 32 shows stabilization of the index of refraction in subsequent depositions.

[0045] Figure 33 shows the index of refraction of a film formed from a pure silicon target as a

function of the ratio of O_2/N_2 in the process gas.

[0046] In the figures, elements having the same designation have the same or similar function.

Detailed Description

[0047] Reactive DC magnetron sputtering of nitrides and carbides is a widely practiced technique, but the reactive dc magnetron sputtering of nonconducting oxides is done rarely. Films such as aluminum oxide are almost impossible to deposit by conventional reactive DC magnetron sputtering due to rapid formation of insulating oxide layers on the target surface. The insulating surfaces charges up and result in arcing during process. This arcing can damage the power supply, produce particles and degrade the properties of deposited oxide films.

[0048] RF sputtering of oxide films is discussed in Application Serial No. 09/903,050 (the '050 application) by Demaray et al., entitled "Planar Optical Devices and Methods for Their Manufacture," assigned to the same assignee as is the present invention, herein incorporated by reference in its entirety. Further, targets that can be utilized in a reactor according to the present invention are discussed in U.S. Application serial no. {Attorney Docket No. M-12247 US} (the '247 application), filed concurrently with the present disclosure, assigned to the same assignee as is the present invention, herein incorporated by reference in its entirety. A gain-flattened amplifier formed of films deposited according to the present invention are described in U.S. Application serial no. {Attorney Docket No. M-12652 US} (the '652 application), filed concurrently with the present disclosure, assigned to the same assignee as is the present invention, herein incorporated by reference in its entirety. Further, a mode size converter formed with films deposited according to the present invention is described in U.S. Application serial no. {Attorney Docket No. M-12138 US} (the '138 application), filed concurrently with the present disclosure, assigned to the same assignee as is the present invention, herein incorporated by reference in its entirety.

[0049] Figure 1A shows a schematic of a reactor apparatus 10 for sputtering of material from a target 12 according to the present invention. In some embodiments, apparatus 10 may, for

example, be adapted from an AKT-1600 PVD (400 X 500 mm substrate size) system from Applied Komatsu or an AKT-4300 (600 X 720 mm substrate size) system from Applied Komatsu, Santa Clara, CA. The AKT-1600 reactor, for example, has three deposition chambers connected by a vacuum transport chamber. These Komatsu reactors can be modified such that pulsed DC power is supplied to the target and RF power is supplied to the substrate during deposition of a material film.

[0050] Apparatus 10 includes a target 12 which is electrically coupled through a filter 15 to a pulsed DC power supply 14. In some embodiments, target 12 is a wide area sputter source target, which provides material to be deposited on substrate 16. Substrate 16 is positioned parallel to and opposite target 12. Target 12 functions as a cathode when power is applied to it and is equivalently termed a cathode. Application of power to target 12 creates a plasma 53. Substrate 16 is capacitively coupled to an electrode 17 through an insulator 54. Electrode 17 can be coupled to an RF power supply 18. Magnet 20 is scanned across the top of target 12.

[0051] For pulsed reactive dc magnetron sputtering, as performed by apparatus 10, the polarity of the power supplied to target 12 by power supply 14 oscillates between negative and positive potentials. During the positive period, the insulating layer on the surface of target 12 is discharged and arcing is prevented. To obtain arc free deposition, the pulsing frequency exceeds a critical frequency that depend on target material, cathode current and reverse time. High quality oxide films can be made using reactive pulse DC magnetron sputtering in apparatus 10.

[0052] Pulsed DC power supply 14 can be any pulsed DC power supply, for example an AE Pinnacle plus 10K by Advanced Energy, Inc. With this example supply, up to 10 kW of pulsed DC power can be supplied at a frequency of between 0 and 350 KHz. The reverse voltage is 10% of the negative target voltage. Utilization of other power supplies will lead to different power characteristics, frequency characteristics and reverse voltage percentages. The reverse time on this embodiment of power supply 14 can be adjusted between 0 and 5 μs.

[0053] Filter 15 prevents the bias power from power supply 18 from coupling into pulsed DC power supply 14. In some embodiments, power supply 18 is a 2 MHz RF power supply, for example can be a Nova-25 power supply made by ENI, Colorado Springs, Co.

[0054] Therefore, filter 15 is a 2 MHz band rejection filter. In some embodiments, the band

width of the filter can be approximately 100 kHz. Filter 15, therefore, prevents the 2 MHz power from the bias to substrate 16 from damaging power supply 18.

[0055] However, both RF and pulsed DC deposited films are not fully dense and most likely have columnar structures. These columnar structures are detrimental for optical wave guide applications due to the scattering loss caused by the structure. By applying a RF bias on wafer 16 during deposition, the deposited film can be dandified by energetic ion bombardment and the columnar structure can be substantially eliminated.

[0056] In the AKT-1600 based system, for example, target 12 can have an active size of about 675.70 X 582.48 by 4 mm in order to deposit films on substrate 16 that have dimension about 400 X 500 mm. The temperature of substrate 16 can be held at between –50C and 500C. The distance between target 12 and substrate 16 can be between about 3 and about 9 cm. Process gas can be inserted into the chamber of apparatus 10 at a rate up to about 200 sccm while the pressure in the chamber of apparatus 10 can be held at between about .7 and 6 millitorr. Magnet 20 provides a magnetic field of strength between about 400 and about 600 Gauss directed in the plane of target 12 and is moved across target 12 at a rate of less than about 20-30 sec/scan. In some embodiments utilizing the AKT 1600 reactor, magnet 20 can be a race-track shaped magnet with dimension about 150 mm by 600 mm.

[0057] A top down view of magnet 20 and wide area target 12 is shown in Figure 2. A film deposited on a substrate positioned on carrier sheet 17 directly opposed to region 52 of target 12 has good thickness uniformity. Region 52 is the region shown in Figure 1B that is exposed to a uniform plasma condition. In some implementations, carrier 17 can be coextensive with region 52. Region 24 shown in Figure 2 indicates the area below which both physically and chemically uniform deposition can be achieved, where physical and chemical uniformity provide refractive index uniformity, for example. Figure 2 indicates that region 52 of target 12 that provides thickness uniformity is, in general, larger than region 24 of target 12 providing thickness and chemical uniformity. In optimized processes, however, regions 52 and 24 may be coextensive.

[0058] In some embodiments, magnet 20 extends beyond area 52 in one direction, the Y direction in Figure 2, so that scanning is necessary in only one direction, the X direction, to provide a time averaged uniform magnetic field. As shown in Figures 1A and 1B, magnet 20 can be scanned over the entire extent of target 12, which is larger than region 52 of uniform

sputter erosion. Magnet 20 is moved in a plane parallel to the plane of target 12.

[0059] The combination of a uniform target 12 with a target area 52 larger than the area of substrate 16 can provide films of highly uniform thickness. Further, the material properties of the film deposited can be highly uniform. The conditions of sputtering at the target surface, such as the uniformity of erosion, the average temperature of the plasma at the target surface and the equilibration of the target surface with the gas phase ambient of the process are uniform over a region which is greater than or equal to the region to be coated with a uniform film thickness. In addition, the region of uniform film thickness is greater than or equal to the region of the film which is to have highly uniform optical properties such as index of refraction, density, transmission or absorptivity.

[0060] Target 12 can be formed of any materials, but is typically metallic materials such as, for example, combinations of Al and Si. Therefore, in some embodiments, target 12 includes a metallic target material formed from intermetalic compounds of optical elements such as Si, Al, Er and Yb. Additionally, target 12 can be formed, for example, from materials such as La, Yt, Ag, Au, and Eu. To form optically active films on substrate 16, target 12 can include rare-earth ions. In some embodiments of target 12 with rare earth ions, the rare earth ions can be pre-alloyed with the metallic host components to form intermetalics. *See* the '247 application.

[0061] In several embodiments of the invention, material tiles are formed. These tiles can be mounted on a backing plate to form a target for apparatus 10. Figure 3A shows an embodiment of target 12 formed with individual tiles 30 mounted on a cooled backplate 25. In order to form a wide area target of an alloy target material, the consolidated material of individual tiles 30 should first be uniform to the grain size of the powder from which it is formed. It also should be formed into a structural material capable of forming and finishing to a tile shape having a surface roughness on the order of the powder size from which it is consolidated. A wide area sputter cathode target can be formed from a close packed array of smaller tiles. Target 12, therefore, may include any number of tiles 30, for example between 2 to 20 individual tiles 30. Tiles 30 are finished to a size so as to provide a margin of non-contact, tile to tile, 29 in Figure 3A, less than about 0.010" to about 0.020" or less than half a millimeter so as to eliminate plasma processes between adjacent ones of tiles 30. The distance between tiles 30 of target 12 and the dark space anode or ground shield 19, in Figure 1B can be somewhat larger so as to provide non contact assembly or provide for thermal expansion tolerance during process chamber conditioning or

operation.

[0062] Several useful examples of target 12 that can be utilized in apparatus 10 according to the present invention include the following targets compositions: (Si/Al/Er/Yb) being about (57.0/41.4/0.8/0.8), (48.9/49/1.6/0.5), (92/8/0/0), (60/40/0/0), (50/50/0/0), (65/35/0/0), (70/30/0,0), and (50,48.5/1.5/0) cat. %, to list only a few. These targets can be referred to as the 0.8/0.8 target, the 1.6/.5 target, the 92-8 target, the 60-40 target, the 50-50 target, the 65-35 target, the 70-30 target, and the 1.5/0 target, respectively. The 0.8/0.8, 1.6/0.5, and 1.5/0 targets can be made by pre-alloyed targets formed from an atomization and hot-isostatic pressing (HIPing) process as described in the '247 application. The remaining targets can be formed, for example, by HIPing. Targets formed from Si, Al, Er and Yb can have any composition. In some embodiments, the rare earth content can be up to 10 cat. % of the total ion content in the target. Rare earth ions are added to form active layers for amplification. Targets utilized in apparatus 10 can have any composition and can include ions other than Si, Al, Er and Yb, including: Zn, Ga, Ge, P, As, Sn, Sb, Pb, Ag, Au, and rare earths: Ce, Pr, Nd, Pm, Sm, Eu, Gd, Tb, Dy Ho, Er, Tm Yb and Lu.

[0063] Optically useful materials to be deposited onto substrate 16 include oxides, fluorides, sulfides, nitrides, phosphates, sulfates, and carbonates, as well as other wide band gap semiconductor materials. To achieve uniform deposition, target 12, itself can be chemically uniform and of uniform thickness over an extended area.

[0064] Target 12 can be a composite target fabricated from individual tiles, precisely bonded together on a backing plate with minimal separation, as is discussed further with respect to Figure 3. In some embodiments, the mixed intermetalllics can be plasma sprayed directly onto a backing plate to form target 12. The complete target assembly can also includes structures for cooling the target, embodiments of which have been described in U. S. Patent No. 5,565,071 to Demaray et al, and incorporated herein by reference.

[0065] Substrate 16 can be a solid, smooth surface. Typically, substrate 16 can be a silicon wafer or a silicon wafer coated with a layer of silicon oxide formed by a chemical vapor deposition process or by a thermal oxidation process. Alternatively, substrate 16 can be a glass, such as Corning 1737 (Corning Inc., Elmira, NY), a glass-like material, quartz, a metal, a metal oxide, or a plastic material. Substrate 16 can be supported on a holder or carrier sheet that may

be larger than substrate 16. Substrate 16 can be electrically biased by power supply 18.

[0066] In some embodiments, the area of wide area target 12 can be greater than the area on the carrier sheet on which physically and chemically uniform deposition is accomplished. Secondly, in some embodiments a central region on target 12, overlying substrate 16, can be provided with a very uniform condition of sputter erosion of the target material. Uniform target erosion is a consequence of a uniform plasma condition. In the following discussion, all mention of uniform condition of target erosion is taken to be equivalent to uniform plasma condition. Uniform target erosion is evidenced by the persistence of film uniformity throughout an extended target life. A uniformly deposited film can be defined as a film having a nonuniformity in thickness, when measured at representative points on the entire surface of a substrate wafer, of less than about 5 % or 10%. Thickness nonuniformity is defined, by convention, as the difference between the minimum and maximum thickness divided by twice the average thickness. If films deposited from a target from which more than about 20 % of the weight of the target has been removed continue to exhibit thickness uniformity, then the sputtering process is judged to be in a condition of uniform target erosion for all films deposited during the target life.

[0067] As shown in Figure 1B, a uniform plasma condition can be created in the region between target 12 and substrate 16 in a region overlying substrate 16. A plasma 53 can be created in region 51, which extends under the entire target 12. A central region 52 of target 12, can experience a condition of uniform sputter erosion. As discussed further below, a layer deposited on a substrate placed anywhere below central region 52 can then be uniform in thickness and other properties (i.e., dielectric, optical index, or material concentrations).

[0068] In addition, region 52 in which deposition provides uniformity of deposited film can be larger than the area in which the deposition provides a film with uniform physical or optical properties such as chemical composition or index of refraction. In some embodiments, target 12 is substantially planar in order to provide uniformity in the film deposited on substrate 16. In practice, planarity of target 12 can mean that all portions of the target surface in region 52 are within a few millimeters of a planar surface, and can be typically within 0.5 mm of a planar surface.

[0069] Other approaches to providing a uniform condition of sputter erosion rely on creating a large uniform magnetic field or a scanning magnetic field that produces a time-averaged,

uniform magnetic field. For example, rotating magnets or electromagnets can be utilized to provide wide areas of substantially uniform target erosion. For magnetically enhanced sputter deposition, a scanning magnet magnetron source can be used to provide a uniform, wide area condition of target erosion.

[0070] As illustrated in FIG. 1A, apparatus 10 can include a scanning magnet magnetron source 20 positioned above target 12. An embodiment of a scanning magnetron source used for dc sputtering of metallic films is described in U. S. Patent No. 5,855,744 to Halsey, et. al., (hereafter '744), which is incorporated herein by reference in its entirety. The '744 patent demonstrates the improvement in thickness uniformity that is achieved by reducing local target erosion due to magnetic effects in the sputtering of a wide area rectangular target. As described in the '744 patent, by reducing the magnetic field intensity at these positions, the local target erosion was decreased and the resulting film thickness nonuniformity was improved from 8%, to 4%, over a rectangular substrate of 400 x 500 mm.

[0071] The process gas utilized in reactor 10 includes an inert gas, typically argon, used as the background sputtering gas. Additionally, with some embodiments of target 12, reactive components such as, for example, oxygen may be added to the sputtering gas. Other gasses such as N_2, NH_3, CO, NO, CO_2, halide containing gasses other gas-phase reactants can also be utilized. The deposition chamber can be operated at low pressure, often between about .5 millitorr and 8-10 millitorr. Typical process pressure is below about 3-5millitorr where there are very few collisions in the gas phase, resulting in a condition of uniform "free molecular" flow. This ensures that the gas phase concentration of a gaseous component is uniform throughout the process chamber. For example, background gas flow rates in the range of up to about 200 sccm, used with a pump operated at a fixed pumping speed of about 50 liters/second, result in free molecular flow conditions.

[0072] The distance d, in Figure 1A, between target 12 and substrate 16 can, in some embodiments, be varied between about 4 cm and about 9 cm. A typical target to substrate distance d is about 6 cm. The target to substrate distance can be chosen to optimize the thickness uniformity of the film. At large source to substrate distances the film thickness distribution is dome shaped with the thickest region of the film at the center of the substrate. At close source to substrate distance the film thickness is dish shaped with the thickest film formed at the edge of the substrate. The substrate temperature can be held constant in the range of about -40 °C to

about 550°C and can be maintained at a chosen temperature to within about 10 °C by means of preheating substrate 16 and the substrate holder prior to deposition. During the course of deposition, the heat energy impressed upon the substrate by the process can be conducted away from substrate 16 by cooling the table on which substrate 16 is positioned during the process, as known to those skilled in the art. The process is performed under conditions of uniform gas introduction, uniform pumping speed, and uniform application of power to the periphery of the target as known to skilled practitioners.

[0073] The speed at which a scanning magnet 20 can be swept over the entire target can be determined such that a layer thickness less than about 5 to 10 Å, corresponding roughly to two to four monolayers of material, is deposited on each scan. Magnet 20 can be moved at rates up to about 30 sec/one-way scan and typically is moved at a rate of about 4 sec/one-way scan. The rate at which material is deposited depends on the applied power and on the distance d, in Figure 1A, between the target 12 and the substrate 16. For deposition of optical oxide materials, for example scanning speeds between about 2 sec/one-way scan across the target to 20-30 sec/scan provide a beneficial layer thickness. Limiting the amount of material deposited in each pass promotes chemical and physical uniformity of the deposited layer.

[0074] Substrate bias has been used previously to planarize RF sputtered deposited quartz films. A theoretical model of the mechanism by which substrate bias operates, has been put forward by Ting et al. (J. Vac. Sci. Technol. 15, 1105 (1978)). When power is applied to the substrate, a so-called plasma sheath is formed about the substrate and ions are coupled from the plasma. The sheath serves to accelerate ions from the plasma so that they bombard the film as it is deposited, sputtering the film, and forward scattering surface atoms, densifying the film and eliminating columnar structure. The effects of adding substrate bias are akin to, but more dramatic than, the effects of adding the low frequency RF component to the sputter source.

[0075] Biasing substrate 16 results in the deposited film being simultaneously deposited and etched. The net accumulation of film at any point on a surface depends on the relative rates of deposition and etching, which depend respectively, on the power applied to the target and to the substrate, and to the angle that the surface makes with the horizontal. The rate of etching is greatest for intermediate angles, on the order of 45 degrees, that is between about 30 and 60 degrees.

[0076] Powers to target 12 and substrate 16 can be adjusted such that the rates of deposition and etching are approximately the same for a range of intermediate angles. In this case, films deposited with bias sputtering have the following characteristics. At a step where a horizontal surface meets a vertical surface, the deposited film makes an intermediate angle with the horizontal. On a surface at an intermediate angle, there will be no net deposition since the deposition rate and etch rate are approximately equal. There is net deposition on a vertical surface.

[0077] Target 12 can have an active size of about 675.70 X 582.48 by 4 mm, for example, in a AKT-1600 based system in order to deposit films on a substrate 16 that is about 400 X 500 mm. The temperature of substrate 16 can be held at between –50C and 500C. The distance between target 12 and substrate 16 can be between 3 and 9 cm. Process gas can be inserted into the chamber of apparatus 10 at a rate of between about 30 to about 100 sccm while the pressure in the chamber of apparatus 10 can be held at below about 2 millitorr. Magnet 20 provides a magnetic field of strength between about 400 and about 600 Gauss directed in the plane of target 12 and is moved across target 12 at a rate of less than about 20-30 sec/scan.

[0078] Therefore, any given process utilizing apparatus 10 can be characterized by providing the power supplied to target 12, the power supplied to substrate 16, the temperature of substrate 16, the characteristics and constituents of the reactive gasses, the speed of the magnet, and the spacing between substrate 16 and target 12.

[0079] Sputtered oxide films according to some embodiments of the present invention can be deposited onto a Si wafer or thermal oxide wafers at pressure of between about 3 and about 6 mTorr. The ratio of O_2/Ar gas flow can be set at a value to ensure that target 12 is operating within a poison mode. The poison mode is defined as the ratio where the oxide is etched from the surface of target 12 as fast as the oxide layer is formed. Operating in the poison mode results in the stoichiometric film. Sub-stoichiometric oxides may not be optically transparent. The pulsing frequency range for power supply 14 can be from about up to about 250 KHz. The frequency 40 KHz is approximately the lowest frequency at which no arcing will occur during deposition in, for example, the AKT 1600 based system. The reverse pulsing time is determined by the amount of arcing generated during the process. Longer reverse time means longer discharge time and thus less arcs. However, if the reverse time is too long, the deposition rate will decrease. Power supply 18 is a 2 MHz RF power supply operated at powers up to several

hundred Watts.

[0080] Figure 4 shows an embodiment of a process procedure 400 performed on apparatus 10. In step 401, the target is prepared for the deposition. In some embodiments, target 12 can be cleaned by pure Ar sputtering. In other words, apparatus 10 is operated with pure Ar gas only (referred to as the metal mode) in order to sputter away a surface layer of target 12.

[0081] Figure 7 shows the typical drift in the index of refraction with deposition of oxide layers for several different targets over different runs for each target. In Figure 7, the compositions of the target materials utilized in target 12 for the depositions shown are as follows: Si: 60 cat. % and Al: 40 cat. %; Si: 50 cat. % and Al: 50 cat. %; Si: 85 cat. % and Al: 15 cat. %; Si: 35 cat. % and Al: 65 cat. %; and Si: 92 cat. % and 8 cat. %. Each deposition was operated under the same process parameters: 4.5 kW of pulsed DC power at 200 kHz with a reverse time of 2.3 μs applied to target 12, O_2 flow at 44 sccm, Ar flow at 30 sccm introduced to apparatus 10, 100 W of bias power at 2 MHz applied to substrate 16, the temperature of substrate 16 held at 200° C, and the distance between substrate 16 and target 12 being set at 6 cm. For each target measured, the index drifted up during repeated utilization.

[0082] Figure 8 shows the relationship between the index of refraction of a film deposited according to the present invention and the amount of aluminum in the composite target. As can be seen from Figure 8, the index of refraction of the deposited film depends strongly on the aluminum content. Therefore, as the aluminum in a metal target is depleted, the index of refraction drifts. In some embodiments, the ratio of Ar and O_2 utilized in the process can be maintained to provide films of uniform index over a large number of depositions on the target.

[0083] Reactive sputtering from a metal or metallic alloy target 12 can be characterized by two modes of operation. In the first mode, which is sometimes referred to as the 'metallic mode' the surface of target 12 is substantially metallic. This mode is characterized by a small addition of reactive gas to the inert gas flow of apparatus 10 as well as a higher impedance magnetron discharge. It is also characterized by incomplete oxidation of film deposited on substrate 16 and therefore higher index films. As the proportion of reactive to inert gas is increased, the sputter voltage at target 12 begins to fall at constant power.

[0084] Figure 5 shows the voltage on target 12 of an embodiment of apparatus 10 according to

the present invention as a function of process gas constitution. In the example illustrated in Figure 5, for example, a metallic target with composition .8 cat. % Er, .8 cat. % Yb, 57.4 cat. % Si and 41 cat. % Si, which can be formed as described in the '247 application, was sputtered in an embodiment of apparatus 10 based on the AKT-1600 PVD system with 6 kW of pulsed DC power at a frequency of 120 kHz and a reverse time of 2.3 micro seconds. The Argon gas flow was set at 60 sccm and the Oxygen gas flow was varied from zero up to 40 sccm. For more details regarding this deposition, see Example 1 below.

[0085] As shown in Figure 5, the voltage on target 12 during deposition (the "target voltage") was constant at about 420 Volts for oxygen flow rates up to about 20 sccm. This is clearly the metallic mode of operation for this embodiment of target 12. Films deposited in this range of oxygen flow are characterized as metallic with an oxygen content that increases with oxygen flow rate during deposition. As the oxygen flow is increased up to about 26 sccm, the voltage on target 12 begins to decrease, indicating that the surface of target 12 is beginning to form an oxide layer. The oxide layer on the surface of target 12 has a higher secondary electron yield under the influence of the Argon ion flux. The additional electron flux to the magnetron electron trap increases the ion production in the plasma, which, in turn, decreases the impedance of the plasma discharge in apparatus 10.

[0086] At slightly higher oxygen flow during deposition, the oxide layer on target 12 forms a continuous layer and the voltage of target 12 during deposition falls rapidly to the range of about 190 to about 270 Volts, indicating complete coverage of the surface of target 12 with an oxide that is at least as thick as the material removed during one scan of the magnetron. Under this condition, the rate of oxide formation on the surface of target 12 equals or exceeds the rate of sputter removal of the surface of target 12 by the moving magnetron 20. This condition is sometimes referred to as the 'poisoned mode'.

[0087] Under steady state DC voltage conditions, the oxide layer on target 12 soon charges up, leading to reduced rate of sputtering and increased micro-arc discharging in apparatus 10. This discharging leads to particulation of the oxide layer on target 12, which degrades the quality of a film deposited on substrate 16. In the example shown with Figure 5, the negative going DC Voltage is reduced at a frequency of 120 kHz to a positive value for a period of about 2.3 micro seconds per cycle, allowing charge neutralization of the surface of target 12, increasing the steady state sputter and deposition rates as well as decreasing the rate of micro-arcing.

[0088] In the case of a magnetron configuration of magnet 20 having a significant deep local target erosion (rather than a configuration of magnet 20 described above which yields uniform target erosion), the change in the target voltage of target 12 is more gradual with increasing oxygen flow since it is more difficult to establish an oxide condition at the center of an intense region of local erosion. The resulting deposited film, however, will be rich in metallic sputtered flux to the substrate in the region of higher sputter erosion, leading to non uniform stoicheometry and non-uniform indices of refraction in a film deposited on substrate 16. In the case of a scanning magnetron 20 with uniform target erosion, the change in the surface condition from metallic to poisoned is more abrupt, as the formation rate of the oxide increases to equal the sputter removal of the oxide over a wide area of the target. In this case, there is uniform distribution of sputtered oxide from the target. Uniform stoicheometry and uniform indices of refraction result for the film deposited on substrate 16.

[0089] Figure 8 shows the range of indices of refraction of films deposited for targets of differing silica and alumina compositions, as deposited and after a subsequent anneal step. In the case of a pure silicon target, the as-deposited index of refraction can be as high as 3.4 for pure amorphous silicon. In Figure 8, pure silica films (zero Al%) can be deposited with a reactive pulsed DC and substrate bias deposition according to the present invention with substantially complete oxygen stoicheometry, so as to approximate monolithic amorphous silica. The index of refraction of such films decreases with a subsequent heat treatment of between about 700-900° C, indicating somewhat more complete oxidation reaction of the material of the film together with some degree of stress relaxation of the film deposited on substrate 16.

[0090] At the opposite extreme, a pure aluminum embodiment of target 12 (100% Al) can be utilized to deposit films on substrate 16 under similar process conditions as is utilized to deposit pure silica films on substrate 16. In the case of the pure aluminum reactive deposition, the dependence of the index of refraction of the film deposited on substrate 16 on oxygen flow as well as on the frequency of the pulsed DC process can be examined. As a result, a larger range of effective index of refraction is achieved together with a reduced or zero dependence of the index on the subsequent anneal process. Six targets having differing aluminum composition were utilized to evaluate the index of refraction of sputtered films on substrate 16 of related composition. The largest change of index with the sputtering conditions is achieved for composition near the middle of the Al/Si composition range (about 50% Al and 50% Si).

[0091] Figure 7 shows the change in film index for oxide films for several embodiments of target 12 and processes with an initial 30 minutes of Argon only sputtering, followed by continuous deposition with an oxygen flow rate sufficient for operation in the poisonous mode. Note that the rate of increase in the index of refraction of a resulting film deposited on substrate 16 with continuous poisoned mode deposition is proportional to the concentration of aluminum in the composition of target 12. This result is due to the depletion of the aluminum from the target surface during the metallic sputtering or pre-condition process. The aluminum in target 12 is preferentially sputtered over the silicon in target 12, leaving the surface of target 12 rich in silicon. At the onset of poisoned mode sputtering, the film deposited on substrate 16 is rich in silica and demonstrates a systematic and reproducible decrease in index of refraction. During continuous poisoned mode deposition, the silicon rich surface of target 12 can be sputtered away and the aluminum portion substantially returned to the bulk composition of target 12. Consequently, a metallic pre-condition step can be utilized to achieve a subsequent process for the deposition of a film having an increasing index of refraction under conditions of oxide/metal stoicheometry.

[0092] In step 402 of Figure 4, substrate 16 is prepared. Substrate 16 can be mounted on carrier sheet 17 and placed in apparatus 10. In step 403, gas flow parameters are adjusted for the particular deposition to be performed. The constituency and flow rates of the process gas are fixed. In some embodiments, the ratio of Ar and O_2, for example, can be set and the flow rate of each gas set. Further, the combination of flow rate and vacuum system of apparatus 10 determines the pressure during deposition in apparatus 10.

[0093] In step 404, the substrate temperature is set. Substrate 16 may be brought to temperature over a period of time. In step 405, the scan characteristics of magnet 20 are fixed. In step 406, the power setting for power supply 18 is set. Finally, in step 407, the parameters of pulsed DC power supply 14 is set, including the power, frequency, and reverse pulsing time. In step 408, then, a film that depends on the parameters of reactor apparatus 10 is deposited on substrate 16. In some embodiments, films deposited by procedure 400 are thermally annealed after deposition.

[0094] Figure 4 illustrates an example deposition process only. Embodiments of deposition processes according to the present invention can be performed in various different orders.

[0095] Figure 9 shows a chart of various deposition parameters according to the present invention for various embodiments of target 12 and the indices of refraction, both before and after an anneal step, for the resulting deposited film on substrate 16. Each deposition was accomplished with an embodiment of apparatus 10 based on the AKT 1600 PVD reactor. Anneals were accomplished at 725° C for 30 min. Specific examples of particular depositions and characteristics of the resulting films deposited on substrate 16 are further discussed below.

[0096] Figure 10 shows the dependence of the index of refraction of silica layers deposited according to the present invention with process conditions. Figure 11 shows the dependence of index of refraction on the O2/Ar flow ratio for the deposition of pure alumina according to the present invention. Figure 12 shows the dependence of index for pure alumina films on the frequency of the pulsed DC power applied to target 12. Both parameters can be utilized to reliably control the index of refraction of films deposited on substrate 16 over a range of index values without the use of an additional cationic species, a so called 'dopant'. A third process parameter that can be utilized to adjust the index of refraction of a film deposited on substrate 16 is the bias power applied to substrate 16. Increasing the oxygen flow ratio, the frequency of the pulsed DC power applied to target 12 or the bias power applied to substrate 16 will systematically increase the index of refraction of the alumina film deposited on substrate 16. In the case of pure alumina films, minor to no change in the index occurs due to a subsequent anneal process.

[0097] Figure 13 shows the index of refraction of a film deposited on substrate 16 from an embodiment of target 12 with about 92 cat. % of Si and about 8 cat. % of Al for a series of sequential depositions in an embodiment of apparatus 10 based on the AKT 4300 PVD reactor, each following a metallic process condition. For constant high oxygen flow conditions, a small upward trend in the index of refraction is observed. As is generally true, the index of films deposited with higher substrate bias power is systematically lower than films deposited without substrate bias.

[0098] Figure 14 shows the upward trend of the index of refraction after metallic mode precondition of an embodiment of target 12 having composition of about 83 cat. % Si and about 17 cat. % Al for a series of depositions in an embodiment of apparatus 10 based on the AKT 1600 PVD reaction. As is shown in Figure 14, longer metallic preconditioning of target 12 results in the index of refraction of the films deposited on substrate 16 having a higher rate of

increase than for cases with less prolonged metallic preconditioning of target 12. The vertical lines on Figure 14 indicate places where target 12 was preconditioned with only Ar for the indicated periods of time. Figure 15 shows a decrease in the change in index for sequential films with this embodiment of target 12 deposited with reduced oxygen flow rates at a constant total pressure. A flow rate for oxygen was determined so that the run to run variation for the index of refraction of the film deposited on substrate 16 from this target was about .0001 (see the circled data points on the graph of Figure 15) which is similar to the variance of the index over the entire wafer of substrate 16, which is about 70 parts per million.

[0099] In some embodiments, films deposited by a pulsed DC biased method according to the present invention are uniformly amorphous throughout their thickness. As has been discussed above, biasing of substrate 16 leads to densification and uniformity in the deposited film. Figures 16A through 16D show a TEM photograph of a film 1601 deposited according to the present invention. Further, diffraction patterns shown in Figures 16B, 16C and 16D at points a, b and c, respectively, in deposited film 1601 show that the film is ammorphous through the thickness of the film. The diffraction patterns of Figures 16B, 16C and 16D show no effects of crystallization. Further, the smoothness of the surface of film 1601 indicates a defect free film. The film deposited in Figure 16A is deposited with an 0.8/0.8 target (i.e., a target having the composition 52.0 cat. % of Si, 41.0 cat. % of Al, 0.8 cat. % of Er and 0.8 cat. % of Yb). The film is deposited at 6 kW of 120 kHz pulsed DC power with a reverse time of 2.3 μs. The Argon and Oxygen flow rates are 60 sccm and 28 sccm, respectively. Substrate 16 is biased with 100 W of power.

[0100] Figure 17 shows the optical loss per centimeter, measured at 1310 nm, using a three prism coupling to the so called slab mode of the film on a 10 micron oxide, silicon wafer. As deposited the biased, pulsed DC film from a 60 cat. % Si and 40 cat. %Al film demonstrated about .1dB/cm loss. After an 800° C anneal in air, the loss was less than the measurement sensitivity of the prism coupling method. This data clearly demonstrates that films deposited according to embodiments of the present invention can be used for the purpose of constructing low loss planar light wave circuits.

[0101] Deposition of films according to the present invention can be utilized to deposit cladding layers, active core layers, and passive core layers of an optical amplifier structure or optical

waveguide structure. In some applications, for example multiplexer structures, the separation between adjacent waveguides can be small, for example about 8 μm. In some embodiments, the deposition parameters of the upper cladding layer can be adjusted to not only adjust the index of refraction of the layer, but also to insure that the spacing between adjacent waveguides is small.

[0102] Figure 18 shows an example planarization deposition over a multiplexer structure. In the particular example of upper cladding layer 1803 shown in Figure 18, the deposition parameters from a 92 cat. % Si and 8 cat. % Al is: 5.5 Kw of Pulsed DC power applied at 200 KHz with 2.2 μs of reverse time, gas flow of 75 sccm Ar and 100 sccm O_2, a substrate bias of 650 W (at 2 MHz), and a substrate temperature of 200 °C. Layer 1803 was deposited with an AKT 4300 based embodiment of apparatus 10. As shown in Figure 18, the layer thickness in areas other than over waveguide structures 1801 and 1802 is 11.4 μm. Waveguide structures 1801 and 1802 are 8.20 μm high waveguides and separated by 6.09 μm at the base and by 8.40 μm at their top. In Figure 18, the undercladding layer 1804 is about 1.98 μm thick.

[0103] Figure 19 illustrates deposition of material over a structure. Upper cladding layer 1803, in region 1901, will be angled from the horizontal by an angle θ. The deposition and etching rates of a deposited layer depends on the angle θ. Figures 20 and 21 illustrate different cases of deposition and etch rates as a function of the angle θ. The relationship between the rate of deposition and the etch rates can be adjusted by adjusting the deposition parameters. For example, the bias power to substrate 16 can be adjusted to control the relationship between the etch rates and deposition rates of material.

[0104] Figure 22 illustrates deposition rates over a structure 2201 as a function of time. In Figure 2201, h is the thickness deposited over structure 2201. The planarization when layer 1803 becomes flat.

[0105] The time for planarization can be estimated as

$$t_p = \frac{\frac{W}{2}\tan\alpha + H}{a_{flat} - \frac{a_{\min}}{\cos\alpha}},$$

where W is the width of structure 2201, H is the height of structure 2201, a_{flat} refers to the

accumulation rate on the flat surface, a_{min} refers to the accumulation rate on the minimum accumulation slope, and α is the surface angle from the horizontal plane of the minimum accumulation slope.

[0106] Figure 23 shows a deposited film 1803 as shown in Figure 18, except that the bias power to substrate 16 is set to 400 W instead of 650 W. As can be seen in Figure 23, a keyhole 2301 is formed with an incomplete filling of uppercladding layer 1803 between structures 1801 and 1802. Deposition of uppercladding layer 1803 substantially follows the trends illustrated in Figures 19 through 22.

[0107] Figure 24 shows deposition as shown in Figure 18, except that the bias power to substrate 16 is set to 600 W instead of 650 W. As can be seen in Figure 24, keyhole 2301 has closed leaving a small line defect 2401 in the fill.

[0108] Figure 28 shows deposition as shown in Figure 18, except that the bias power to substrate 16 is set to 900 W instead of 650 W. As can be seen in Figure 28, the etch rate has been increased to such an extent that the corners of structures 1801 and 1802 have been etched to form slopes 2501 and 2502, respectively.

[0109] Therefore, as illustrated in figures 18 through 25, an uppercladding layer can be deposited in accordance with the present invention such that it fills the space between adjacently placed waveguides. In general, the parameters can be optimized for index control and the bias power to substrate 16 can be adjusted for fill. In some embodiments, other parameters (e.g., the constituency of process gas, frequency and power of pulsed DC power source 14, and other parameters) in order to adjust the deposition and etch rates and thereby effectively planarize the structure as described.

[0110] Therefore, depositions of various films in embodiments of apparatus 10 according to the present invention with several embodiments of target 12 and the effects on index of refraction, uniformity of films, and fill characteristics of varying several of the process parameters has been discussed above. In some embodiments, stress effects due to wafer bowing of substrate 16 can also be reduced. Wafer bowing of substrate 16 can be reduced, reducing the stress in a film deposited on substrate 16, by, for example, depositing a film on the backside of substrate 16 before deposition of a film on substrate 16. In some embodiments, a film having a similar

thickness of a similar layer of material can be deposited on backside of substrate 16 prior to deposition of the film on substrate 16 according to the present invention. The wafer bowing resulting from differing thermal expansions of the film and substrate 16 is therefore countered by a similar stress from another film deposited on the backside of substrate 16.

[0111] Several specific examples film depositions utilizing apparatus 10 are discussed below. Further, examples of optical amplifiers produced utilizing the ceramic tiles according to the present invention are presented. These examples are provided for illustrative purposes only and are not intended to be limiting. Unless otherwise specified, apparatus 10 utilized in the following examples was based on the AKT 1600 reactor. Further, unless otherwise specified, the temperature of substrate 16 was held at about 200° C and the distance between substrate 16 and target 12 was 4 s/scan. The separation between substrate 16 and target 12 is about 6 cm.

EXAMPLE 1

[0112] An AKT 1600 based reactor can be utilized to deposit a film. In this example, a wide area metallic target of dimension 550X 650 mm with composition (Si/Al/Er/Yb) being about 57.0 cat. % Si, 41.4 cat. % Al, 0.8 cat. % Er, and 0.8 cat. % Yb (a ".8/.8" target) was fabricated as described in the '247 patent.

[0113] In step 402, a 150 mm P-type silicon wafer substrate was placed in the center of a 400x500 mm glass carrier sheet 17. Power supply 14 was set to supply 6000 watts of pulse DC power at a frequency of 120KHz with a reverse pulsing time of about 2.3us. Magnet 20, which is a race-track shaped magnet of approximate dimension 150mmx600mm, was swept over the backside of the target at a rate of about 4 seconds per one-way scan. The temperature of substrate 16 was held at 200C and 100W of 2 MHz RF power was applied to substrate 16. The target 12 to substrate 16 distance was about 6.5 cm. The sputtering gas was a mixture of Argon and Oxygen. Substrate 16 and carrier 17 was preheated to 350° C for at least 30min prior to deposition. The active film was deposited in the poison mode. Deposition efficiency was approximately 1um/hr.

[0114] Figure 5 shows the hysteresis curve of this particular embodiment of target 12. When target 12 under goes the transition from metallic to poison mode, the target voltage drops from

an average of about 420V to an average of about 260V. Before each film deposition, in step 401, target 12 is cleaned by pure Argon sputtering in the metallic mode. Then target is then conditioned in poison mode with the oxygen flow much higher than the flow required at the transition region.

[0115] Tables 1A through 1C shows some effects on the deposited films of depositions with the 0.8/0.8 target under different operating conditions. Table 1A includes photoluminescence (pumped at 532 nm) and index of refraction for films deposited on substrate 16 with different Ar/O_2 gas flow ratios with no bias power applied to substrate 16.

Table 1A

Target Power (KW)	Ar/O2	Frequency (KHz)	Reverse Pulsing Time (us)	Bias (W)	PL/um (532nm)	Index
6	30/42	200	2.3	0	1973	1.5142
6	30/36	200	2.3	0	2358	1.5215
6	60/30	200	2.3	0	3157	1.5229
6	60/28	200	2.3	0	3421	1.5229

[0116] Table 1B shows the variation in photoluminescence (pumped at 532 nm) and index of refraction of the film deposited on substrate 16 with deposition processes having with the same Ar/O_2 ratios but different pulsed DC power frequencies from power supply 14.

Table 1B

Target Power (KW)	Ar/O2	Frequency (KHz)	Reverse Pulsing Time (us)	Bias (W)	PL/um (532nm)	Index
3	60/28	100	2.3	100	1472	1.5146
4	60/28	75	3.5	100	2340	1.5189
6	60/28	120	2.3	100	5178	1.5220

[0117] Table 1C shows the photoluinescence and index as deposited where the bias power to substrate 16 is varied.

Table 1C

Target Power (KW)	Ar/O2	Frequency (KHz)	Reverse Pulsing Time (us)	Bias (W)	PL/um (532nm)	Index
6	60/28	200	2.3	0	3657	1.5230
6	60/28	200	2.3	100	2187	1.5244
6	60/28	200	2.3	200	3952	1.5229
6	60/28	200	2.3	300	5000	1.5280

[0118] The photoluminescence values can be measured with a Phillips PL-100. The deposited film can be pumped with a 532 nm laser and the luminescence at 980 is measured. The index is the index of refraction. Typically, films deposited are annealed in order to activate the erbium. Figure 6 shows the photoluminescence and lifetime versus anneal temperature for a typical film deposited as described in this example.

EXAMPLE 2

[0119] A waveguide amplifier can be deposited according to the present invention. An embodiment of target 12 having composition 57.4 cat. % Si, 41.0 cat. % Al, 0.8 cat. % Er 0.8 cat. % Yb (the ".8/.8 target") can be formed as disclosed in the '245 application. The Er-Yb (0.8/0.8) co-doped Alumino-Silicate film was deposited onto a 6 inch wafer of substrate 16 which includes a 10 μm thick thermal oxide substrate, which can be purchased from companies such as Silicon Quest International, Santa Clara, CA. Target 12 was first cleaned by sputtering with Ar (80 sccm) only in the metallic mode. Target 12 was then conditioned in poison mode by flowing 60 sccm of Argon and 40 sccm of oxygen respectively. The power supplied to target 12 during conditioning was kept at about 6 kW.

[0120] An active core film was then deposited on substrate 16. The thickness of the deposited film is approximately 1.2 μm. The deposition parameters are shown in Table 2.

Table 2.

. Target Power (KW)	Ar/O2 (sccm)	Pulsing Frequency (KHz)	Bias (W)	Reverse pulsing time (us)
6	60/28	120	100	2.3

[0121] A straight waveguide pattern can then formed by standard photolithography techniques. The active core was etched using reactive ion etch followed by striping and cleaning. Next, a 10 µm top cladding layer is deposited using a similar deposition process according to the present invention. An embodiment of target 12 with composition 92 cat. % Si and 8 cat. % Al as shown in Figure 9 to form the top cladding layer. The index difference between the top cladding layer and the active layer is about 3.7%. The amplifier is then annealed at 725° C for about 30 min (see Figure 6, for example).

[0122] The erbium excited-state lifetime and the up-conversion coefficient were measured to be 3ms and 4.5 x 10^{-18} cm^3/s, respectively. A net gain of about 4dB for small signal (about –20 dBm) with fiber to waveguide and to fiber coupling was obtained. Waveguide length was 10cm and the width was about 1.5 to 8 µm. The coupling loss between the fiber and the waveguide is 3-4 dB/facet, and passive excess loss is 0.1-0.2 dB/cm for 3um waveguide. The waveguide was both co- and counter pumped with 150 mW 980nm laser per facet.

EXAMPLE 3

[0123] This example describes production of a dual core Erbium/Yttrbium co-doped amplifier according to the present invention. In one example, substrate 16 is a silicon substrate with an undercladding layer of thermally oxidized SiO_2 of about 15 µm thick. Substrate 16 with the thermal oxide layer can be purchased from companies such as Silicon Quest International, Santa Clara, CA. A layer of active core material is then deposited on substrate 16 with a Shadow Mask as described in the '138 application. Use of a shadow mask results in a vertical taper on each side of a finished waveguide which greatly enhances the coupling of light into and out of the waveguide.

[0124] Active core layer is deposited from a 0.8/0.8 target as described in the '247 application having composition 57.4 cat. % Si, 41.0 cat. % Al, 0.8 cat. % Er, and 0.8 cat. % Yb. The deposition parameters are identical to that of Example 2 described above. The active layer is deposited to a thickness of about 1.2 μm.

[0125] A passive layer of aluminasilicate is then deposited over the active layer. A passive layer of about 4.25 μm thickness can be deposited with an embodiment of target 12 having composition of Si/Al of about 87 cat. % Si and about 13 cat. % Al. The passive layer and active layer are then patterned by standard lithography techniques to form a core that has a width of about 5.0 μm for the active core and tapering to about 3.5 μm at the top of the passive core with an effective length of about 9.3 cm.

[0126] Upper cladding layer is then deposited from a Si/Al target of 92 cat. % Si and 8 cat. % Al. Deposition of the upper cladding layer is shown in Figure 9. In some embodiments, the upper cladding layer can be deposited with a non-biased process. The thickness of the upper cladding layer can be about 10 μm. The amplifier formed by this process is then annealed at 725° C for about 30 min.

[0127] The as-deposited Erbium and Ytterbium concentrations in the active layer of core 303 is 2.3×10^{20} cm^{-3} Erbium concentration and 2.3×10^{20} cm^{-3} Ytterbium concentration. The index of the core is 1.508 and the index of cladding layers are 1.4458 for undercladding layer 302 and 1.452 for uppercladding layer 304. The parameter $\Delta n/n$ is therefore about 5.0%.

[0128] A reverse taper mode size converter, *see* the '138 application, is utilized for coupling light into waveguide amplifier 300. The insertion loss at 1310 nm is about 2 dB. Figure 26 shows the amplifier performance of this example. In Figure 26, amplifier 300 is pumped with 150 mW from one side pumping with 984 nm light. Gain flattening is achieved within about 1 dB in the range 1528 nm to 1562 nm for small input signals (-20 dBm). For large input signals (0 dBm), gain flattening is also achieved within about 1 dB.

<u>EXAMPLE 4</u>

[0129] Another example of production of a waveguide amplifier is described here. Again, substrate 16 can be a Si wafer with about a 15 μm thick thermal oxide as can be purchased from Silicon Quest International, Santa Clara, CA. The embodiment of target 12 for the deposition of the active core can have a composition of about 50 cat. % Si, 48.5 cat. % Al, 1.5 cat. % Er (the "1.5/0" target), which can be fabricated as discussed in the '138 application. Target 12 was first cleaned by sputtering with Ar (80 sccm) only in the metallic mode. Target 12 was then conditioned in poison mode by flowing 60 sccm of Argon and 40 sccm of oxygen respectively.

[0130] The pulsed DC power supplied to target 12 was about 6 kW. Whenever a brand new target was used or when the target has been expose to atmosphere, a long time of condition (for example more than 30hrs of conditioning) may be necessary to ensure films with the best active core property (longest life time and highest photoluminescence) are deposited. Substrate 16 is then preheat at about 350° C for about 30min before deposition.

[0131] The active core film was deposited onto a 6 inch thermal oxide wafer, which has been previously discussed, from the 1.5/0 target. The thermal oxide thickness was about 10 μm as described in previous examples. The active core is deposited to a thickness of about 1.2 μm with a deposition time of approximately 1 hr. The process condition are as listed in Table 4 below.

Table 3

Target Power (KW)	Ar/O2 (sccm)	Pulsing Frequency (KHz)	Bias (W)	Reverse pulsing time (us)
6	60/28	120	100	2.3

[0132] A straight waveguide pattern can then be formed by a standard photolithography procedure. The active core was etched using reactive ion etch followed by striping and cleaning. Finally, a 10 μm top cladding layer is deposited using a similar process. A target having composition 92 cat. % Si and 8 cat. % Al with deposition parameters as described in Figure 9 was used to deposit the top cladding. The difference between the index of refraction between the core and the cladding is then about 3.7%.

[0133] In this example, annealing of the amplifier structure was performed at various anneal temperatures. The results of the various anneals are shown graphically in Figures 27 and 28. Figure 27 shows both internal gain in the C-band and insertion loss at 1310 nm of a 2.5μm wide, 10.1 cm long waveguide as deposited in this example as a function of annealing temperature. The life time in ms and up-conversion constants in cm^{-3}/s measurements for the deposited active core film at different annealing temperature are shown in Figure 28.

EXAMPLE 5

[0134] One of the problems encountered during the reactive sputtering from an alloy metallic target is that the film composition drifts from run to run due to the difference in sputtering yields from the elements that forms the target alloy. For example, with Ar as a sputtering gas, the sputtering yield of Aluminum is about 3-4 times that of Silicon, while sputtering yield of Alumina is only about 50% that of Silica. Therefore, during the metal burn in, more Aluminum is sputtered from the target, resulting in a Si rich target surface. When sputtering in the poison mode, more Silica will be removed from target. Thus, as deposition goes on, the composition of the film deposited on substrate 16 will drift from lower Alumina concentration to higher Alumina concentration. This results in the index of refraction of a film drifting up with subsequent depositions from a target 12, as is shown for the deposition described in Example 4 in Figure 29. Figure 30 shows the drift in photoluminescence pumped at 532 nm with subsequent depositions. Figure 31 shows drift in the excited state lifetime with subsequent depositions from a target. The embodiment of target 12 utilized in Figures 29 through 31 is the 1.5/0 target and the deposition parameters are as described above in Example 4.

[0135] The drift can be stabilized by recondition target 12 prior to deposition. The recondition process (or burn in) consists of both sputtering in metallic mode and then sputtering in poison mode to condition target 12. The burn in time in metallic mode needs to be as short as possible and at the same time insure no arcing during the poison mode deposition. Figure 32 shows the

much improved drift in the index of refraction and the photoluminescence when target 12 is reconditioned between subsequent depositions.

EXAMPLE 6

[0136] This example describes the fabrication of another Er-Yb codoped waveguide amplifier according to the present invention. The active core is deposited with an embodiment of target 12 with composition about **49 cat. % Si, 48 cat. % Al, 1.6 cat. % Er and 0.5 cat. % Yb**, which can be fabricated as described in the '247 application. Target 12 was first cleaned by sputtering with Ar (80 sccm) only in the metallic mode. Target 12 was then conditioned in poison mode by flowing 60 sccm of Argon and 40 sccm of oxygen respectively. The pulsed DC power supplied to target 12 was kept at 5 kW. Table 4 shows photoluminescence and index of refraction of as-deposited films from this example at some typical process conditions. The units for photoluminescence are the number of counts per micron. Lifetime and photoluminescence measured after annealing at various different temperatures are shown in Table 5.

Target 4

Target Power (KW)	Ar/O2 (sccm)	Pulsing Frequency (KHz)	Bias (W)	Reverse pulsing time (us)	532 nm PL/um	Index
5	60/34	120	100	2.3	3367	1.5333
5	60/30	120	100	2.3	3719	1.5334

Table 5

Anneal Temperature °C	Life Time (ms)	PL (532nm)/um
725	3	7000
775	3	7000
800	4	7500
825	4.7	8560
850	5.8	10000
900	6.9	17000

[0137] A waveguide amplifier was fabricated using this material in the similar fashion as described in examples 2-4. The active core was first deposited on substrate 16, which includes a

10um thermal oxide layer, using the following deposition parameters: target power 5KW, pulsing frequency 120KHz, bias 100W, reverse time 2.3us, Argon and Oxygen flow are 60 sccm and 30sccm respectively. The active core thickness is deposited to a thickness about 1.2μm, which takes approximately 1 hr. All wafers are preheated at about 350° C for 30min before deposition. A straight waveguide pattern is then formed by standard photolithography procedure. The active core was etched using reactive ion etch following by striping and cleaning. Next, a 10μm top cladding layer is deposited using similar process. The "92/8" (92 cat. % Si and 8 cat. % Al) metallic target was used to deposit top clad according to deposition parameters shown in Figure 9, resulting in a 4 % index difference between active core and cladding. The wave guide was then annealed at 800° C for about 30 min.

[0138] This waveguide was tested for gain using the method described in previous examples. However no net gain was observed from this waveguide since the passive loss was too high.

EXAMPLE 7

[0139] In addition to active material layers (i.e., layers having rare-earth ion concentrations), passive layers can also be deposited. Figure 9 shows deposition parameters for several target compositions, including some targets for deposition of passive (i.e., alloys of Al and Si with no rare earth ion concentration) layers. In this example, an embodiment of target 12 with a material composition of pure silicon is utilized.

[0140] Apparatus 10 can be based on an AKT 1600 reactor and deposited with about 1 to 3 kW of pulsed DC target power supplied to target 12. Particular depositions have been accomplished at 2.5 kW and 1.5 kW. The frequency of the pulsed DC power is between about 100 and 200 Khz. Some depositions were performed at 200 kHz while others were performed at 100 kHz. The reverse time was varied between about 2 μs and about 4 μs with particular depositions performed at 2.3 μs and 3.5 μs. The bias power to substrate 16 was set to zero.

[0141] Index variation of SiO2 films with bias to substrate 16 and deposition rates as a function of bias power to substrate 16 is shown in Figure 10.

[0142] The process gas included a mixture of Ar, N_2 and O_2. The Ar flow rates was set at 20 sccm while the O_2 flow rate was varied between about 5 and about 20 sccm and the N_2 flow rate was varied from about 2 to about 35 sccm. Figure 33 shows the variation in the index of refraction of a film deposition on substrate 16 as the O_2/N_2 ratio is varied.

EXAMPLE 8

[0143] Alternatively, films can be deposited on substrate 16 from a pure alumina target. In an example deposition with an embodiment of target 12 of alumina in an embodiment of apparatus 10 based on the AKT 1600 reactor, the pulsed DC target power was set at 3 kW and the frequency was varied between about 60 kHz and 200 kHz. The reverse time was set at 2.5 μs. Again, no bias power was supplied to substrate 16. The O_2 flow rate was varied from about 20 to about 35 sccm, with particular depositions performed at 22 and 35 sccm. The Ar flow rate was set at 26 sccm. A post deposition anneal of substrate 16 at 800° C for 30 min. was performed.

[0144] Figure 12 shows the variation of refractive index of the film deposited on substrate 16 with varying frequency of the pulsed DC power supplied to target 12. Figure 11 shows the variation in refractive index of a film deposited on substrate 16 with varying O_2/Ar ratio. As can be seen from Figures 33, 34 and 35, the index of refraction of films deposited from alumina can be adjusted by adjusting the process gas constituents or by adjusting the frequency of the pulsed DC power supplied to target 12 during deposition.

EXAMPLE 9

[0145] Additionally, passive films can be deposited from targets having a composition of Si and Al. For example, layers have been deposited from embodiments of target 12 with composition 83 % Si and 17 % Al. About 4.5 kW of pulsed DC power at about 200 kHz frequency was supplied to target 12. The reverse time was about 2.2 μs. A bias power of about 150 W was

supplied to substrate 16 during deposition. Figures 14 and 15 show variation of the index of refraction for subsequent runs from this target.

[0146] The examples and embodiments discussed above are exemplary only and are not intended to be limiting. One skilled in the art can vary the processes specifically described here in various ways. Further, the theories and discussions of mechanisms presented above are for discussion only. The invention disclosed herein is not intended to be bound by any particular theory set forth by the inventors to explain the results obtained. As such, the invention is limited only by the following claims.

Claims

We claim:

1. A method of depositing a film on a substrate, comprising:

providing pulsed DC power through a filter to a target;

providing bias power to a substrate positioned opposite the target;

providing process gas between the target and the substrate,

wherein the filter protects a pulsed DC power supply from the bias power.

2. The method of Claim 1, further including holding the temperature of the substrate substantially constant.

3. The method of Claim 1, wherein providing pulsed DC power through the filter includes supplying up to about 10 kW of power at a frequency of between about 40 kHz and about 350 kHz and a reverse time pulse between about 1.3 and 5 μs.

4. The method of Claim 1, wherein providing bias power to the substrate includes supplying up to 1000 W of RF power to the substrate.

5. The method of Claim 4, wherein the filter is a band reject filter at the frequency of the bias power.

6. The method of claim 4, wherein the bias power is zero.

7. The method of Claim 1, wherein the film is an upper cladding layer of a waveguide structure and the bias power is optimized to provide planarization.

8. The method of Claim 1, wherein the process gas includes a mixture of Oxygen and Argon.

9. The method of Claim 9, wherein the Oxygen flow is adjusted to adjust the index of refraction of the film.

10. The method of Claim 8, wherein the process gas further includes nitrogen.

11. The method of Claim 1, wherein providing pulsed DC power to a target includes providing pulsed DC power to a target which has an area larger than that of the substrate.

12. The method of Claim 1, further including uniformly sweeping the target with a magnetic field.

13. The method of Claim 12, wherein uniformly sweeping the target with a magnetic field includes sweeping a magnet in one direction across the target where the magnet extends beyond the target in the opposite direction.

14. The method of Claim 1, further including depositing a film on the backside of target 12.

15. A reactor according to the present invention, comprising:

a target area for receiving a target;

a substrate area opposite the target area for receiving a substrate;

a pulsed DC power supply; and

a bias power supply coupled to the substrate.

16. The reactor of Claim 15, wherein the target has a surface area greater than the surface area of the substrate.

17. The reactor of Claim 15, further including a scanning magnet which provides uniform erosion of the target.

18. The reactor of Claim 17, wherein the scanning magnet scans across the target in a first direction and extends in a second direction perpendicular to the first direction.

19. The reactor of Claim 18, wherein the magnet extends beyond the target in the second direction.

20. A method of depositing a film on a substrate, comprising:

conditioning a target;

preparing the substrate;

adjusting the bias power to the substrate;

setting the process gas flow; and

applying pulsed DC power to the target to deposit the film.

21. The method of Claim 20, wherein conditioning the target includes sputtering with the target in a metallic mode to remove the surface of the target and sputtering with the target in poisonous mode to prepare the surface.

22. The method of Claim 21, wherein setting the process gas flow includes adjusting constituents in order to adjust the index of refraction of the film.

23. The method of Claim 21, wherein applying pulsed DC power includes setting the frequency in order to adjust the index of refraction of the film.

24. The method of Claim 21, further including adjusting a temperature of the substrate in order to adjust the index of refraction of the film.

25. A method of forming a waveguide amplifier, comprising:

providing a substrate with an undercladding layer;

providing a target having a concentration of rare-earth ions opposite the substrate;

supplying process gas between the target and the substrate;

applying pulsed DC power through a filter to the target to deposit a film;

patterning the film to form a core;

depositing an uppercladding layer over the core.

26. The method of Claim 25, wherein providing a substrate includes providing a silicon substrate with a thermal oxide layer.

27. The method of Claim 25, wherein providing a target includes providing a target having a concentration of up to about 5 cat. % of rare earth ions.

28. The method of Claim 27, wherein providing a target includes providing a target of Al and Si.

29. The method of claim 25, wherein providing a target includes providing a target with a concentration of Al.

30. The method of Claim 29, wherein providing a target includes providing a target with a concentration of Si.

31. The method of Claim 29, wherein providing a target includes providing a target with a concentration of rare earth ions.

32. The method of Claim 25, further including providing bias power to the substrate.

33. The method of Claim 25, further including scanning a magnet over the target.

34. The method of Claim 25, wherein scanning the magnet over the target includes moving the magnet in a first direction.

35. The method of Claim 34, wherein the magnet extends beyond the target in a second direction perpendicular to the first direction.

36. The method of Claim 25, wherein the target has a surface area greater than the surface area of the substrate.

37. The method of Claim 32, wherein the filter rejects power at a frequency of the bias power.

38. A sputtering apparatus, comprising:

means for providing pulsed DC power to a target; and

means for providing bias power to a substrate.

39. The apparatus of Claim 38, further including

means for providing process gas between the target and the substrate.

M-12245 US
852923 v1

Biased Pulse DC Reactive Sputtering of Oxide Films

Hongmei Zhang
Mukundan Narasimhan
Ravi Mullapudi
Richard E. Demaray

Abstract

A biased pulse DC reactor for sputtering of oxide films is presented. The biased pulse DC reactor couples pulsed DC at a particular frequency to the target through a filter which filters out the effects of a bias power applied to the substrate, protecting the pulsed DC power supply. Films deposited utilizing the reactor have controllable material properties such as the index of refraction. Optical components such as waveguide amplifiers and multiplexers can be fabricated using processes performed on a reactor according to the present inention.

M-12245 US
1/27

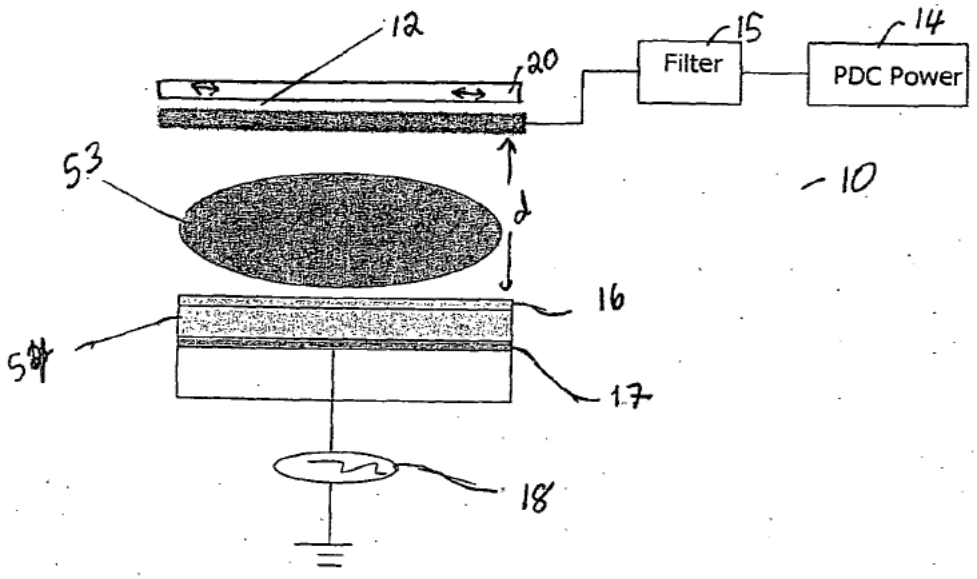

Figure 1A

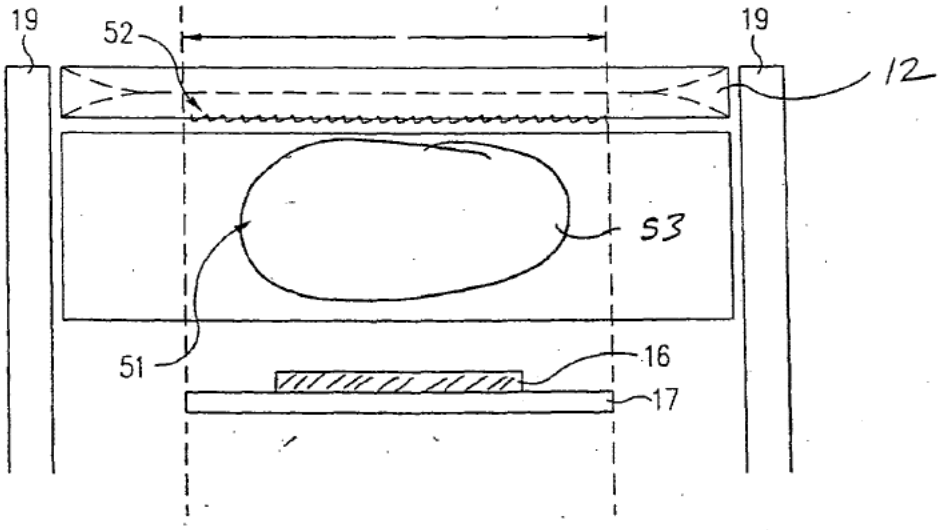

FIG. 1B

M- 12245 US
2/27

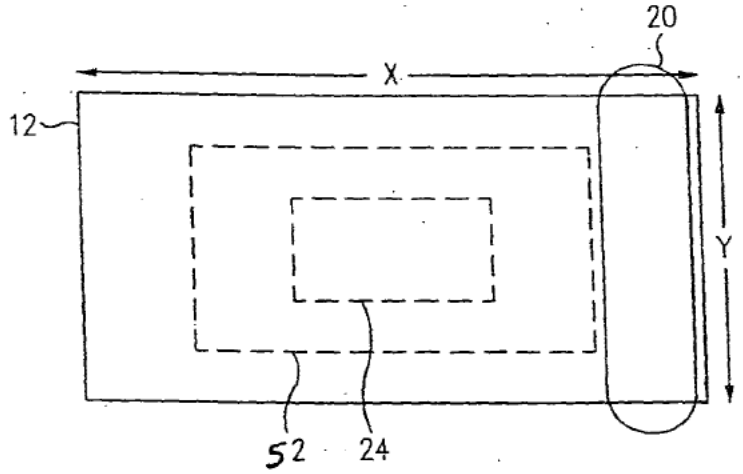

FIG. 2

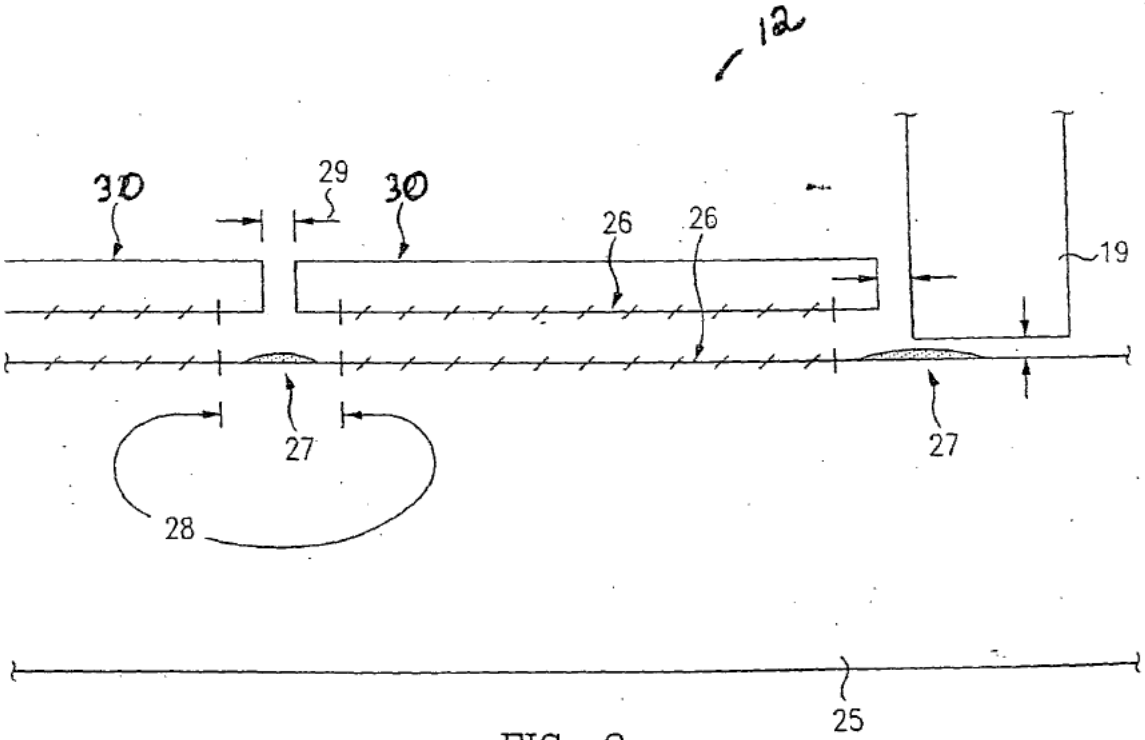

FIG. 3

m- 12245 US
3/27

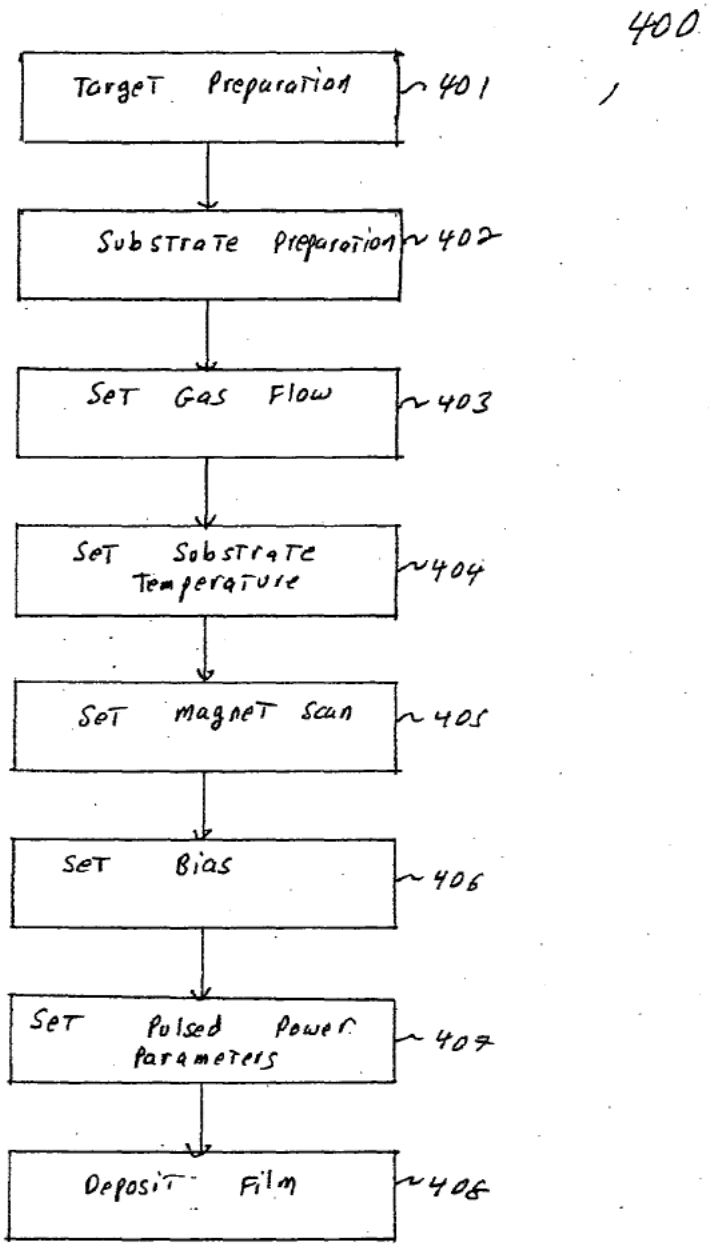

Figure 4

m- 12245 US
4/27

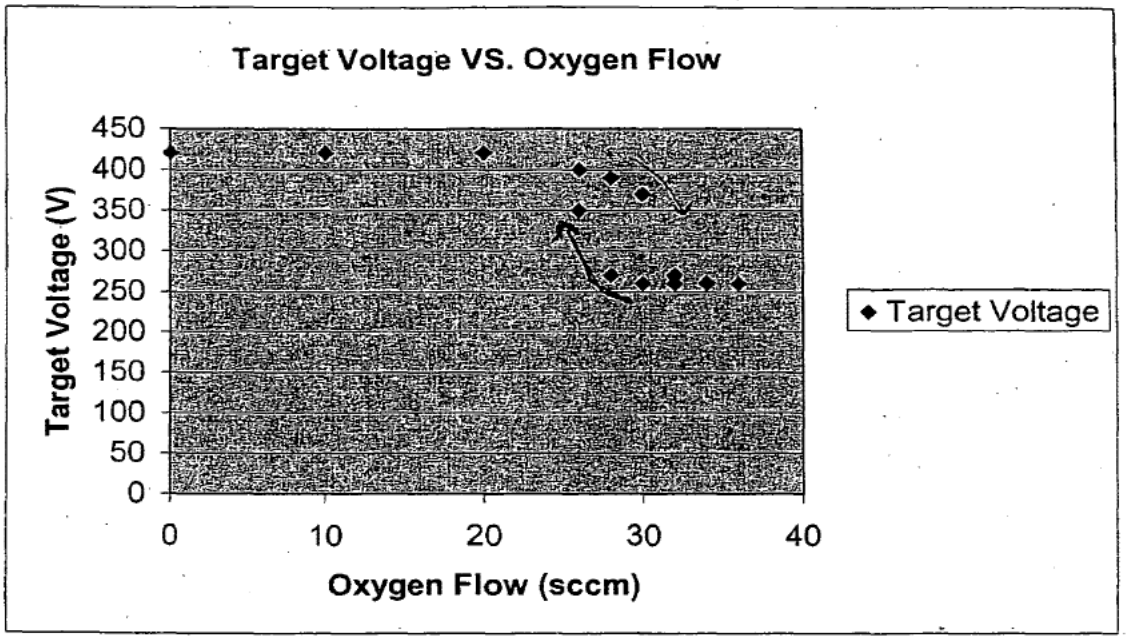

Figure 5

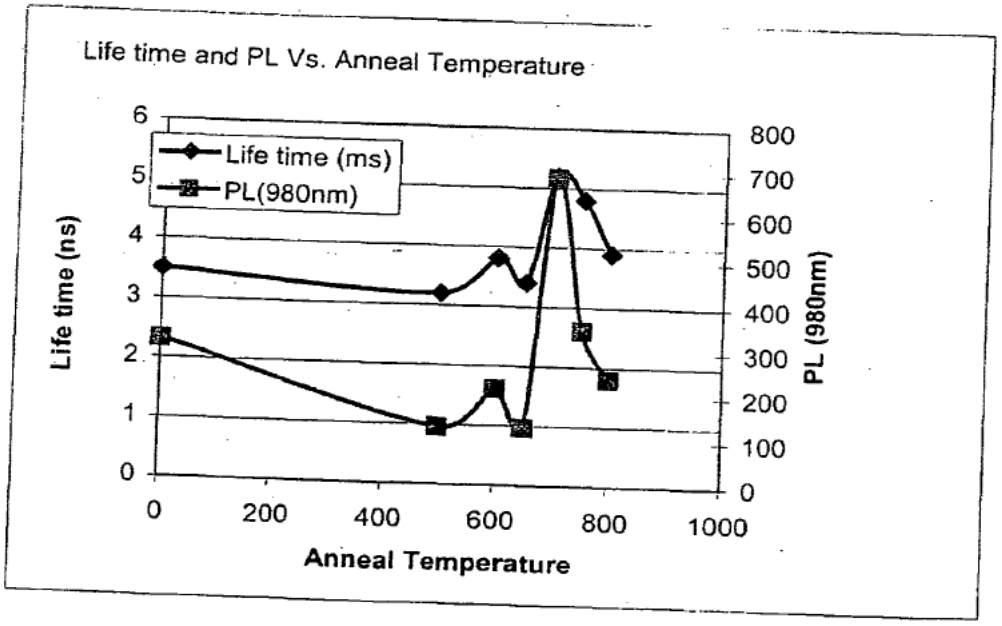

Figure 6

m-18245 US
5/87

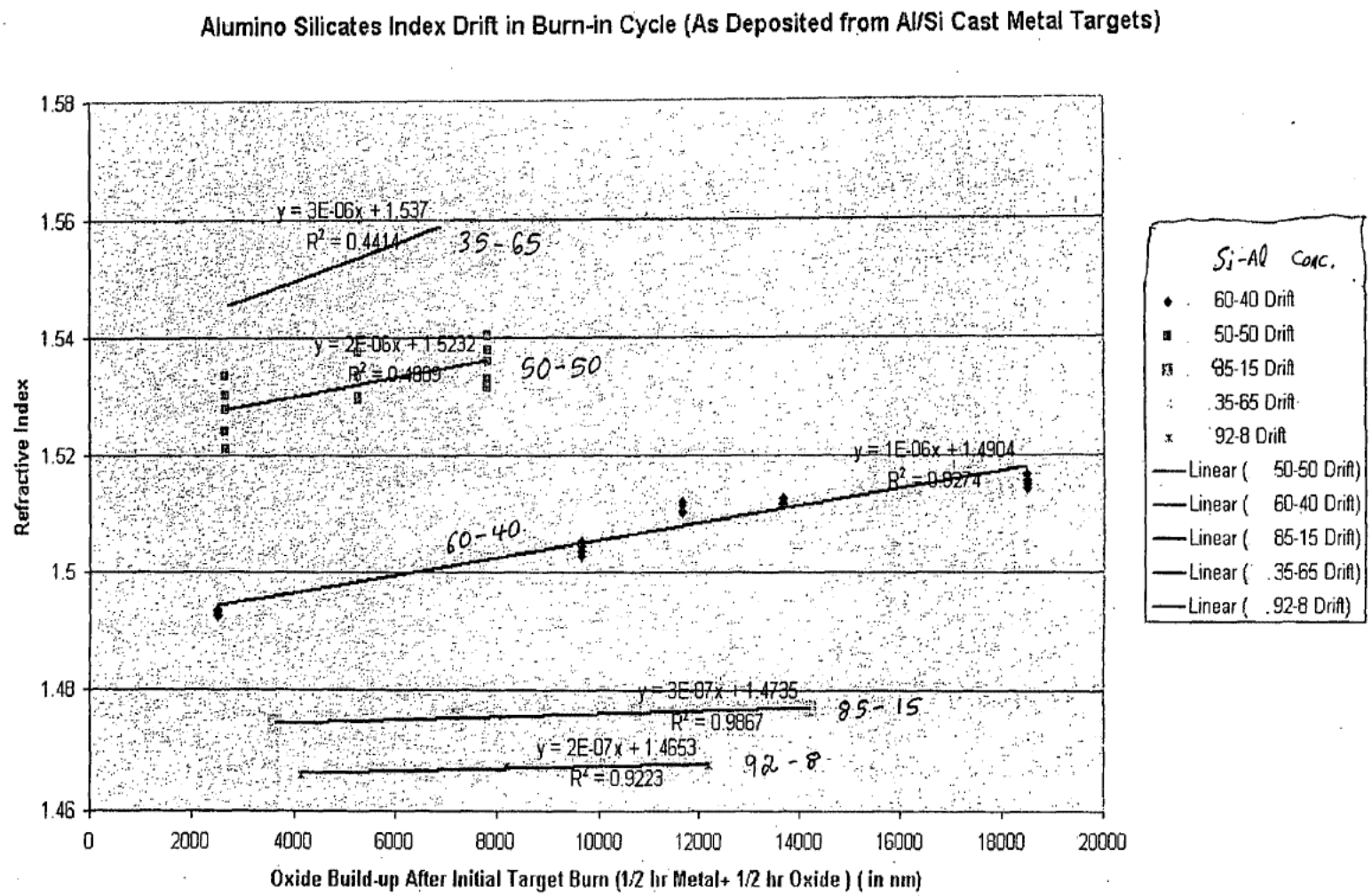

Figure 7

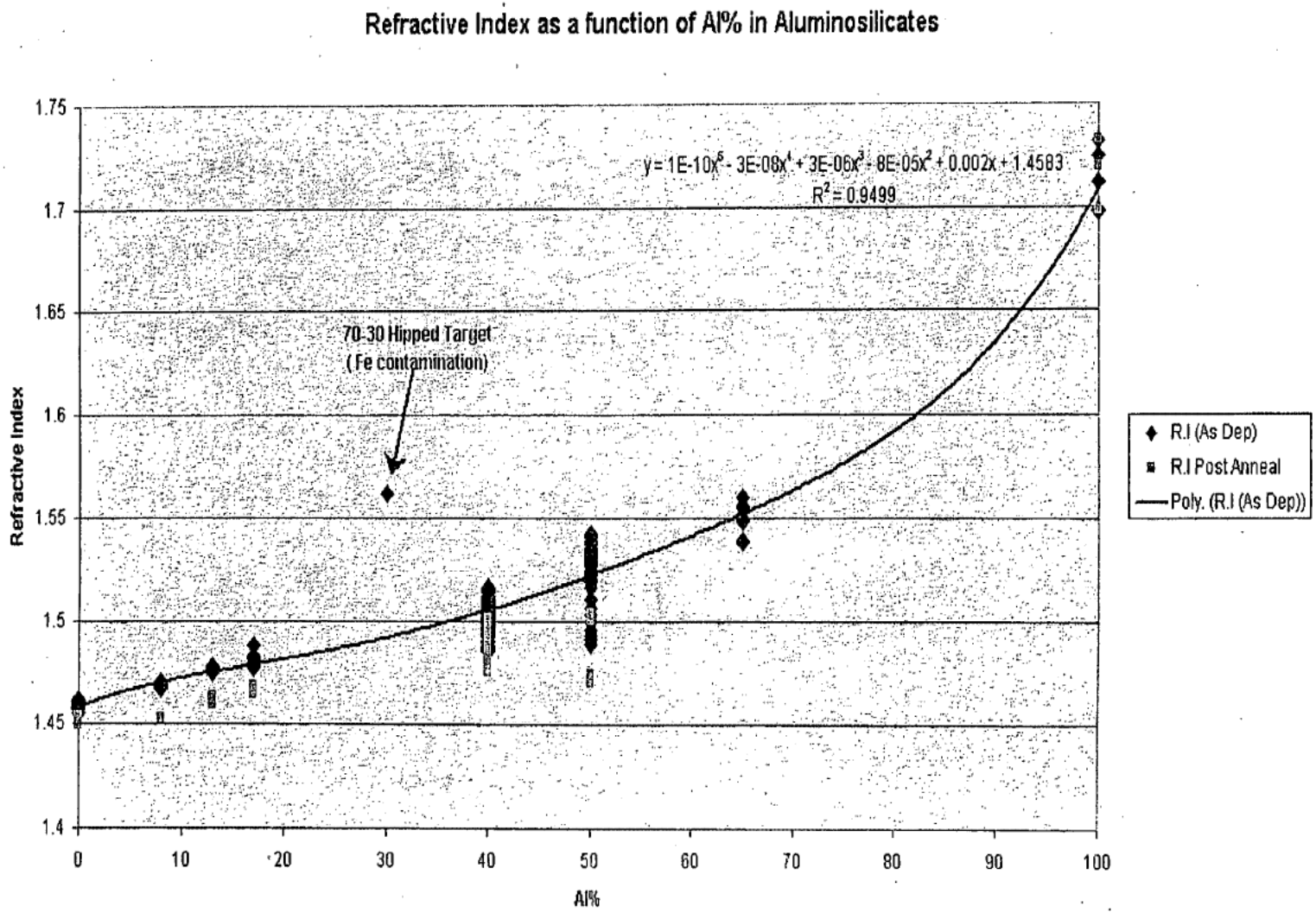

Figure 8

m- 12245 US
6/27

m-12245 US
7/27

Material (Er/Yb/Al/Si)	Expected index (Post anneal)	Actual index (Post anneal)	Process Conditions (Annealed 725c 30min)
0.8/0.8/41.4/57	1.506	1.510	6KW, Ar-60,O2-28sccm, 120KHz, 2.2us, 60mm T-W Space, 4-5mm T-M Space, 0-400W Bias
1.6/0.5/49/48.9	1.526	1.528	6KW, Ar-60,O2-28sccm, 120KHz, 2.2us, 60mm T-W Space, 4-5mm T-M Space, 0-400W Bias
0/0/8/92	1.452	1.456-1.459	4.5KW, Ar-30-60,O2-28-44, 120-200Khz, 2.2us, 60-85mm T-W Space, 4-5mm T-M Space, 0-400W Bias
0/0/40/60	1.504	1.486-1.501	3.0-4.5KW, Ar-30,O2-44, 75-200Khz, 2.2-3.0us, 60-85mm T-W Space, 4-5mm T-M Space, 0-400W Bias
0/0/50/50	1.520	1.491-1.503	4.0-4.5KW, Ar-30,O2-44, 75-200Khz, 2.2-3.0us, 60-85mm T-W Space, 4-5mm T-M Space, 0-400W Bias
0/0/65/35	1.544	1.545-1.560	4.5-5.5KW, Ar75-90, O285-100, 200Khz,2.2us, 85mm T-W Space, 4-5mm T-M Space, 0-400W Bias
0/0/30/70	1.490	1.562 (high Fe content)	5.0KW, Ar75, O2-100, 200Khz,2.2us, 85mm T-W Space, 4-5mm T-M Space, 0-400W Bias
1.5/0/48.5/50	1.523	1.509-1.513	6KW, Ar-60,O2-28sccm, 120KHz, 2.2us, 60mm T-W Space, 4-5mm T-M Space, 0-400W Bias

Figure 9

m-12285 US
8/27

Bias Power (Watts)	DC Power (KW)	Pulsing Freq (KHz)	Reverse Time (µs)	Ar Flow (sccms)	O2 Flow (sccms)	Wafer Position	Target To Wafer Spacing (mm)	Refractive Index Avg (@1550nm)	Refractive Index STD (@1550nm)	Dep Rate (um/Hr)
150	4.5	200	2.2	100	100	1	55	1.461508	0.000535	0.957654
150	4.5	200	2.2	100	100	2	55	1.462329	0.000376	0.962581
400	4.5	200	2.2	100	100	1	55	1.462774	0.000103	0.814007
400	4.5	200	2.2	100	100	2	55	1.463583	0.000095	0.824566

Figure 10

m-12245 US
9/27

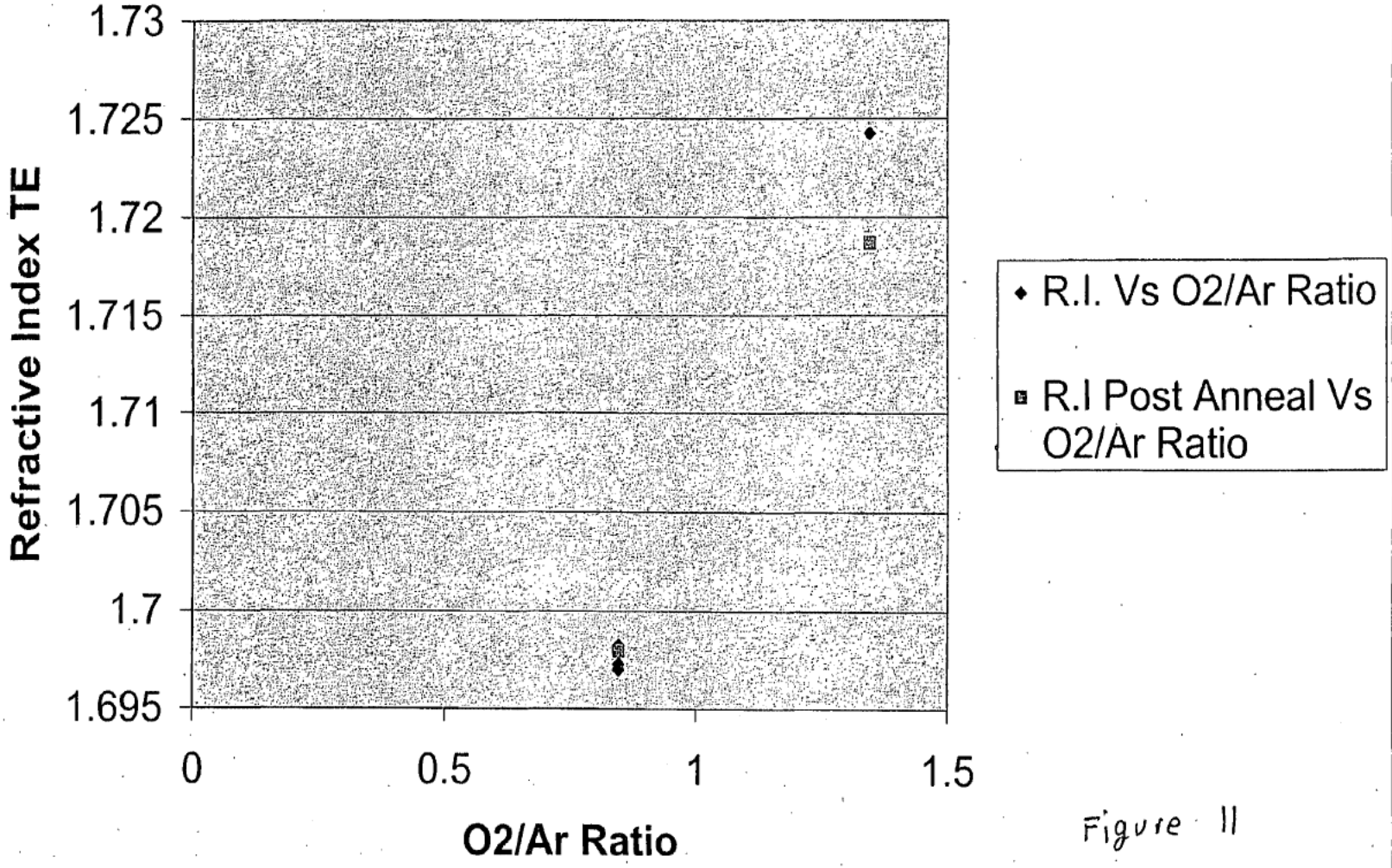

Figure 11

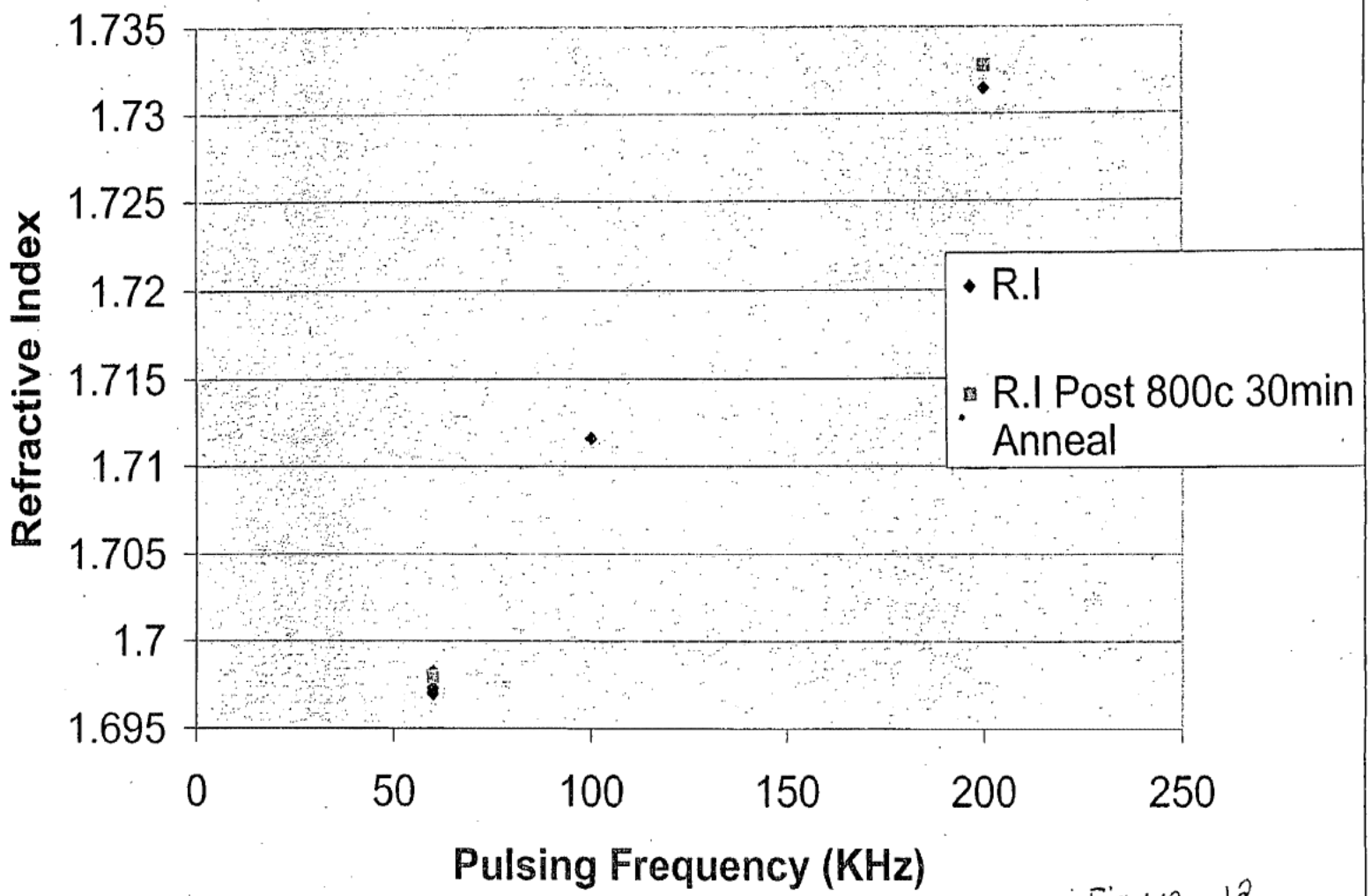

Figure 12

m-12295 US
10/27

m-12 245 US
11/27

Target 92-8
AET 4300 Based Reactor

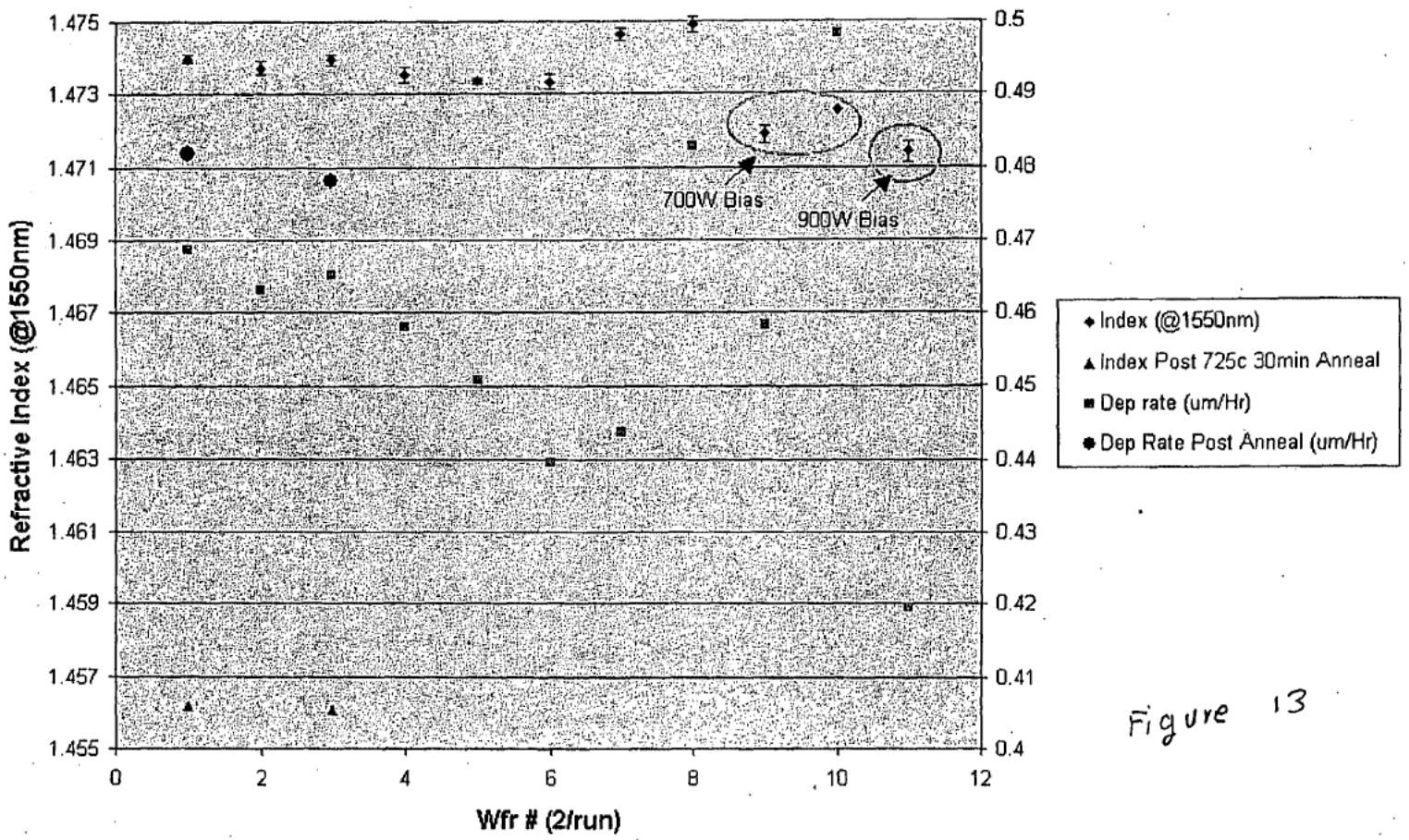

Figure 13

m-12245 US
12/27

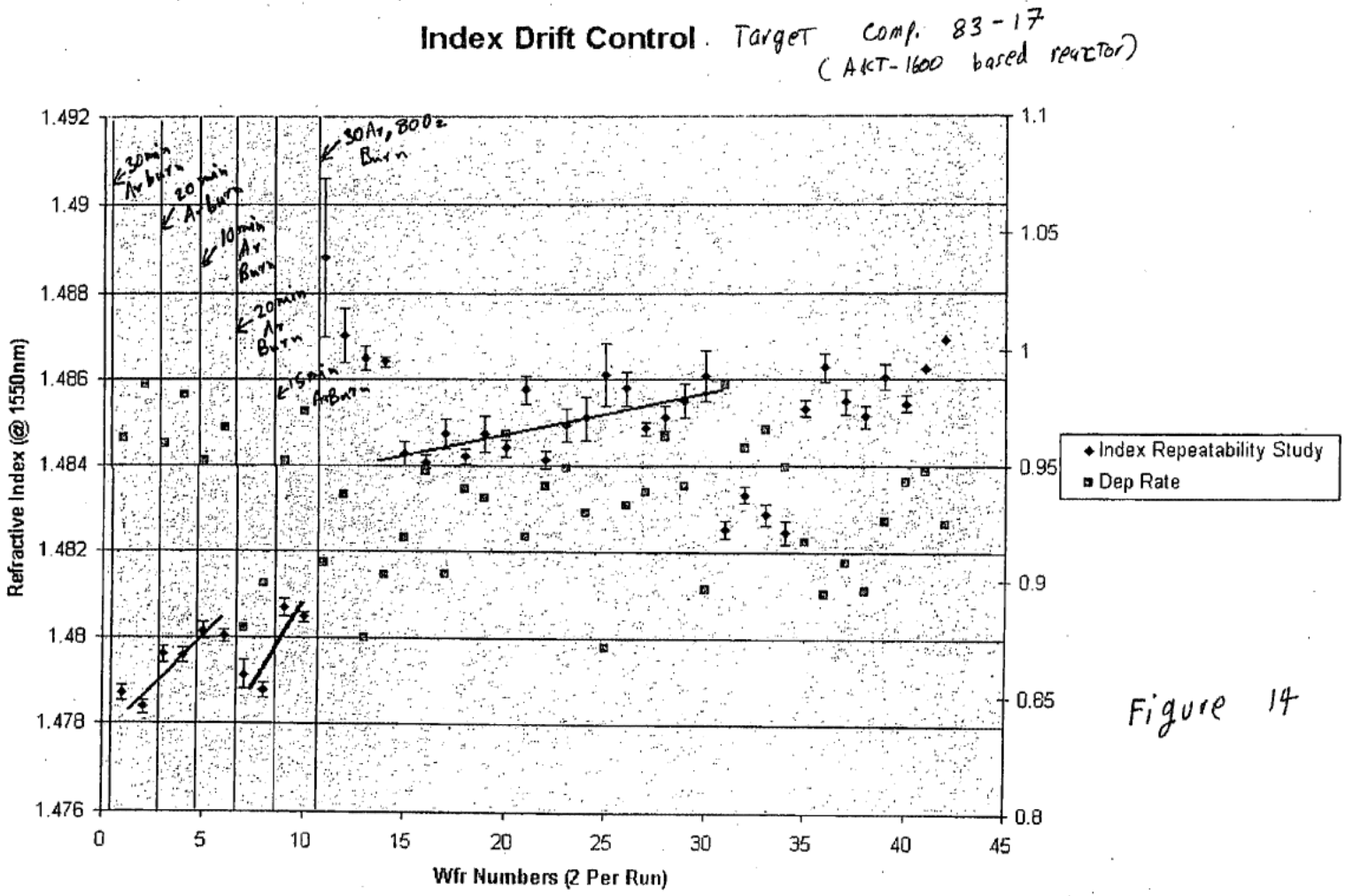

Figure 14

83-17 Target / AKT 1600 based reactor.

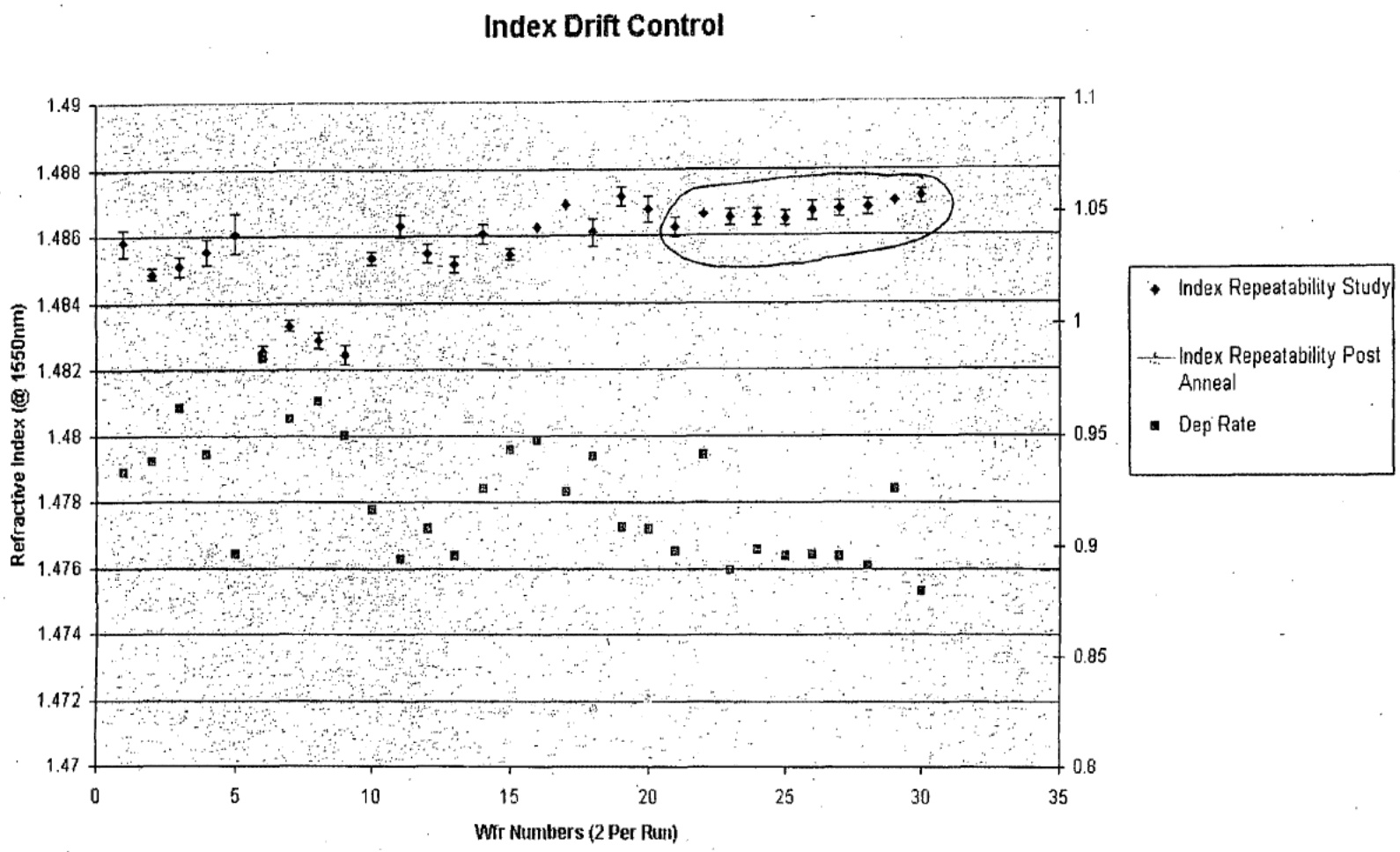

Figure 15

M- 12245 US
13/27

m- 12245 US
14/27

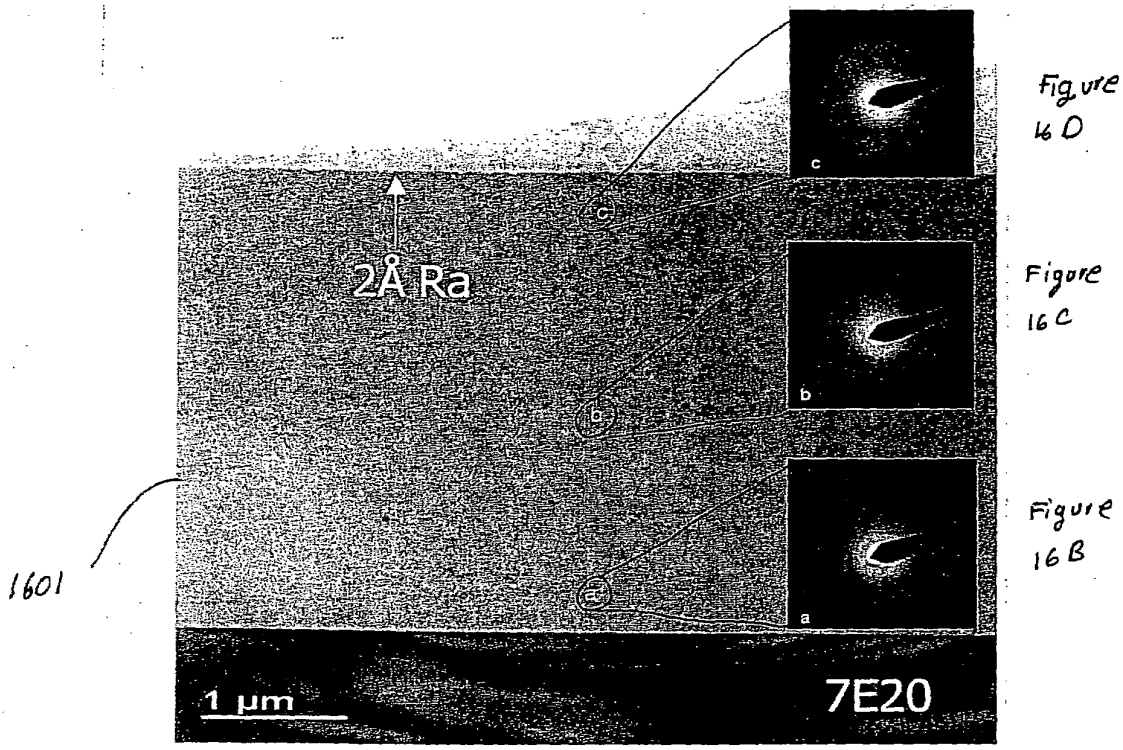

Symmorphix PVD aluminosilicate

Figure 16 A

m-12245 US
15/27

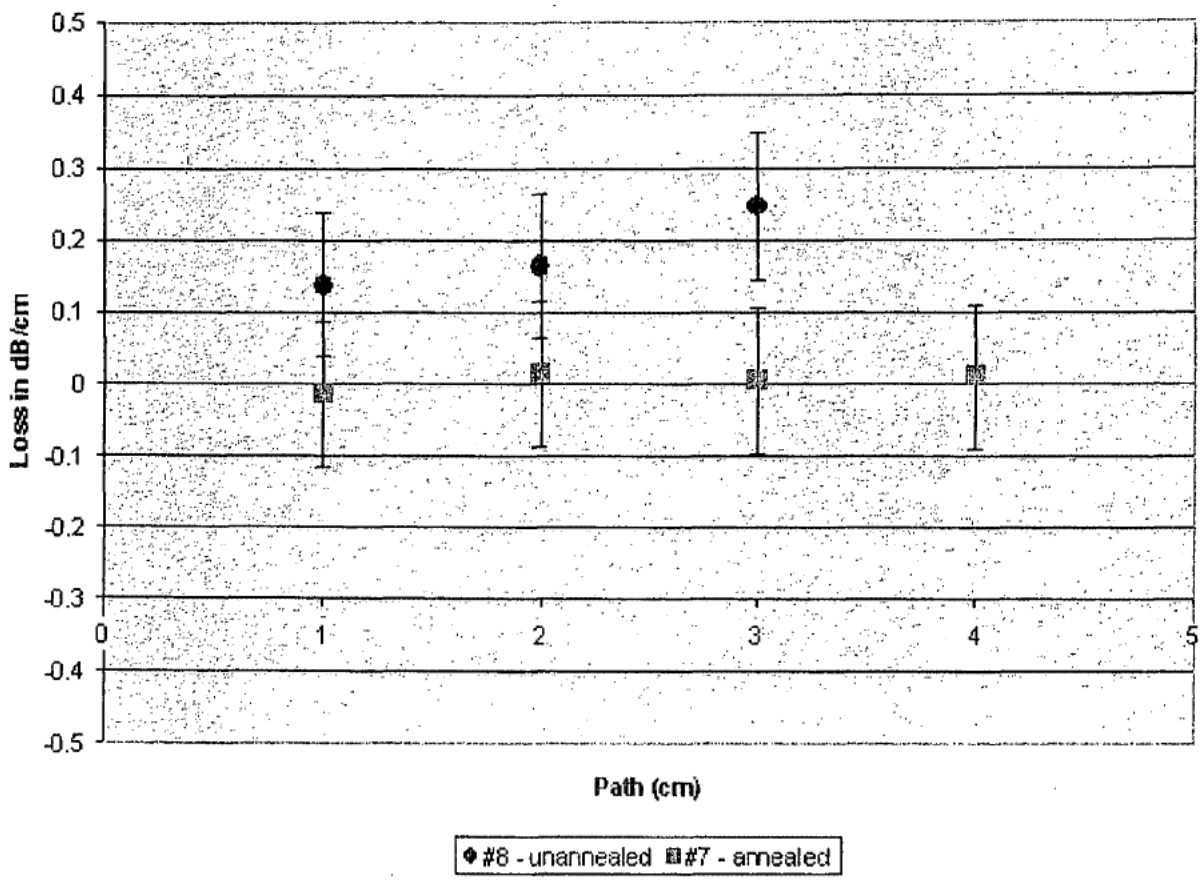

Figure 17

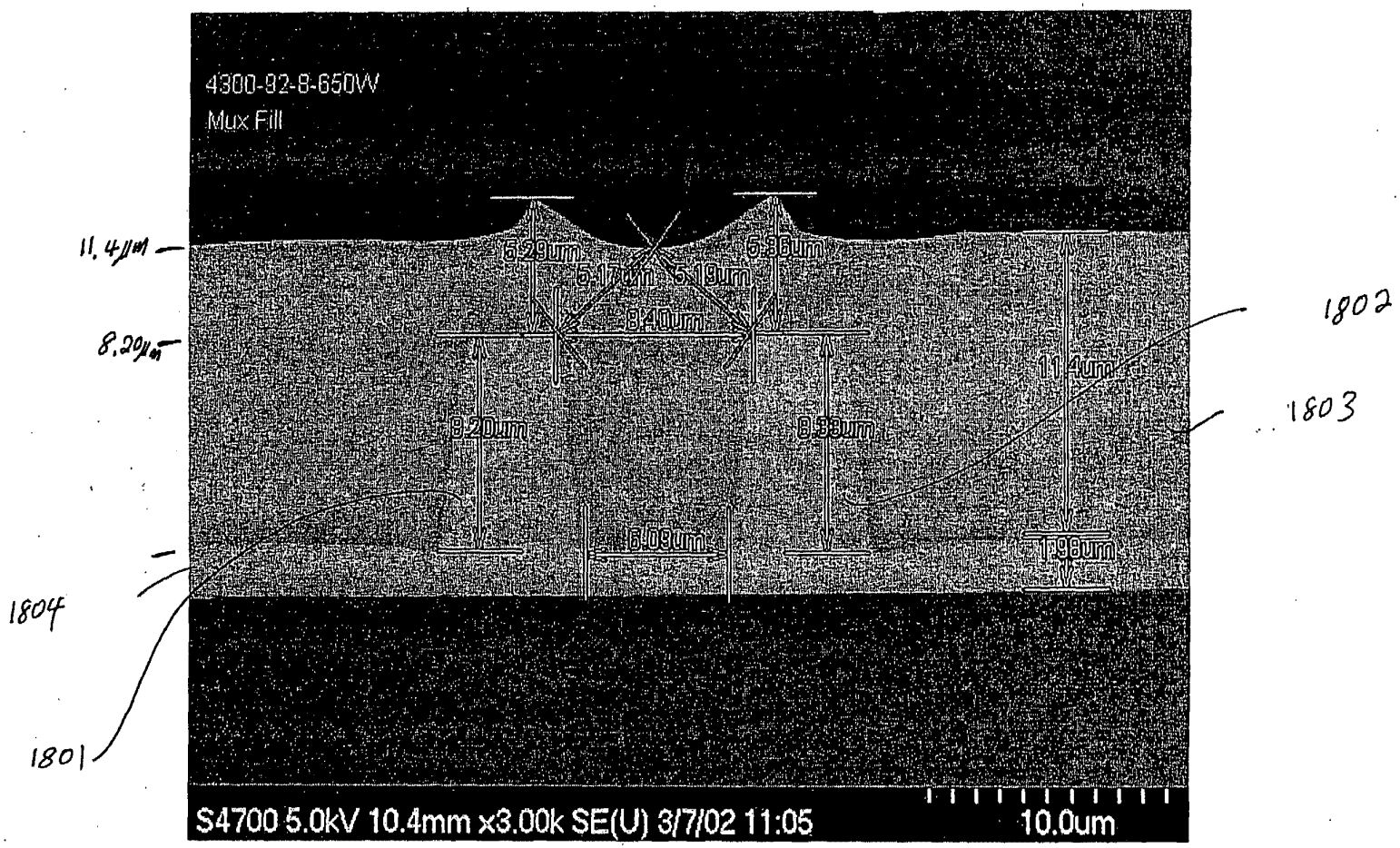
4300-92-8-650W
Mux Fill
11.4µm
8.20µm
5.29um
5.17um
5.19um
5.36um
8.40um
11.4um
3.20um
8.33um
6.09um
1.98um
1802
1803
1804
1801
S4700 5.0kV 10.4mm x3.00k SE(U) 3/7/02 11:05
10.0um

Figure 18

M-12245 US
17/27

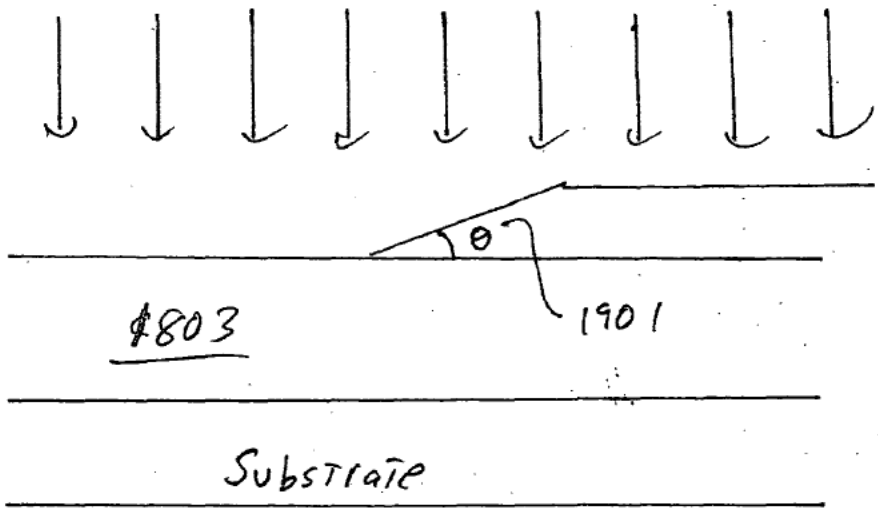

Figure 19

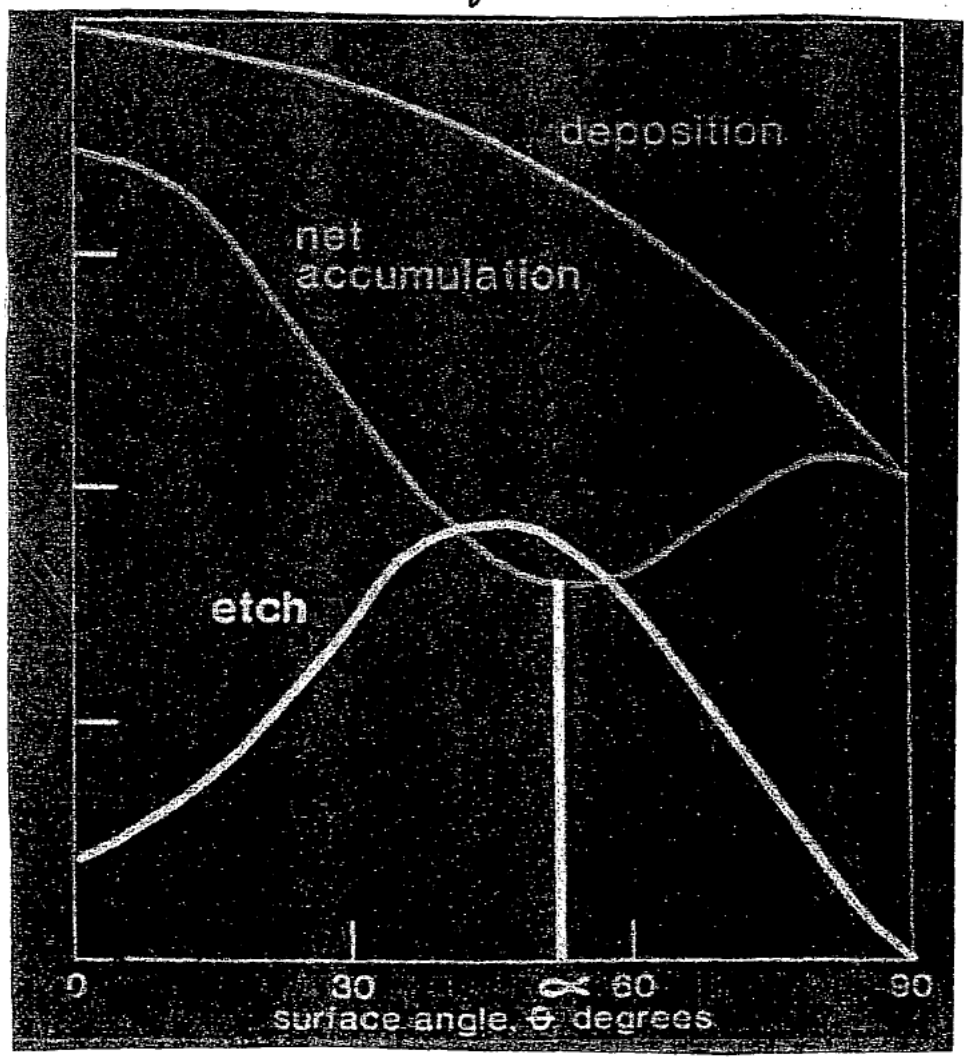

Figure 20

m-12245 US
18/27

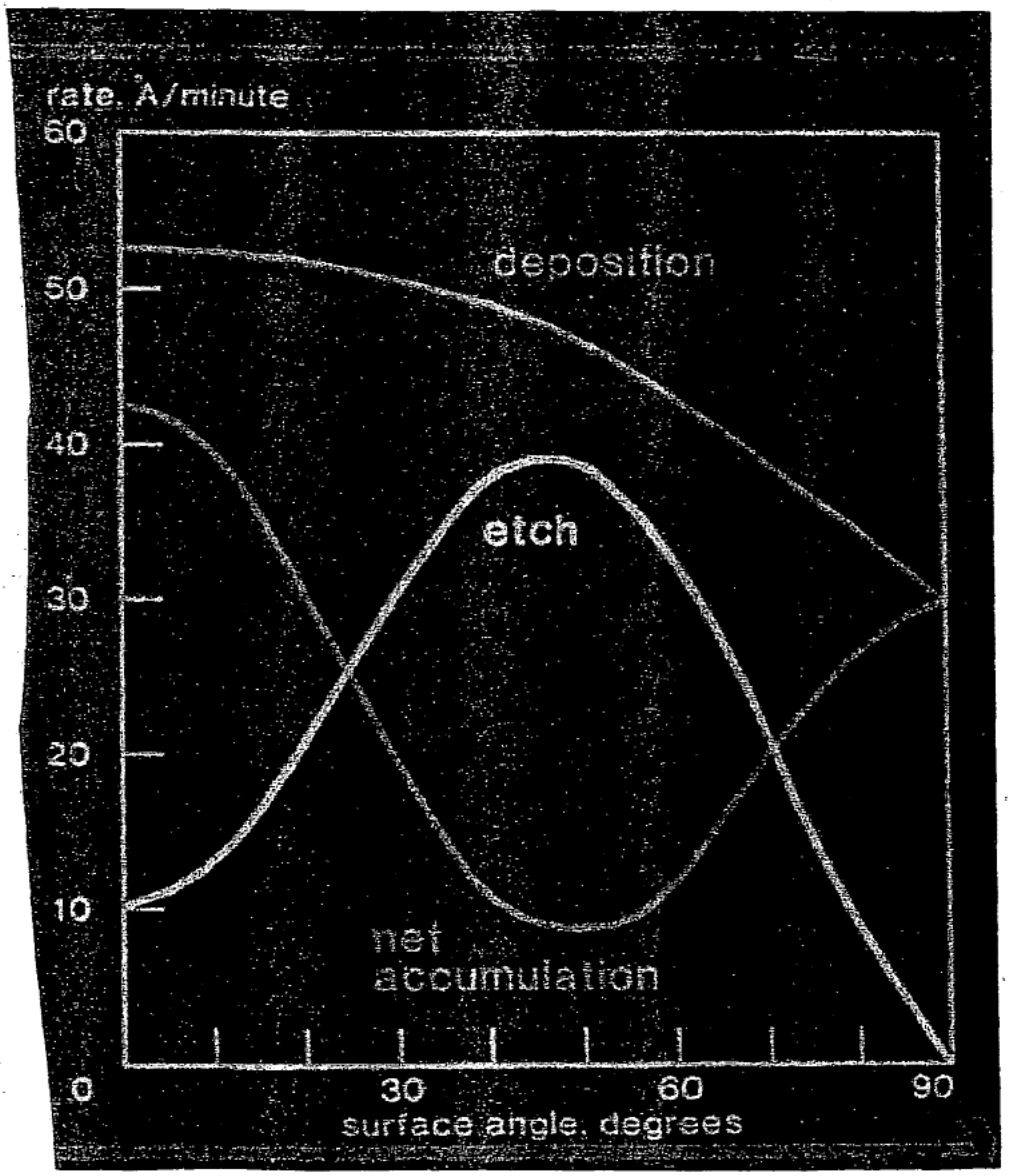

Figure 21

m-12245 US
19/27

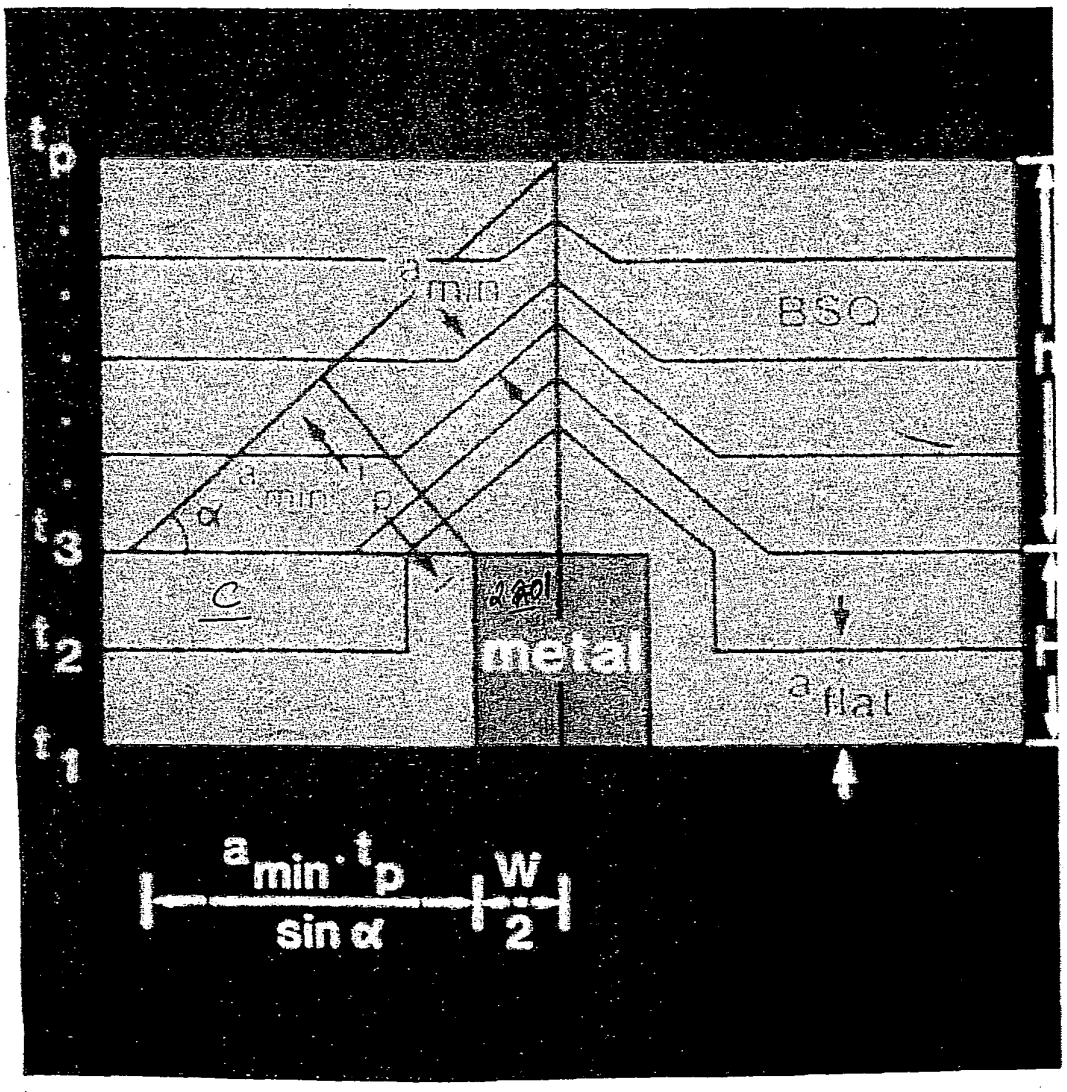

Figure 22

m-12 24S US
20/27

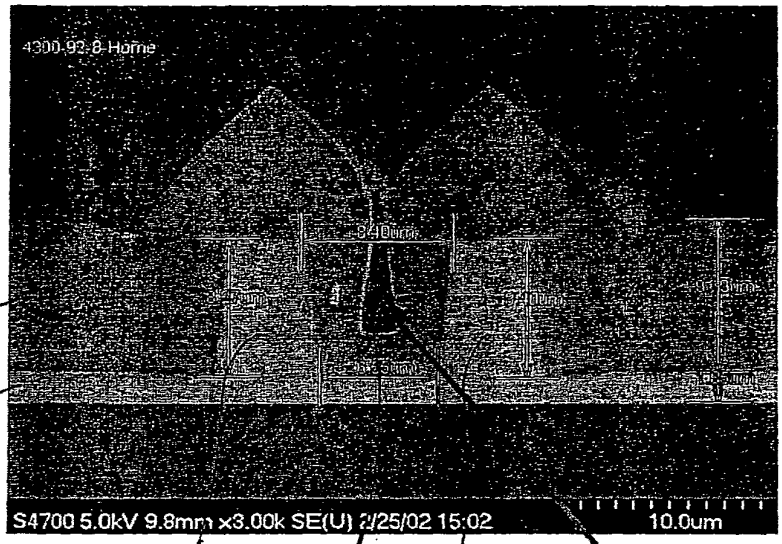

1803
1804
1801
2301
1802

Figure 23

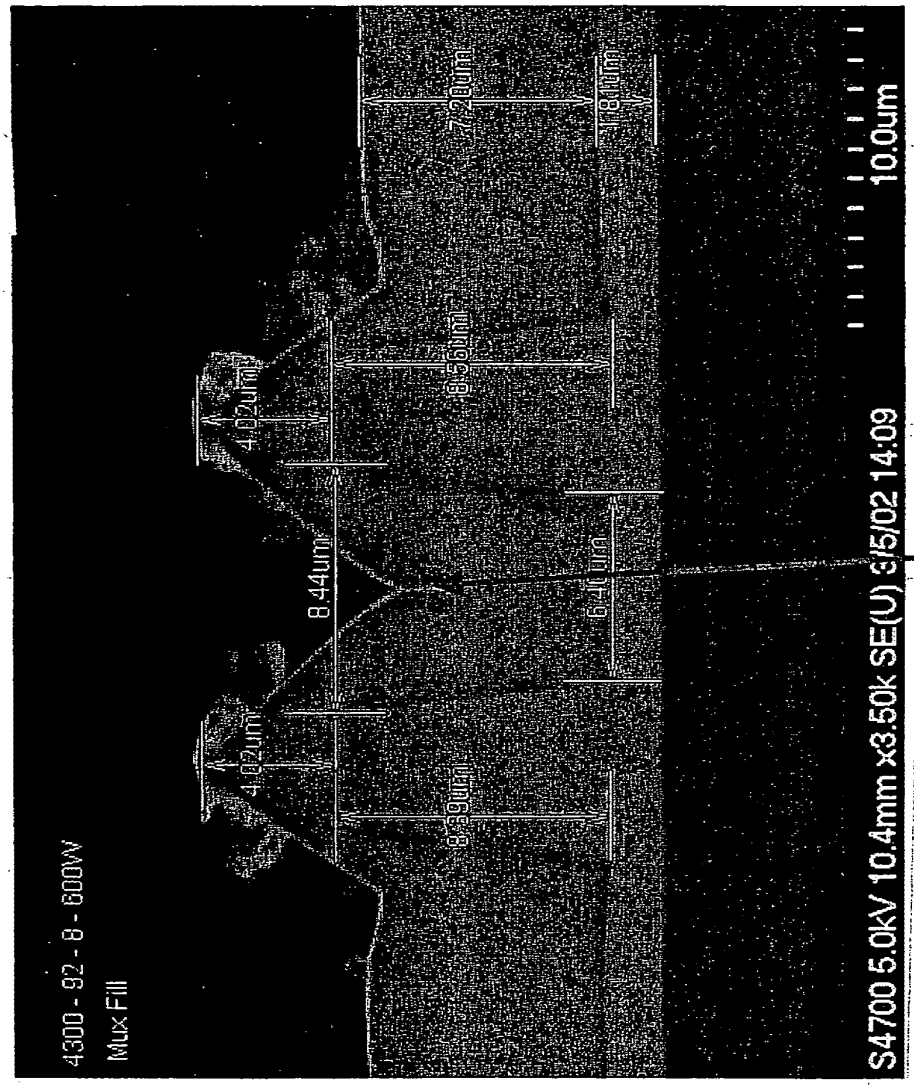

106

Figure 2h

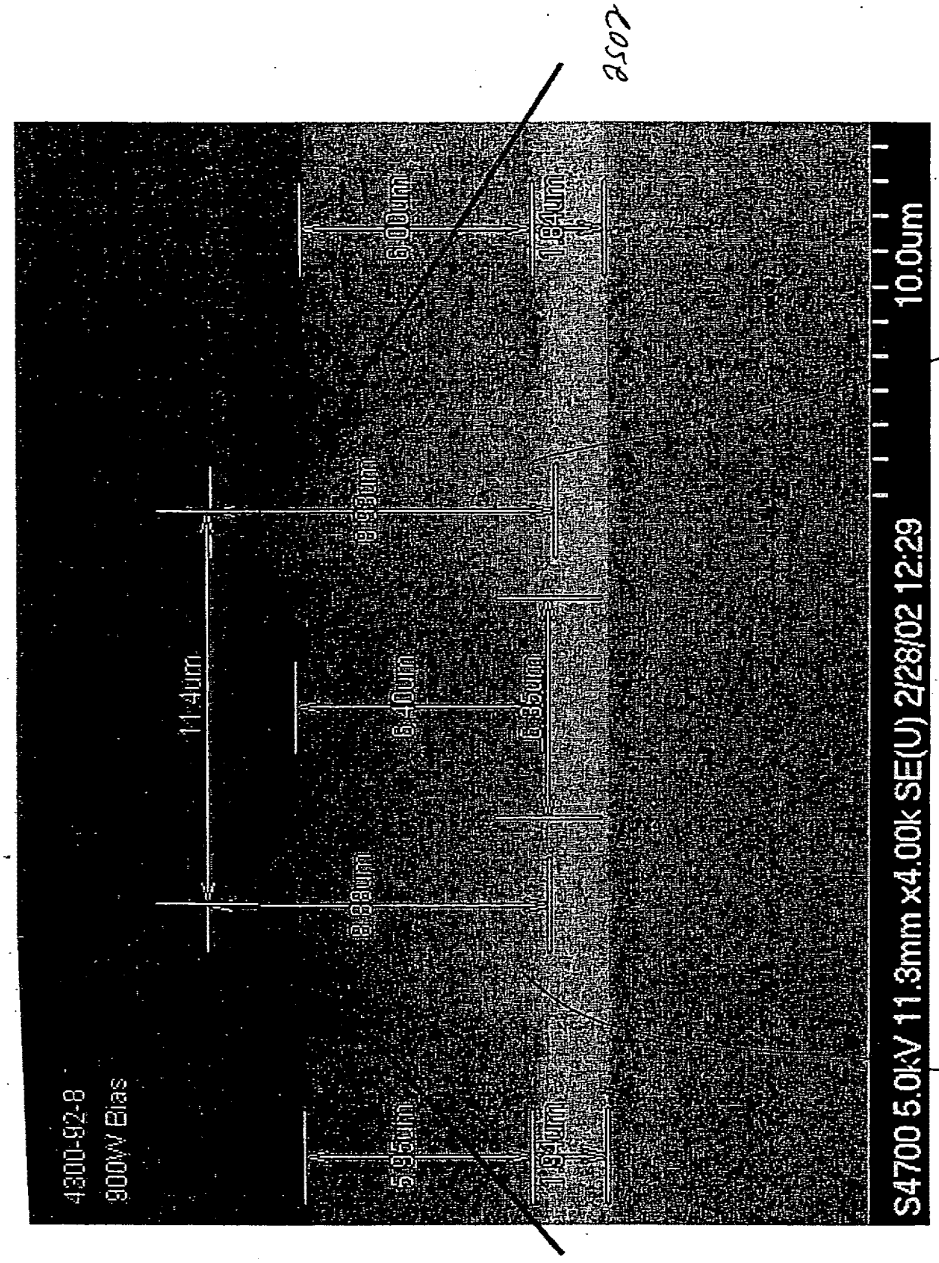
4300-92-8
900W Bias
11.4um
8.88um
5.95um
8.88um
6.40um
1.35um
1.96um
1.78um
8.00um
S4700 5.0kV 11.3mm x4.00k SE(U) 2/28/02 12:29
10.0um

Figure 25

m- 12245 US
23/27

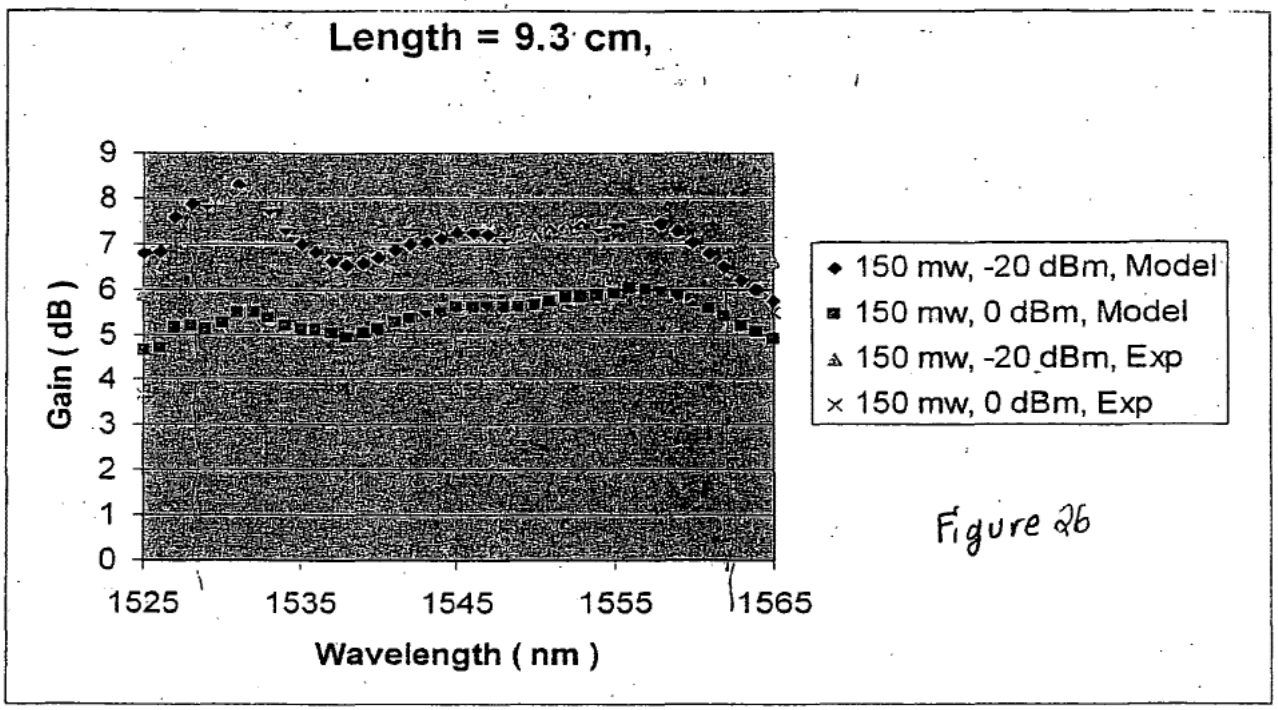

Figure 26

m- 12 245 US
24/27

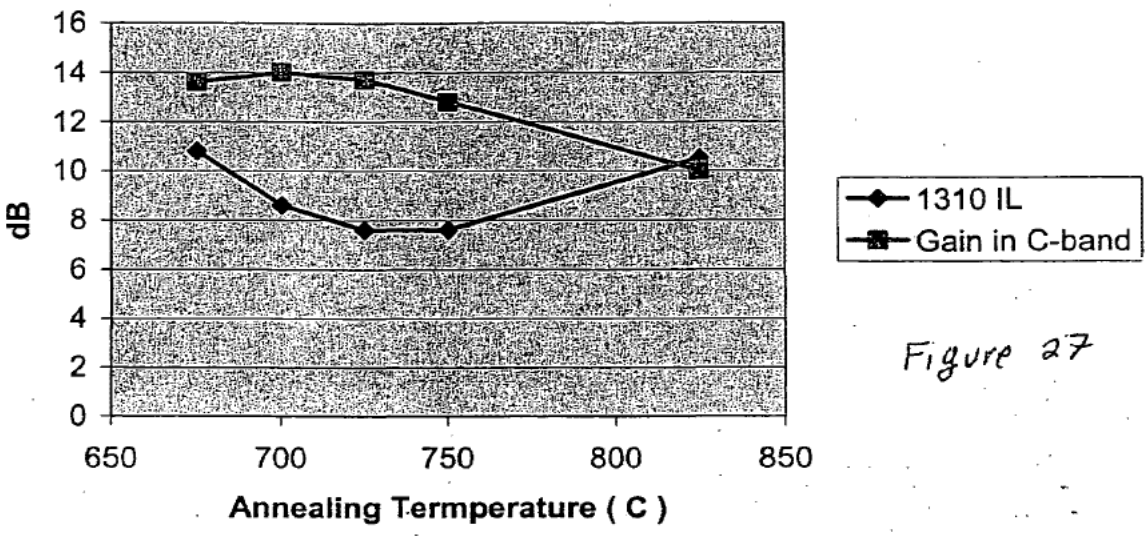

Figure 27

Figure 28

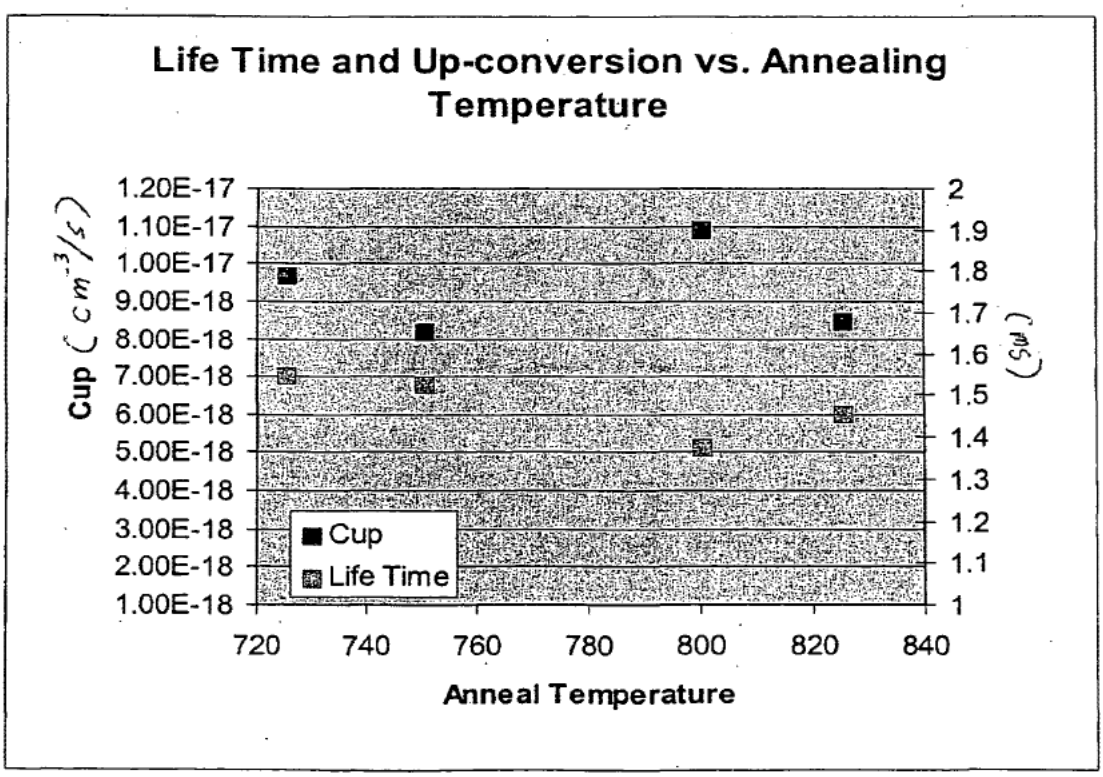

M-12245 US
25/27

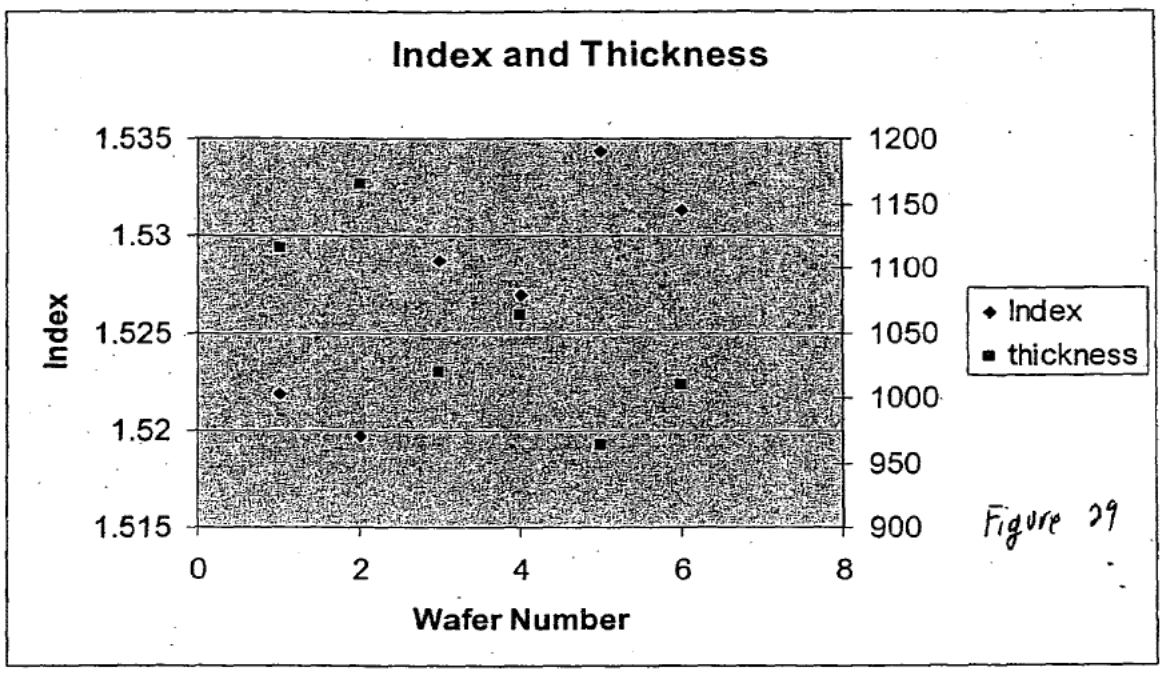

Figure 29

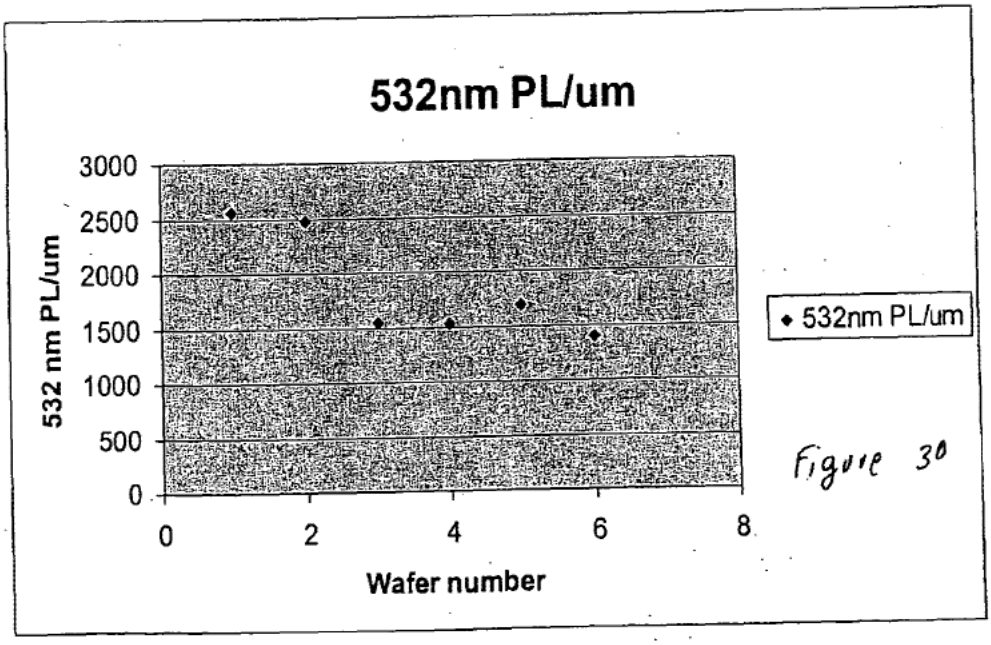

Figure 30

m- 12245 US
26/27

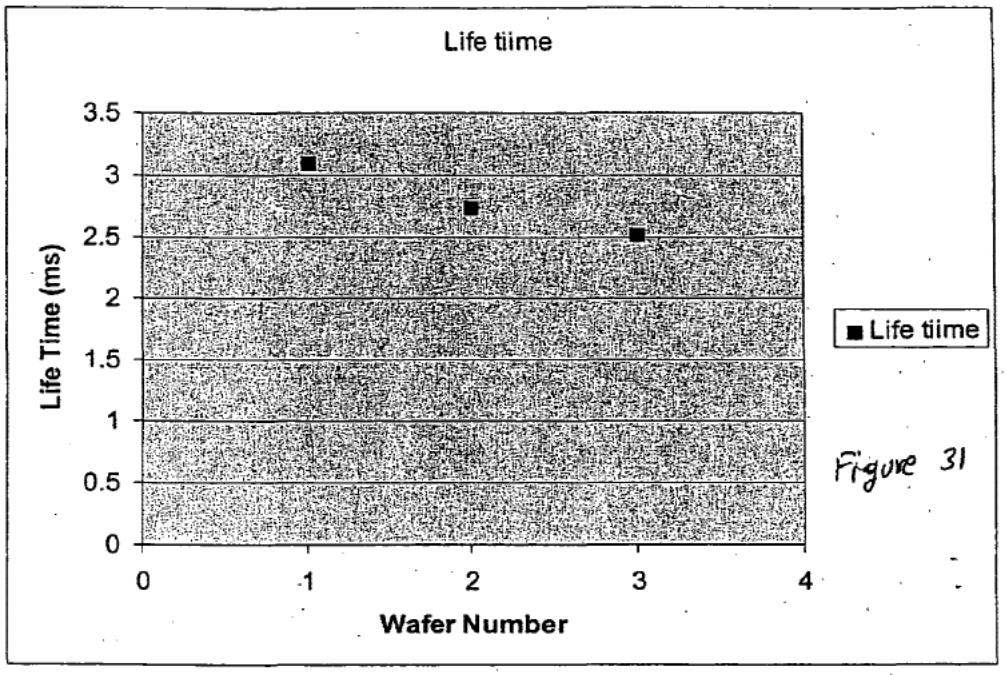

Figure 31

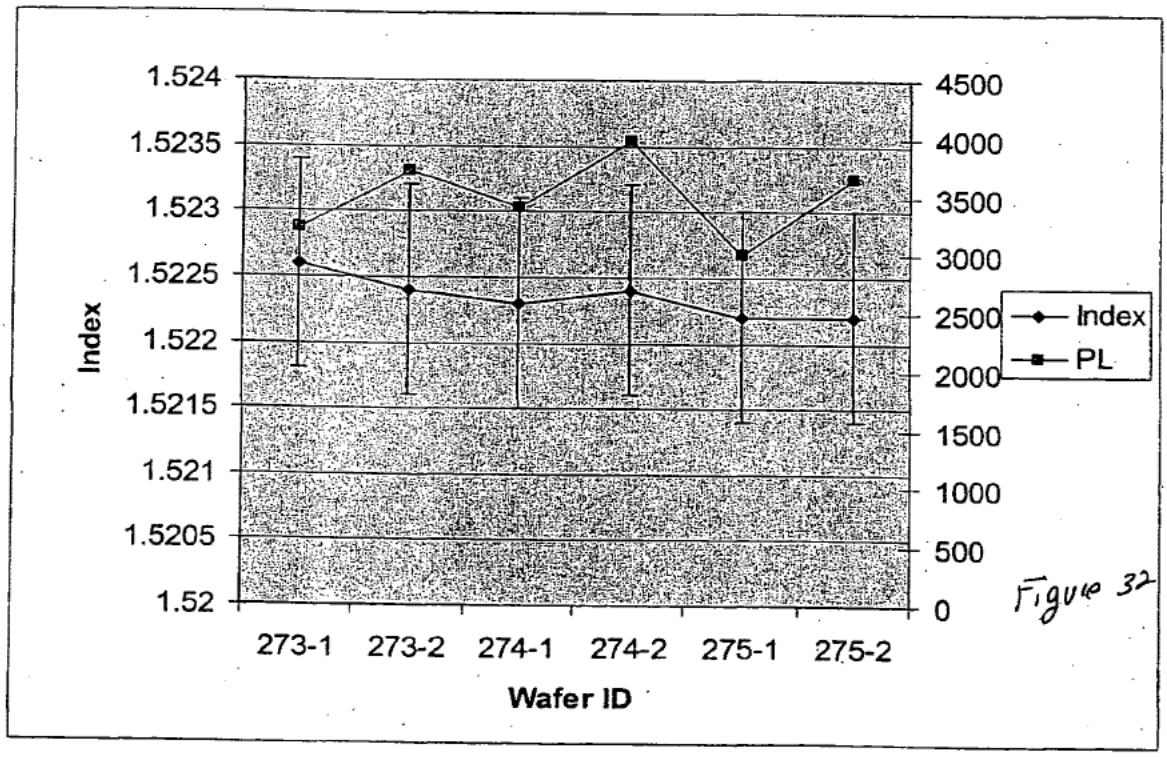

Figure 32

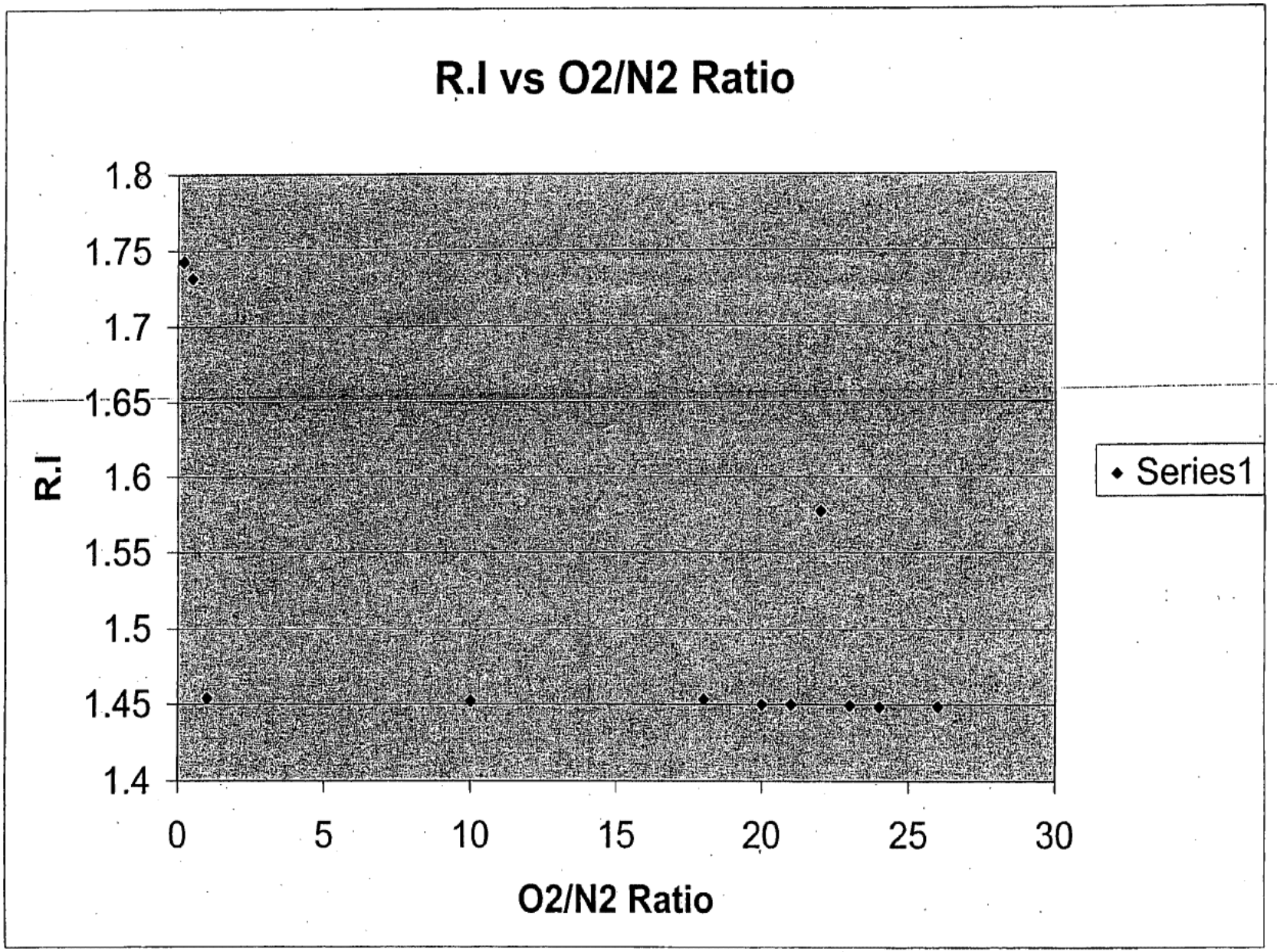

Figure 33

SN 5,402,127

This Page is Inserted by IFW Indexing and Scanning Operations and is not part of the Official Record

BEST AVAILABLE IMAGES

Defective images within this document are accurate representations of the original documents submitted by the applicant.

Defects in the images include but are not limited to the items checked:

- ☐ BLACK BORDERS
- ☐ IMAGE CUT OFF AT TOP, BOTTOM OR SIDES
- ☐ FADED TEXT OR DRAWING
- ☐ BLURRED OR ILLEGIBLE TEXT OR DRAWING
- ☐ SKEWED/SLANTED IMAGES
- ☑ COLOR OR BLACK AND WHITE PHOTOGRAPHS
- ☐ GRAY SCALE DOCUMENTS
- ☑ LINES OR MARKS ON ORIGINAL DOCUMENT
- ☐ REFERENCE(S) OR EXHIBIT(S) SUBMITTED ARE POOR QUALITY
- ☐ OTHER: _____

IMAGES ARE BEST AVAILABLE COPY.
As rescanning these documents will not correct the image problems checked, please do not report these problems to the IFW Image Problem Mailbox.

RECEIVED: 07 07/02
Aug-08-2002 16:58 From-SKJERVEN,MORRILL,LLP +4084537979 T-623 P.006/011 F-572

#3

Attorney Docket No.: M-12245 US

DECLARATION FOR PATENT APPLICATION AND POWER OF ATTORNEY

As a below named inventor, I hereby declare that:

My residence, post office address and citizenship are as stated below adjacent to my name.

I believe I am the original, first and sole inventor (if only one name is listed below) or an original, first and joint inventor (if plural names are listed below) of subject matter (process, machine, manufacture, or composition of matter, or an improvement thereof) which is claimed and for which a patent is sought by way of the application entitled

Biased Pulse DC Reactive Sputtering of Oxide Films

which (check)
- ☐ is attached hereto.
- ☐ and is amended by the Preliminary Amendment attached hereto.
- ☒ was filed on March 16, 2002 as Application Serial No. 10/101,863.
- ☐ and was amended on (if applicable).

I hereby state that I have reviewed and understand the contents of the above identified specification, including the claims, as amended by any amendment referred to above.

I acknowledge the duty to disclose information, which is material to patentability as defined in Title 37, Code of Federal Regulations, § 1.56.

I hereby claim foreign priority benefits under Title 35, United States Code, § 119(a)-(d) of any foreign application(s) for patent or inventor's certificate or any PCT international application(s) designating at least one country other than the United States of America listed below and have also identified below any foreign application(s) for patent or inventor's certificate or any PCT international application(s) designating at least one country other than the United States of America filed by me on the same subject matter having a filing date before that of the application(s) of which priority is claimed:

Prior Foreign Application(s)			Priority Claimed	
Number	Country	Day/Month/Year Filed	Yes	No
N/A			☐	☐

I hereby claim the benefit under Title 35, United States Code, § 119(e) of any United States provisional application(s) listed below:

Provisional Application Number	Filing Date
N/A	

I hereby claim the benefit under Title 35, United States Code, § 120 of any United States application(s) or PCT international application(s) designating the United States of America listed below and, insofar as the subject matter of each of the claims of this application is not disclosed in the prior application(s) in the manner provided by the first paragraph of Title 35, United States Code, § 112, I acknowledge the duty to disclose information, which is material to patentability as defined in Title 37, Code of Federal Regulations, § 1.56, which became available between the filing date of the prior application(s) and the national or PCT international filing date of this application:

Application Serial No.	Filing Date	Status (patented, pending, abandoned)
N/A		

Aug-08-2002 16:54 From-SKJERVEN,MORRILL,LLP +4084597979 T-628 P.007/011 F-372

Attorney Docket No.: M-12245 US

I hereby appoint the following practitioners to prosecute this application and to transact all business in the United States Patent and Trademark Office connected therewith:

Customer Number 24251

Please direct all telephone calls to:

Gary J. Edwards

Telephone: 408-453-9200

I declare that all statements made herein of my own knowledge are true, all statements made herein on information and belief are believed to be true, and all statements made herein are made with the knowledge that whoever, in any matter within the jurisdiction of the Patent and Trademark Office, knowingly and willfully falsifies, conceals, or covers up by any trick, scheme, or device a material fact, or makes any false, fictitious or fraudulent statements or representations, or makes or uses any false writing or document knowing the same to contain any false, fictitious or fraudulent statement or entry, shall be subject to the penalties including fine or imprisonment or both as set forth under 18 U.S.C. 100 . and that violations of this paragraph may jeopardize the validity of the application or this document, or the validity or enforceability of any patent, trademark registration, or certificate resulting therefrom.

Full name of first joint inventor: Hongmei Zhang
Inventor's Signature: Date: 08/08/02
Residence: San Jose, California
Post Office Address: 1330 Rodney Drive, San Jose, California 95118
Citizenship: People of Republic China

Full name of second joint inventor: Mukundan Narasimhan
Inventor's Signature: Date: 08/08/02
Residence: San Jose, California
Post Office Address: 293 Bluefield Drive, San Jose, California 95136
Citizenship:

Full name of third joint inventor: Ravi B. Mullapudi
Inventor's Signature: Date: 08/08/02
Residence: San Jose, California
Post Office Address: 2117 Shiangzone Court, San Jose, California 95121
Citizenship: India

Full name of fourth joint inventor: Richard E. Demaray
Inventor's Signature: Date: 8/8/02
Residence: Portola Valley, California
Post Office Address: 190 Fawn Lane, Portola Valley, California 94028
Citizenship: USA

41

PATENT
Customer No. 22,852
Attorney Docket No. 09140.0016
(formerly M-12245 US)

IN THE UNITED STATES PATENT AND TRADEMARK OFFICE

In re Application of:	)
	)
Zhang, et al.	) Group Art Unit: 2816
	)
Application No.: 10/101,863	) Examiner: Unassigned
	)
Filed: March 16, 2002	)
	)
For: BIASED PULSE DC REACTIVE SPUTTERING OF OXIDE FILMS	)
	)

Commissioner for Patents
Washington, DC 20231

Sir:

REVOCATION OF POWER OF ATTORNEY
AND GRANT OF NEW POWER OF ATTORNEY

The undersigned, a representative authorized to sign on behalf of the Assignee owning all of the interest in this patent, hereby revokes all previous powers of attorney or authorization of agent granted in this application before the date of execution hereof. The undersigned verifies that Symmorphix, Inc. is the Assignee of the entire right, title, and interest in the patent application identified above by virtue of the attached assignment document, which is being concurrently filed for recordation. The undersigned certifies that the evidentiary documents have been reviewed and to the best of the undersigned's knowledge and belief, title is in the Assignee Symmorphix, Inc.

The undersigned hereby grants its power of attorney to **FINNEGAN, HENDERSON, FARABOW, GARRETT & DUNNER, L.L.P.**, Douglas B. Henderson, Reg. No. 20,291; Ford F. Farabow, Jr., Reg. No. 20,630; Arthur S. Garrett, Reg. No. 20,338; Donald R. Dunner, Reg. No. 19,073; Brian G. Brunsvold, Reg. No. 22,593; Tipton D. Jennings, IV, Reg. No. 20,645; Jerry D. Voight, Reg. No. 23,020; Laurence R. Hefter, Reg. No. 20,827; Kenneth E. Payne, Reg. No. 23,098; Herbert H. Mintz, Reg. No. 26,691; C. Larry O'Rourke, Reg. No. 26,014; Albert J. Santorelli, Reg. No. 22,610; Michael C. Elmer, Reg. No. 25,857; Richard H. Smith, Reg. No. 20,609; Stephen L. Peterson, Reg. No. 26,325; John M. Romary, Reg. No. 26,331; Bruce C. Zotter, Reg. No. 27,680; Dennis P. O'Reilley, Reg. No. 27,932; Allen M. Sokal, Reg. No. 26,695; Robert D. Bajefsky, Reg. No. 25,387; Richard L. Stroup, Reg. No. 28,478; David W. Hill, Reg. No. 28,220; Thomas L. Irving, Reg. No. 28,619; Charles E. Lipsey, Reg. No. 28,165; Thomas W. Winland, Reg. No. 27,605; Basil J. Lewris, Reg. No. 28,818; Martin I. Fuchs, Reg. No. 28,508; E. Robert Yoches, Reg. No. 30,120; Barry W. Graham, Reg. No. 29,924; Susan Haberman Griffen, Reg. No. 30,907; Richard B. Racine, Reg. No. 30,415; Thomas H. Jenkins, Reg. No. 30,857; Robert E. Converse, Jr., Reg. No. 27,432; Clair X. Mullen, Jr., Reg. No. 20,348; Christopher P. Foley, Reg. No. 31,354; Roger D. Taylor, Reg. No. 28,992; John C. Paul, Reg. No. 30,413; David M. Kelly, Reg. No. 30,953; Kenneth J. Meyers, Reg. No. 25,146; Carol P. Einaudi, Reg. No. 32,220; Walter Y. Boyd, Jr., Reg. No. 31,738; Steven M. Anzalone, Reg. No. 32,095; Jean B. Fordis, Reg. No. 32,984; Barbara C. McCurdy, Reg. No. 32,120; James K. Hammond, Reg. No. 31,964; Richard V. Burgujian, Reg. No. 31,744; J. Michael Jakes, Reg. No. 32,824; Thomas W. Banks, Reg. No. 32,719; Christopher P. Isaac, Reg. No. 32,616; Bryan C. Diner, Reg. No. 32,409; M. Paul Barker, Reg. No. 32,013; Andrew Chanho Sonu, Reg. No. 33,457; David S. Forman, Reg. No. 33,694; Vincent P. Kovalick, Reg. No. 32,867; James W.

Edmondson, Reg. No. 33,871; Michael R. McGurk, Reg. No. 32,045; Joann M. Neth, Reg. No. 36,363; Gerson S. Panitch, Reg. No. 33,751; Cheri M. Taylor, Reg. No. 33,216; Charles E. Van Horn, Reg. No. 40,266; Linda A. Wadler, Reg. No. 33,218; Jeffrey A. Berkowitz, Reg. No. 36,743; Michael R. Kelly, Reg. No. 33, 921; James B. Monroe, Reg. No. 33,971; Doris Johnson Hines, Reg. No. 34,629; Lori Ann Johnson, Reg. No. 34,498; R. Bruce Bower, Reg. No. 37,099; John Rissman, Reg. No. 33,764; Therese A. Hendricks, Reg. No. 30,389; Leslie I. Bookoff, Reg. No. 38,084; Michele C. Bosch, Reg. No. 40,524; Michael J. Flibbert, Reg. No. 33,234; Scott A. Herbst, Reg. No. 35,189; Leslie A. McDonell, Reg. No. 34,872; Thalia V. Warnement, Reg. No. 39,064; Ronald A. Bleeker, Reg. No. 27,773; Kathleen A. Daley, Reg. No. 36,116; C. Gregory Gramenopoulos, Reg. No. 36,532; Anthony M. Gutowski, Reg. No. 38,742; Yitai Hu, Reg. No. 40,653; Lionel M. Lavenue; Reg. No. 46,859; Christine E. Lehman, Reg. No. 38,535; and Gary J. Edwards, Reg. No. 41,008; both jointly and separately as their attorneys with full power of substitution and revocation to prosecute this application and to transact all business in the Patent and Trademark Office connected therewith, and to receive the Letters Patent.

Please send all future correspondence concerning this application to Finnegan, Henderson, Farabow, Garrett & Dunner, L.L.P. at the following address:

Finnegan, Henderson, Farabow,
Garrett & Dunner, L.L.P.
1300 I Street, N.W.
Washington, D.C. 20005-3315

Dated: Nov 18, 2003

By: Richard E. Demaray
Name: Richard E. Demaray
Title: Chief Technical Officer
Symmorphix, Inc.

PATENT APPLICATION FEE DETERMINATION RECORD
Effective October 1, 2004

Application or Docket Number: 10954182

CLAIMS AS FILED - PART I

	(Column 1)	(Column 2)
TOTAL CLAIMS	45	
FOR	NUMBER FILED	NUMBER EXTRA
TOTAL CHARGEABLE CLAIMS	45 minus 20=	* 25
INDEPENDENT CLAIMS	2 minus 3 =	*
MULTIPLE DEPENDENT CLAIM PRESENT		☐

* If the difference in column 1 is less than zero, enter "0" in column 2

SMALL ENTITY TYPE ☐		OR	OTHER THAN SMALL ENTITY	
RATE	FEE		RATE	FEE
BASIC FEE	395.00	OR	BASIC FEE	790.00
X$ 9=		OR	X$18=	450
X44=		OR	X88=	
+150=		OR	+300=	
TOTAL		OR	TOTAL	1240

CLAIMS AS AMENDED - PART II

AMENDMENT A

	(Column 1) CLAIMS REMAINING AFTER AMENDMENT		(Column 2) HIGHEST NUMBER PREVIOUSLY PAID FOR	(Column 3) PRESENT EXTRA
Total	*	Minus	**	=
Independent	*	Minus	***	=
FIRST PRESENTATION OF MULTIPLE DEPENDENT CLAIM				☐

SMALL ENTITY		OR	OTHER THAN SMALL ENTITY	
RATE	ADDITIONAL FEE		RATE	ADDITIONAL FEE
X$ 9=		OR	X$18=	
X44=		OR	X88=	
+150=		OR	+300=	
TOTAL ADDIT. FEE		OR	TOTAL ADDIT. FEE	

AMENDMENT B

	(Column 1) CLAIMS REMAINING AFTER AMENDMENT		(Column 2) HIGHEST NUMBER PREVIOUSLY PAID FOR	(Column 3) PRESENT EXTRA
Total	*	Minus	**	=
Independent	*	Minus	***	=
FIRST PRESENTATION OF MULTIPLE DEPENDENT CLAIM				☐

RATE	ADDITIONAL FEE		RATE	ADDITIONAL FEE
X$ 9=		OR	X$18=	
X44=		OR	X88=	
+150=		OR	+300=	
TOTAL ADDIT. FEE		OR	TOTAL ADDIT. FEE	

AMENDMENT C

	(Column 1) CLAIMS REMAINING AFTER AMENDMENT		(Column 2) HIGHEST NUMBER PREVIOUSLY PAID FOR	(Column 3) PRESENT EXTRA
Total	*	Minus	**	=
Independent	*	Minus	***	=
FIRST PRESENTATION OF MULTIPLE DEPENDENT CLAIM				☐

RATE	ADDITIONAL FEE		RATE	ADDITIONAL FEE
X$ 9=		OR	X$18=	
X44=		OR	X88=	
+150=		OR	+300=	
TOTAL ADDIT. FEE		OR	TOTAL ADDIT. FEE	

* If the entry in column 1 is less than the entry in column 2, write "0" in column 3.
** If the "Highest Number Previously Paid For" IN THIS SPACE is less than 20, enter "20."
***If the "Highest Number Previously Paid For" IN THIS SPACE is less than 3, enter "3."
The "Highest Number Previously Paid For" (Total or Independent) is the highest number found in the appropriate box in column 1.

PATENT APPLICATION SERIAL NO. _____

U.S. DEPARTMENT OF COMMERCE
PATENT AND TRADEMARK OFFICE
FEE RECORD SHEET

10/04/2004 AOSMAN1 00000075 10954182

01 FC:1001 790.00 OP
02 FC:1202 450.00 OP

PTO-1556
(5/87)

*U.S. Government Printing Office: 2002 — 460-267/60033

PATENT
Customer No. 22,852
Attorney Docket No. 09140-0016-01000

IN THE UNITED STATES PATENT AND TRADEMARK OFFICE

In re Application of:	)
	)
Zhang et al.	) Group Art Unit: Not Yet Assigned
	)
Continuation of Application No.: 10/101,863	) Examiner: Not Yet Assigned
	)
Filed: October 1, 2004	)
	) Confirmation No.: Not Yet Assigned
For: BIASED PULSE DC REACTIVE SPUTTERING OF OXIDE FILMS	)

Commissioner for Patents
P.O. Box 1450
Alexandria, VA 22313-1450

Sir:

PRELIMINARY AMENDMENT

Prior to the examination of the above application, please amend this application as follows:

Amendments to the Specification are included in this paper.

Amendments to the Claims are reflected in the listing of claims in this paper.

Remarks/Arguments follow the amendment sections of this paper.

AMENDMENTS TO THE SPECIFICATION:

Please amend the specification as follows:

Please amend this application on page 1, line 1, by inserting the following new paragraph:

This is a continuation of Application No. 10/101,863, filed March 16, 2002 which is incorporated herein by reference.

Please amend paragraph **[0048]** as indicated below:

[0048] RF sputtering of oxide films is discussed in Application Serial No. 09/903,050 (the '050 application) (now U.S. Patent No. 6,506,289) by Demaray et al., entitled "Planar Optical Devices and Methods for Their Manufacture," assigned to the same assignee as is the present invention, herein incorporated by reference in its entirety. Further, targets that can be utilized in a reactor according to the present invention are discussed in U.S. Application serial no. ~~{Attorney Docket No. M-12247 US} (the '247 application)~~ 10/101,341 (the '341 application), filed concurrently with the present disclosure, assigned to the same assignee as is the present invention, herein incorporated by reference in its entirety. A gain-flattened amplifier formed of films deposited according to the present invention are described in U.S. Application serial no. ~~{Attorney Docket No. M-12652 US} (the '652 application)~~ 10/101,493 (the '493 application), filed concurrently with the present disclosure, assigned to the same assignee as is the present invention, herein incorporated by reference in its entirety. Further, a mode size converter formed with films deposited according to the present invention is described in U.S. Application serial no. ~~{Attorney Docket No. M-12138 US} (the '138 application)~~ 10/101,492 (the '492 application), filed concurrently with the present disclosure, assigned to the same assignee as is the present invention, herein incorporated by reference in its entirety.

Please amend paragraph **[0060]** as indicated below:

[0060] Target 12 can be formed of any materials, but is typically metallic materials such as, for example, combinations of Al and Si. Therefore, in some embodiments, target 12 includes a metallic target material formed from ~~intermetalic~~ intermetallic compounds of optical elements such as Si, Al, Er and Yb. Additionally, target 12 can be formed, for example, from materials such as La, Yt, Ag, Au, and Eu. To form optically active films on substrate 16, target 12 can include rare-earth ions. In some embodiments of target 12 with rare earth ions, the rare earth ions can be pre-alloyed with the metallic host components to form ~~intermetalics~~ intermetallics. ~~*See* the '247 application.~~ *See* the '341 application.

Please amend paragraph **[0062]** as indicated below:

[0062] Several useful examples of target 12 that can be utilized in apparatus 10 according to the present invention include the following targets compositions: (Si/Al/Er/Yb) being about (57.0/41.4/0.8/0.8), (48.9/49/1.6/0.5), (92/8/0/0), (60/40/0/0), (50/50/0/0), (65/35/0/0), (70/30/0,0), and (50,48.5/1.5/0) cat. %, to list only a few. These targets can be referred to as the 0.8/0.8 target, the 1.6/.5 target, the 92-8 target, the 60-40 target, the 50-50 target, the 65-35 target, the 70-30 target, and the 1.5/0 target, respectively. The 0.8/0.8, 1.6/0.5, and 1.5/0 targets can be made by pre-alloyed targets formed from an atomization and hot-isostatic pressing (HIPing) process as described in ~~the '247 application~~ the '341 application. The remaining targets can be formed, for example, by HIPing. Targets formed from Si, Al, Er and Yb can have any composition. In some embodiments, the rare earth content can be up to 10 cat. % of the total ion content in the target. Rare earth ions are added to form active layers for amplification. Targets utilized in apparatus 10 can have any composition and can include ions other than Si, Al, Er and Yb, including: Zn, Ga, Ge, P, As, Sn, Sb, Pb, Ag, Au, and rare earths: Ce, Pr, Nd, Pm, Sm, Eu, Gd, Tb, Dy Ho, Er, Tm Yb and Lu.

Please amend paragraph **[0084]** as indicated below:

[0084] Figure 5 shows the voltage on target 12 of an embodiment of apparatus 10 according to the present invention as a function of process gas constitution. In the example illustrated in Figure 5, for example, a metallic target with composition .8 cat. % Er, .8 cat. % Yb, 57.4 cat. % Si and 41 cat. % Si, which can be formed as described in ~~the '247 application~~ the '341

application, was sputtered in an embodiment of apparatus 10 based on the AKT-1600 PVD system with 6 kW of pulsed DC power at a frequency of 120 kHz and a reverse time of 2.3 micro seconds. The Argon gas flow was set at 60 sccm and the Oxygen gas flow was varied from zero up to 40 sccm. For more details regarding this deposition, see Example 1 below.

Please amend paragraph **[0112]** as indicated below:

[0112] An AKT 1600 based reactor can be utilized to deposit a film. In this example, a wide area metallic target of dimension 550X 650 mm with composition (Si/Al/Er/Yb) being about 57.0 cat. % Si, 41.4 cat. % Al, 0.8 cat. % Er, and 0.8 cat. % Yb (a ".8/.8" target) was fabricated as described in ~~the '247 patent~~ the '341 application.

Please amend paragraph **[0119]** as indicated below:

[0119] A waveguide amplifier can be deposited according to the present invention. An embodiment of target 12 having composition 57.4 cat. % Si, 41.0 cat. % Al, 0.8 cat. % Er 0.8 cat. % Yb (the ".8/.8 target") can be formed as disclosed in ~~the '245 application~~ the '341 application. The Er-Yb (0.8/0.8) co-doped Alumino-Silicate film was deposited onto a 6 inch wafer of substrate 16 which includes a 10 μm thick thermal oxide substrate, which can be purchased from companies such as Silicon Quest International, Santa Clara, CA. Target 12 was first cleaned by sputtering with Ar (80 sccm) only in the metallic mode. Target 12 was then conditioned in poison mode by flowing 60 sccm of Argon and 40 sccm of oxygen respectively. The power supplied to target 12 during conditioning was kept at about 6 kW.

Please amend paragraph **[0123]** as indicated below:

[0123] This example describes production of a dual core Erbium/Yttrbium co-doped amplifier according to the present invention. In one example, substrate 16 is a silicon substrate with an undercladding layer of thermally oxidized SiO_2 of about 15 μm thick. Substrate 16 with the thermal oxide layer can be purchased from companies such as Silicon Quest International, Santa Clara, CA. A layer of active core material is then deposited on substrate 16 with a Shadow Mask as described in ~~the '138 application~~ the '492 application. Use of a shadow mask results in a

vertical taper on each side of a finished waveguide which greatly enhances the coupling of light into and out of the waveguide.

Please amend paragraph **[0128]** as indicated below:

[0128] A reverse taper mode size converter, *see* ~~the '138 application~~ the '492 application, is utilized for coupling light into waveguide amplifier 300. The insertion loss at 1310 nm is about 2 dB. Figure 26 shows the amplifier performance of this example. In Figure 26, amplifier 300 is pumped with 150 mW from one side pumping with 984 nm light. Gain flattening is achieved within about 1 dB in the range 1528 nm to 1562 nm for small input signals (-20 dBm). For large input signals (0 dBm), gain flattening is also achieved within about 1 dB.

Please amend paragraph **[0136]** as indicated below:

[0136] This example describes the fabrication of another Er-Yb codoped waveguide amplifier according to the present invention. The active core is deposited with an embodiment of target 12 with composition about **49 cat. % Si, 48 cat. % Al, 1.6 cat. % Er and 0.5 cat. % Yb**, which can be fabricated as described in ~~the '247 application~~ the '341 application. Target 12 was first cleaned by sputtering with Ar (80 sccm) only in the metallic mode. Target 12 was then conditioned in poison mode by flowing 60 sccm of Argon and 40 sccm of oxygen respectively. The pulsed DC power supplied to target 12 was kept at 5 kW. Table 4 shows photoluminescence and index of refraction of as-deposited films from this example at some typical process conditions. The units for photoluminescence are the number of counts per micron. Lifetime and photoluminescence measured after annealing at various different temperatures are shown in Table 5.

AMENDMENTS TO THE CLAIMS:

This listing of claims will replace all prior versions and listings of claims in the application:

Claim 1-39 (Canceled).

Claim 40 (New): A method of depositing a film on a substrate, comprising:

providing process gas between the target and a substrate;

providing pulsed DC power to a target;

providing a magnetic field to the target; and

wherein a material is deposited on the substrate.

Claim 41 (New): The method of claim 40, wherein the target is a metallic target and the process gas includes oxygen.

Claim 42 (New): The method of claim 40, wherein the target is a metallic target and the process gas includes one or more of a set consisting of N_2, NH_3, CO, NO, CO_2, halide containing gasses.

Claim 43 (New): The method of claim 40, wherein the target is a ceramic target.

Claim 44 (New): The method of claim 40, further including providing filtering of pulsed DC power to the target in order to protect a pulsed DC power supply.

Claim 45 (New): The method of claim 40, wherein the magnetic field is provided by a moving magnetron.

Claim 46 (New) The method of Claim 40, further including holding the temperature of the substrate substantially constant.

Claim 47 (New): The method of Claim 40, wherein the process gas includes a mixture of Oxygen and Argon.

Claim 48 (New): The method of Claim 40, wherein the Oxygen flow is adjusted to adjust the index of refraction of the film.

Claim 49 (New): The method of Claim 40, wherein the process gas further includes nitrogen.

Claim 50 (New): The method of Claim 40, wherein providing pulsed DC power to a target includes providing pulsed DC power to a target which has an area larger than that of the substrate.

Claim 51 (New): The method of Claim 40, further including uniformly sweeping the target with a magnetic field.

Claim 52 (New): The method of Claim 51 wherein uniformly sweeping the target with a magnetic field includes sweeping a magnet in one direction across the target where the magnet extends beyond the target in the opposite direction.

Claim 53 (New): The method of Claim 40, wherein the target is an alloyed target.

Claim 54 (New): The method of Claim 53 wherein the alloyed target includes one or more rare-earth ions.

Claim 55 (New): The method of Claim 53 wherein the alloyed target includes Si and Al.

Claim 56 (New): The method of Claim 53 wherein the alloyed target includes one or more elements taken from a set consisting of Si, Al, Er, Yb, Zn, Ga, Ge, P, As, Sn, Sb, Pb, Ag, Au, Ce, Pr, Nd, Pm, Sm, Eu, Gd, Tb, Dy Ho, Tm, and Lu.

Claim 57 (New): The method of claim 53 wherein the alloyed target is a tiled target.

Claim 58 (New): The method of claim 57 wherein each tile of the tiled target is formed by prealloy atomization and hot isostatic pressing of a powder.

Claim 59 (New): The method of claim 40, wherein the oxide film is formed by reactive sputtering in metallic mode.

Claim 60 (New): The method of claim 40, wherein the oxide film is formed by reactive

sputtering in poison mode.

Claim 61 (New): The method of claim 40, further including reconditioning the metallic target.

Claim 62 (New): The method of claim 61, wherein reconditioning the metallic target includes:

reactive sputtering in the metallic mode and then reactive sputtering in the poison mode.

Claim 63 (New): A reactor according to the present invention, comprising:

a target area for receiving a target;

a magnetic field generator supplying a magnetic field to the target;

a substrate area opposite the target area for receiving a substrate; and

a pulsed DC power supply coupled to the target,

wherein a material is deposited on the substrate when pulsed DC power from the pulsed DC power supply is applied to the target in the presence of a process gas.

Claim 64 (New): The method of claim 63, wherein the target is a metallic target and the process gas includes oxygen.

Claim 65 (New): The method of claim 63, wherein the target is a metallic target and the process gas includes one or more of a set consisting of N_2, NH_3, CO, NO, CO_2, halide containing gasses.

Claim 66 (New): The method of claim 63, wherein the target is a ceramic target.

Claim 67 (New): The method of claim 63, further including providing filtering of pulsed DC power to the target in order to protect a pulsed DC power supply.

Claim 68 (New): The method of claim 63, wherein the magnetic field is provided by a moving magnetron.

Claim 69 (New) The method of Claim 63, further including a temperature controller for holding the temperature of the substrate substantially constant.

Claim 70 (New): The method of Claim 63, wherein the process gas includes a mixture of Oxygen and Argon.

Claim 71 (New): The method of Claim 70, further including a process gas flow controller wherein the Oxygen flow is adjusted to adjust the index of refraction of the film.

Claim 72 (New): The method of Claim 63, wherein the process gas further includes nitrogen.

Claim 73 (New): The method of Claim 63, wherein the target has an area larger than that of the substrate.

Claim 74 (New): The method of Claim 63, wherein the magnetic field generator uniformly sweeps the target with the magnetic field.

Claim 75 (New): The method of Claim 74 wherein when the magnet field is swept in one direction across the target, the magnet field extends beyond the target in the opposite direction.

Claim 76 (New): The method of Claim 63, wherein the target is an alloyed target.

Claim 77 (New): The method of Claim 76 wherein the alloyed target includes one or more rare-earth ions.

Claim 78 (New): The method of Claim 76 wherein the alloyed target includes Si and Al.

Claim 79 (New): The method of Claim 76 wherein the alloyed target includes one or more elements taken from a set consisting of Si, Al, Er, Yb, Zn, Ga, Ge, P, As, Sn, Sb, Pb, Ag, Au, Ce, Pr, Nd, Pm, Sm, Eu, Gd, Tb, Dy Ho, Tm, and Lu.

Claim 80 (New): The method of claim 76 wherein the alloyed target is a tiled target.

Claim 81 (New): The method of claim 80 wherein each tile of the tiled target is formed by prealloy atomization and hot isostatic pressing of a powder.

Claim 82 (New): The method of claim 63, wherein the material is an oxide film formed by reactive sputtering in metallic mode.

Claim 83 (New): The method of claim 63, wherein the material is an oxide film formed by reactive sputtering in poison mode.

Claim 84 (New): The method of claim 63, wherein the target is reconditioned.

REMARKS

Claims 1-39 are cancelled by the present amendment. New claims 40-84 are introduced. Support for this amendment is provided in the specification and drawings as originally filed. No new matter has been introduced by this amendment.

If there is any additional fee due in connection with the filing of this Preliminary Amendment, please charge the fee to our Deposit Account No. 06-0916.

Respectfully submitted,

FINNEGAN, HENDERSON, FARABOW,
GARRETT & DUNNER, L.L.P.

Dated: September 30, 2004

By: _____
Gary J. Edwards
Reg. No. 41,008

PATENT
Customer No. 22,852
Attorney Docket No. 09140-0016-01000

IN THE UNITED STATES PATENT AND TRADEMARK OFFICE

In re Application of:	)	
	)	
H. Zhang, et al.	)	Group Art Unit: Not Yet Assigned
	)	
Continuation of Application No.: 10/101,863	)	Examiner: Not Yet Assigned
	)	
Filed: October 1, 2004	)	Confirmation No.: Not Yet Assigned
	)	
For: BIASED PULSE DC REACTIVE SPUTTERING OF OXIDE FILMS	)	

Mail Stop AMENDMENTS
Commissioner for Patents
P.O. Box 1450
Alexandria, VA 22313-1450

Sir:

INFORMATION DISCLOSURE STATEMENT UNDER 37 C.F.R. § 1.97(b)

Pursuant to 37 C.F.R. §§ 1.56 and 1.97(b), Applicants brings to the attention of the Examiner the documents listed on the attached PTO 1449. This Information Disclosure Statement is being filed within three months of the filing date of the above-referenced application.

Copies of the listed documents were provided in the US Patent Application No. 10/101,863, filed on March 16, 2002, upon which Applicants rely for the benefits provided in 35 U.S.C. §120.

Applicants respectfully request that the Examiner consider the listed documents and indicate that they were considered by making appropriate notations on the attached form.

This submission does not represent that a search has been made or that no better art exists and does not constitute an admission that each or all of the listed documents are material or

constitute "prior art." If the Examiner applies any of the documents as prior art against any claims in the application and Applicants determine that the cited documents do not constitute "prior art" under United States law, Applicants reserve the right to present to the office the relevant facts and law regarding the appropriate status of such documents.

Applicants further reserve the right to take appropriate action to establish the patentability of the disclosed invention over the listed documents, should one or more of the documents be applied against the claims of the present application.

If there is any additional fee due in connection with the filing of this Statement, please charge the fee to our Deposit Account No. 06-0916.

Respectfully submitted,

FINNEGAN, HENDERSON, FARABOW,
GARRETT & DUNNER, L.L.P.

Dated: September 30, 2004

By: Gary J. Edwards
Gary J. Edwards
Reg. No. 41,008

OMB No. 0651-0011

INFORMATION DISCLOSURE CITATION

Atty. Docket No.	09140-0016-01000	Appln. No.	Not Yet Assigned
Applicant	ZHANG et al.		
Filing Date	October 1, 2004	Group:	Not Yet Assigned

U.S. PATENT DOCUMENTS							
Examiner Initial*		Document Number	Issue Date/ Publication Date	Name	Class	Sub Class	Filing Date If Appropriate
		2002/0106297 A1	Aug. 8, 2002	Ueno et al.	419	12	
		2003/0019326 A1	Jan. 30, 2003	Han et al.	45	245	
		2003/0022487 A1	Jan. 30, 2003	Yoon et al.	438	642	
		2003/0042131 A1	Mar. 6, 2003	Johnson	204	192.12	
		2003/0063883 A1	Apr. 3, 2003	Demaray et al.	385	129	
		2003/0077914 A1	Apr. 24, 2003	Le et al.	438	763	
		2003/0079838 A1	May 1, 2003	Brcka	156	345.48	
		2003/0141186 A1	Jul. 31, 2003	Wang et al.	204	298.07	
		2003/0175142 A1	Sep. 18, 2003	Milonopoulou et al.	419	49	
		3,616,403	Oct. 26, 1971	Collins et al.	204	192	
		3,850,604	Nov. 26, 1974	Klein	65	32	
		4,111,523	Sep. 5, 1978	Kaminow et al.	350	96.14	
		4,437,966	Mar. 7, 1961	Hope et al	204	298	
		4,619,680	Oct. 28, 1986	Nourshargh et al.	65	3.12	
		4,915,810	Apr. 10, 1990	Kestigian et al.	204	298.04	
		4,978,437	Dec. 18, 1990	Wirz	204	192.	
		5,174,876	Dec. 29, 1992	Buchal et al.	427	526	
		5,196,041	Mar. 23, 1993	Tumminelli et al.	65	30.1	
		5,200,029	Apr. 6, 1993	Bruce et al.	156	657	
		5,206,925	Apr. 27, 1993	Nakazawa et al.	385	142	
		5,225,288	Jul. 6, 1993	Beeson et al.	428	475.5	

Examiner	Date Considered
*Examiner:	Initial if reference considered, whether or not citation is in conformance with MPEP 609; draw line through citation if not in conformance and not considered. Include copy of this form with next communication to applicant.
Form PTO 1449	Patent and Trademark Office - U.S. Department of Commerce

OMB No. 0651-0011

INFORMATION DISCLOSURE CITATION

Atty. Docket No.	09140-0016-01000	Appln. No.	Not Yet Assigned
Applicant	ZHANG et al.		
Filing Date	October 1, 2004	Group:	Not Yet Assigned

U.S. PATENT DOCUMENTS

Examiner Initial*		Document Number	Issue Date/ Publication Date	Name	Class	Sub Class	Filing Date If Appropriate
		5,237,439	Aug. 17, 1993	Misono et al.	359	74	
		5,252,194	Oct. 12, 1993	Demaray et al.	204	298	
		5,287,427	Feb. 15, 1994	Atkins et al.	385	124	
		5,303,319	Apr. 12, 1994	Ford et al.	385	131	
		5,381,262	Jan. 10, 1995	Arima et al.	359	341	
		5,427,669	Jun. 27, 1995	Drummond	204	298.2	
		5,475,528	Dec. 12, 1995	LaBorde	359	341	
		5,483,613	Jan. 9, 1996	Bruce et al.	385	129	
		5,555,127	Sep. 10, 1996	Abdelkader et al.	359	341	
		5,565,071	Oct. 15, 1996	Demaray et al.	204	192	
		5,603,816	Feb. 18, 1997	Demaray et al.	204	298	
		5,607,560	Mar. 4, 1997	Hirabayashi et al	204	192.15	
		5,613,995	Mar. 25, 1997	Bhandarkar et al.	65	384	
		5,654,054	Aug. 5, 1997	Tropsha et al.	428	36.6	
		5,693,956	Dec. 2, 1997	Shi et al.	257	40	
		5,718,813	Feb. 17, 1998	Drummond	204	192.2	
		5,719,976	Feb. 17, 1998	Henry et al.	385	50	
		5,755,938	May 26, 1998	Fukui et al.	204	298.23	
		5,792,550	Aug. 11, 1998	Phillips et al.	428	336	
		5,830,330	Nov. 3, 1998	Lantsman	204	192.12	
		5,841,931	Nov. 24, 1998	Foresi et al.	385	131	

Examiner	Date Considered

*Examiner: Initial if reference considered, whether or not citation is in conformance with MPEP 609; draw line through citation if not in conformance and not considered. Include copy of this form with next communication to applicant.

Form PTO 1449 Patent and Trademark Office - U.S. Department of Commerce

OMB No. 0651-0011

INFORMATION DISCLOSURE CITATION

Atty. Docket No.	09140-0016-01000	Appln. No.	Not Yet Assigned
Applicant	ZHANG et al.		
Filing Date	October 1, 2004	Group:	Not Yet Assigned

U.S. PATENT DOCUMENTS

Examiner Initial*		Document Number	Issue Date/ Publication Date	Name	Class	Sub Class	Filing Date If Appropriate
		5,847,865	Dec. 8, 1998	Gopinath et al.	359	343	
		5,849,163	Dec. 15, 1998	Ichikawa et al.	204	192.23	
		5,855,744	Jan. 5, 1999	Halsey et al.	204	192	
		5,942,089	Aug. 24, 1999	Sproul et al.	204	192.13	
		5,948,215	Sep. 7, 1999	Lantsman	204	192.12	
		5,961,682	Oct. 5, 1999	Lee et al.	65	384	
		5,977,582	Nov. 2, 1999	Fleming et al.	257	310	
		6,001,224	Dec. 14, 1999	Drummond	204	192.12	
		6,024,844	Feb. 15, 2000	Drummond et al.	204	192.12	
		6,051,114	Apr. 18, 2000	Yao et al.	204	192.3	
		6,057,557	May 2, 2000	Ichikawa	257	59	
		6,093,944	Jul. 25, 2000	VanDover	257	310	
		6,162,709	Dec. 19, 2000	Raux et al.	438	513	
		6,176,986 B1	Jan. 23, 2001	Watanabe et al.	204	298.13	
		6,248,291 B1	Jun. 19, 2001	Nakagama et al.	419	46	
		6,280,585 B1	Aug. 28, 2001	Obinata et al.	204	298.19	
		6,287,986 B1	Sep. 11, 2001	Mihara	438	763	
		6,290,822 B1	Sep. 18, 2001	Fleming et al.	204	192.22	
		6,344,419 B1	Feb. 5, 2002	Forster et al.	438	758	
		6,350,353 B2	Feb. 26, 2002	Gopalraja et al.	204	192.3	
		6,358,810 B1	Mar. 19, 2002	Dornfest et al.	438	396	

Examiner	Date Considered
*Examiner:	Initial if reference considered, whether or not citation is in conformance with MPEP 609; draw line through citation if not in conformance and not considered. Include copy of this form with next communication to applicant.
Form PTO 1449	Patent and Trademark Office - U.S. Department of Commerce

OMB No. 0651-0011

INFORMATION DISCLOSURE CITATION

Atty. Docket No.	09140-0016-01000	Appln. No.	Not Yet Assigned
Applicant	ZHANG et al.		
Filing Date	October 1, 2004	Group:	Not Yet Assigned

U.S. PATENT DOCUMENTS

Examiner Initial*		Document Number	Issue Date/ Publication Date	Name	Class	Sub Class	Filing Date If Appropriate
		6,409,965 B1	Jun. 25, 2002	Nagate et al.	419	26	
		6,413,382 B1	Jul. 2, 2002	Wang et al.	204	192.12	
		6,488,822 B1	Dec. 3, 2002	Moslehi	204	192.12	
		6,511,615 B1	Jan. 28, 2003	Dawes et al.	264	1.21	
		6,537,428 B1	Mar. 25, 2003	Xiong et al.	204	192.13	
		6,563,998 B1	May 13, 2003	Farah et al.	385	131	
		6,605,228 B1	Aug. 12, 2003	Kawaguchi et al.	216	24	
		6,602,338 B1	Aug. 5, 2003	Chen et al.	252	301.4	
		6,615,614 B1	Sep. 9, 2003	Makikawa et al.	65	386	

FOREIGN PATENT DOCUMENTS

		Document Number	Publication Date	Country	Class	Sub Class	Translation Yes or No
		EP 0 820 088	01/21/98	Europe	H 01 J	37/34	
		EP 0 867 985 A1	09/01/98	Europe	H 01 S	3/06	
		JP 6-010127	01/18/94	Japan	C 23 C	14/35	Abstract
		JP 6-100333	12/04/94	Japan	C 03 C	21/00	Abstract
		WO 00/22742	04/01/00	PCT	H O4 B		
		WO 00/36665	06/22/00	PCT	H 01 L	51/20	
		WO 02/12932	02/14/02	PCT	H 01 S	3/16	
		WO 96/23085	08/01/96	PCT	C 23 C	14/34	
		WO 97/35044	09/25/97	PCT	C 23 C	14/40	

Examiner	Date Considered

*Examiner: Initial if reference considered, whether or not citation is in conformance with MPEP 609; draw line through citation if not in conformance and not considered. Include copy of this form with next communication to applicant.

Form PTO 1449 Patent and Trademark Office - U.S. Department of Commerce

OMB No. 0651-0011

INFORMATION DISCLOSURE CITATION

Atty. Docket No.	09140-0016-01000	Appln. No.	Not Yet Assigned
Applicant	ZHANG et al.		
Filing Date	October 1, 2004	Group:	Not Yet Assigned

	OTHER DOCUMENTS (Including Author, Title, Date, Pertinent Pages, Etc.)
	BARBIER, Denis, "Performances and potentioal applications of erbium doped planar waveguide amplifiers and lasers," GeeO, pp. 58-63.
	BELKIND et al., "Using pulsed direct current power for reactive sputtering of Al_2O_3," *J. Vac. Sci. Technol.* A 17(4), pp. 1934-40 (Jul. 1999).
	BYER et al., "Nonlinear Optics and Solid-state Lasers," *IEEE Journal on Selected Topics in Quantum Electronics*, Vol. 6, No. 6, pp. 921-929 (Nov. 2000).
	FUJII et al, "1.54 mm photoluminescence of Er^{3+} doped into SiO_2 films containing Si nanocrystals: Evidence for energy transfer from Si nanocrystals for Er^{3+}", *Appl. Phys. Lett.*, 71 (9), pp. 1198-1200 (September, 1997).
	KELLY et al., "Reactive pulsed magnetron sputtering process for alumina films," *J. Vac. Sci. Technol.* A 18(6), pp. 2890-96 (Nov. 2000).
	KELLY et al., "Control of the structure and properties of aluminum oxide coatings deposited by pulsed magnetron sputtering," *J. Vac. Sci. Technol.* A 17(3), pp. 945-953 (May 1999).
	PAN et al., "Planar Er3+-doped aluminosilicate waveguide amplifier with more than 10 dB gain across C-band," Optical Society of America, 3 pages (2000).
	ROBERTS et al., "The Photoluminescence of Erbium-doped Silicon Monoxide," Department of Electronics and Computer Science, 7 pages (June 1996).
	SCHILLER et al. "PVD Coating of Plastic Webs and Sheets with High Rates on Large Areas," European Materials Research Society 1999 Spring Meeting, Strasbourg, France (June 1-4, 1999).
	SHAW et al. "Use of Vapor Deposited Acrlate Coatings to Improve the Barrier Properties of MetallizedFilm," Society of Vacuum Coaters 505/856-7168, 37th Annual Technical Conference Proceedings, pp. 240-244 (1994).
	SHIN et al. "Dielectric and Electrical Properties of Sputter Grown $(Ba,Sr)TiO_3$ Thin Films," *J. Appl. Phys.*, Vol. 86, No. 1, pp. 506-513, (July 1, 1999).
	SHMULOVICH et al., "Recent progress in Erbium-doped waveguide amplifiers," Bell Laboratories, 3 pages (1999).
	TING et al., "Study of planarized sputter-deposited SiO2," *J. Vac. Sci. Technol.*, 15(3) pp. 1105-1112 (May/Jun. 1978).

Examiner	Date Considered
*Examiner:	Initial if reference considered, whether or not citation is in conformance with MPEP 609; draw line through citation if not in conformance and not considered. Include copy of this form with next communication to applicant.
Form PTO 1449	Patent and Trademark Office - U.S. Department of Commerce

OMB No. 0651-0011

INFORMATION DISCLOSURE CITATION

Atty. Docket No.	09140-0016-01000	Appln. No.	Not Yet Assigned
Applicant	ZHANG et al.		
Filing Date	October 1, 2004	Group:	Not Yet Assigned

	OTHER DOCUMENTS (Including Author, Title, Date, Pertinent Pages, Etc.)
	VAN DOVER, R.B. "Amorphous Lanthanide-Doped TiO_x Dielectric Films," *Appl. Phys. Lett.,* Vol. 74, No. 20, pp. 3041-3 (May 17 1999).
	WESTLINDER et al. "Simulation and Dielectric Characterization of Reactive dc Magnetron Cosputtered $(Ta_2O_5)_{1-x}(TiO_2)_x$ Thin Films," *J. Vac. Sci. Technol.* B, Vol 20, No. 3, pp. 855-861 (May/Jun 2002).
	YOSHIKAWA, K. et al., "Spray formed aluminium alloys for sputtering targets," *Power Metallurgy*, Vol. 43, No. 3, pp. 198-99 (2000)
	ZHANG, Hongmei et al. "High Dielectric Strength, High k TiO_2 Films by Pulsed DC, Reactive Sputter Deposition," (2002).

Examiner	Date Considered
*Examiner:	Initial if reference considered, whether or not citation is in conformance with MPEP 609; draw line through citation if not in conformance and not considered. Include copy of this form with next communication to applicant.
Form PTO 1449	Patent and Trademark Office - U.S. Department of Commerce

PATENT APPLICATION FEE DETERMINATION RECORD
Effective October 1, 2004

Application or Docket Number: 10954182

CLAIMS AS FILED - PART I

	(Column 1)	(Column 2)
TOTAL CLAIMS	45	
FOR	NUMBER FILED	NUMBER EXTRA
TOTAL CHARGEABLE CLAIMS	45 minus 20=	* 25
INDEPENDENT CLAIMS	2 minus 3 =	*
MULTIPLE DEPENDENT CLAIM PRESENT		☐

* If the difference in column 1 is less than zero, enter "0" in column 2

SMALL ENTITY TYPE ☐		OR	OTHER THAN SMALL ENTITY	
RATE	FEE		RATE	FEE
BASIC FEE	395.00	OR	BASIC FEE	790.00
X$ 9=		OR	X$18=	450
X44=		OR	X88=	
+150=		OR	+300=	
TOTAL		OR	TOTAL	1240

CLAIMS AS AMENDED - PART II

AMENDMENT A — 10/1/4

	(Column 1) CLAIMS REMAINING AFTER AMENDMENT		(Column 2) HIGHEST NUMBER PREVIOUSLY PAID FOR	(Column 3) PRESENT EXTRA
Total	* 45	Minus	** 45	=
Independent	* 2	Minus	*** 3	=
FIRST PRESENTATION OF MULTIPLE DEPENDENT CLAIM				☐

SMALL ENTITY		OR	OTHER THAN SMALL ENTITY	
RATE	ADDITIONAL FEE		RATE	ADDITIONAL FEE
X$ 9=		OR	X$18=	
X44=		OR	X88=	
+150=		OR	+300=	
TOTAL ADDIT. FEE		OR	TOTAL ADDIT. FEE	

AMENDMENT B

	(Column 1) CLAIMS REMAINING AFTER AMENDMENT		(Column 2) HIGHEST NUMBER PREVIOUSLY PAID FOR	(Column 3) PRESENT EXTRA
Total	*	Minus	**	=
Independent	*	Minus	***	=
FIRST PRESENTATION OF MULTIPLE DEPENDENT CLAIM				☐

RATE	ADDITIONAL FEE		RATE	ADDITIONAL FEE
X$ 9=		OR	X$18=	
X44=		OR	X88=	
+150=		OR	+300=	
TOTAL ADDIT. FEE		OR	TOTAL ADDIT. FEE	

AMENDMENT C

	(Column 1) CLAIMS REMAINING AFTER AMENDMENT		(Column 2) HIGHEST NUMBER PREVIOUSLY PAID FOR	(Column 3) PRESENT EXTRA
Total	*	Minus	**	=
Independent	*	Minus	***	=
FIRST PRESENTATION OF MULTIPLE DEPENDENT CLAIM				☐

RATE	ADDITIONAL FEE		RATE	ADDITIONAL FEE
X$ 9=		OR	X$18=	
X44=		OR	X88=	
+150=		OR	+300=	
TOTAL ADDIT. FEE		OR	TOTAL ADDIT. FEE	

* If the entry in column 1 is less than the entry in column 2, write "0" in column 3.
** If the "Highest Number Previously Paid For" IN THIS SPACE is less than 20, enter "20."
***If the "Highest Number Previously Paid For" IN THIS SPACE is less than 3, enter "3."
The "Highest Number Previously Paid For" (Total or Independent) is the highest number found in the appropriate box in column 1.

BEST AVAILABLE COPY

UNITED STATES PATENT AND TRADEMARK OFFICE

UNITED STATES DEPARTMENT OF COMMERCE
United States Patent and Trademark Office
Address: COMMISSIONER FOR PATENTS
P.O. Box 1450
Alexandria, Virginia 22313-1450
www.uspto.gov

APPLICATION NUMBER	FILING OR 371 (c) DATE	FIRST NAMED APPLICANT	ATTORNEY DOCKET NUMBER
10/954,182	10/01/2004	Hongmei Zhang	09140-0016-01000

CONFIRMATION NO. 9873

FORMALITIES LETTER

OC000000014424073

22852
FINNEGAN, HENDERSON, FARABOW, GARRETT & DUNNER LLP
1300 I STREET, NW
WASHINGTON, DC 20005

Date Mailed: 11/22/2004

NOTICE OF INFORMAL APPLICATION

This application is considered to be informal since it does not comply with the regulations for the reason(s) indicated below. The period within to correct the informalities noted below and avoid abandonment is set in the accompanying Office action.

Items Required To Avoid Processing Delays:

The item(s) indicated below are also required and should be submitted with any reply to this notice to avoid further processing delays.

- A new oath or declaration, identifying this application number is required. The oath or declaration does not comply with 37 CFR 1.63 in that it:
- does not identify the citizenship of each inventor.

Replies should be mailed to: Mail Stop Missing Parts
Commissioner for Patents
P.O. Box 1450
Alexandria VA 22313-1450

A copy of this notice MUST be returned with the reply.

Mulugeta Lesa

Customer Service Center
Initial Patent Examination Division (703) 308-1202

PART 1 - ATTORNEY/APPLICANT COPY

PATENT
Customer No. 22,852
Attorney Docket No. 09140-0016-01000

IN THE UNITED STATES PATENT AND TRADEMARK OFFICE

In re Application of:	
ZHANG et al.	Group Art Unit: 2882
Application No.: 10/954,182	Examiner: Not Yet Assigned
Filed: October 1, 2004	Confirmation No.: 9873
For: BIASED PULSE DC REACTIVE SPUTTERING OF OXIDE FILMS	

Mail Stop AMENDMENTS
Commissioner for Patents
P.O. Box 1450
Alexandria, VA 22313-1450

Sir:

SUPPLEMENTAL INFORMATION DISCLOSURE STATEMENT UNDER 37 C.F.R. § 1.97(b)

Pursuant to 37 C.F.R. §§ 1.56 and 1.97(b), Applicants brings to the attention of the Examiner the documents listed on the attached PTO 1449. This Information Disclosure Statement is being filed within three months of the filing date of the above-referenced application.

These documents include U.S. patents and applications that are possibly related to the pending application by subject matter, as summarized in the chart below. This submission should not be construed, however, as an admission of relatedness.

Attorney Docket Number	U.S. Patent/ Serial No.	U.S./PCT Publication No.	Title	Examiner
09140-0001-00	10/291,179	US 2003/0134054 A1	Low temperature zirconia based thermal barrier layer by PVD	Rodney McDONALD
09140-0002-01	6,506,289	US 2002/0033330 A1	Planar optical devices and methods for their manufacture	Steven H. VERSTEEG
09140-0002-02	6,827,826	US 2003/0127319 A1	Planar optical devices and methods for their manufacture	Steven H. VERSTEEG
09140-0004-00	6,533,907	US 2002/0134671 A1	Method of Producing amorphous silicon for hard mask and waveguide applications	Steven H. VERSTEEG
09140-0014-00	09/903,081	US 2003/0063883 A1	As-deposited planar optical waveguides with low scattering loss and methods for their manufacture	John M. HOFFMANN
09140-0015-00	10/101,492	US 2003/0173208 A1	Mode size converter for a planar waveguide	Steven H. VERSTEEG
09140-0016-00	10/101,863	US 2003/0173207 A1	Biased pulse DC reactive sputtering of oxide films	Michelle ESTRADA
09140-0016-01 (present application)	10/954,182		Biased pulse DC reactive sputtering of oxide films	Not Yet Assigned
09140-0017-00	10/101,341	US 2003/0175142 A1	Rare-earth pre-alloyed PVD targets for dielectric planar applications	Daniel J. JENKINS
09140-0021-00 (abandoned)	10/101,493	US 2003/0174391 A1	Gain flattened optical amplifier	Deandra M. HUGHES
09140-0025-00	10/650,461	US 2004/0105644 A1 WO 2004/021532 A1	Optical Coupling into Highly Uniform Waveguides	Frank G. FONT
09140-0030-00	10/789,953	US 2005/0006768 A1 WO 2004/077519 A2	Dielectric Barrier Films	Not Yet Assigned

Attorney Docket Number	U.S. Patent/ Serial No.	U.S./PCT Publication No.	Title	Examiner
09140-0033-00	10/851,542	US 2004/0259305 A1	Energy Conversion and Storage Devices by Physical Vapor Deposition of Titanium and Titanium Oxides and Sub-Oxides	Not Yet Assigned
09140-0034-00	10/850,968	US 2005/0000794 A1	Transparent Conductive Oxides from a Metallic Target	Not Yet Assigned

Copies of U.S. Patents and U.S. Patent Publications are not provided. Copies of foreign patent documents and non-patent literature documents are included herewith.

Applicants submit copies of Office Actions issued by the U.S. Patent and Trademark Office in the above-listed applications and Applicants' responses to these office actions. Applicants also submit International Search Reports and Written Opinions issued in the Patent Cooperation Treaty applications corresponding to the U.S. Patent Applications listed above.

Applicants respectfully request that the Examiner consider the listed documents and indicate that they were considered by making appropriate notations on the attached form.

This submission does not represent that a search has been made or that no better art exists and does not constitute an admission that each or all of the listed documents are material or constitute "prior art." If the Examiner applies any of the documents as prior art against any claim in the application and Applicants determine that the cited documents do not constitute "prior art" under United States law, Applicants reserve the right to present to the Office the relevant facts and law regarding the appropriate status of such documents.

Applicants further reserve the right to take appropriate action to establish the patentability of the disclosed invention over the listed documents, should one or more of the documents be applied against the claims of the present application.

If there is any fee due in connection with the filing of this Statement, please charge the fee to our Deposit Account No. 06-0916.

Respectfully submitted,

FINNEGAN, HENDERSON, FARABOW,
GARRETT & DUNNER, L.L.P.

Dated: February 9, 2005

By: Gary J. Edwards
Gary J. Edwards
Reg. No. 41,008

IDS Form PTO/SB/08: Substitute for form 1449A/PTO

INFORMATION DISCLOSURE STATEMENT BY APPLICANT

(Use as many sheets as necessary)

Sheet	1	of	9

Complete if Known	
Application Number	10/954,182
Filing Date	October 1, 2004
First Named Inventor	Zhang et al.
Art Unit	2882
Examiner Name	Not Yet Assigned
Attorney Docket Number	09140-0016-01000

U.S. PATENTS AND PUBLISHED U.S. PATENT APPLICATIONS

Examiner Initials*	Cite No.[1]	Document Number Number-Kind Code[2] *(if known)*	Issue or Publication Date MM-DD-YYYY	Name of Patentee or Applicant of Cited Document	Pages, Columns, Lines, Where Relevant Passages or Relevant Figures Appear
		US 2001/0027159 A1	Oct. 4, 2001	Kaneyoshi	
		US 2002/0033330 A1	Mar. 21, 2002	Demaray et al.	
		US 2002/0134671 A1	Jul. 17, 2003	Demaray et al.	
		US 2002/0170821 A1	Nov. 21, 2002	Sandlin et al.	
		US 2003/0097858 A1	May 29, 2003	Strohhofer et al.	
		US 2003/0127319 A1	Jul. 10, 2003	Demaray et al.	
		US 2003/0134054 A1	Jul. 17, 2003	Demaray et al.	
		US 2003/0173207 A1	Sep. 18, 2003	Zhang et al.	
		US 2003/0173208 A1	Sep. 18, 2003	Pan et al.	
		US 2003/0174391 A1	Sep. 18, 2003	Pan et al.	
		US 2004/0105644 A1	Jun. 3, 2004	Dawes	
		US 2004/0259305 A1	Dec. 23, 2004	Demaray et al.	
		US 2005/0000794 A1	Jan. 6, 2005	Demaray et al.	
		US 2005/0006768 A1	Jan. 13, 2005	Narasimhan et al.	
		US 5,085,904	Feb. 4, 1992	Deak et al.	
		US 5,107,538	Apr. 21, 1992	Benton et al.	
		US 5,119,460	Jun. 2, 1992	Bruce et al.	
		US 5,306,569	Apr. 26, 1994	Hiraki	
		US 5,355,089	Oct. 11, 1994	Treger	
		US 5,457,569	Oct. 10, 1995	Liou et al.	
		US 5,499,207	Mar. 12, 1996	Miki et al.	
		US 5,563,979	Oct. 8, 1996	Bruce et al.	
		US 5,591,520	Jan. 7, 1997	Migliorini et al.	
		US 5,607,789	Mar. 4, 1997	Treger et al.	
		US 5,654,984	Aug. 5, 1997	Hershbarger et al.	
		US 5,686,360	Nov. 11, 1997	Harvey, III et al.	
		US 5,689,522	Nov. 18, 1997	Beach	
		US 5,731,661	Mar. 24, 1998	So et al.	
		US 5,757,126	May 26, 1998	Harvey, III et al.	
		US 5,762,768	Jun. 9, 1998	Goy et al.	
		US 5,771,562	Jun. 30, 1998	Harvey, III et al.	

Examiner Signature		Date Considered	

EXAMINER: Initial if reference considered, whether or not citation is in conformance with MPEP 609. Draw line through citation if not in conformance and not considered. Include copy of this form with next communication to applicant.

IDS Form PTO/SB/08: Substitute for form 1449A/PTO

INFORMATION DISCLOSURE STATEMENT BY APPLICANT

(Use as many sheets as necessary)

Sheet	2	of	9

Complete if Known	
Application Number	10/954,182
Filing Date	October 1, 2004
First Named Inventor	Zhang et al.
Art Unit	2882
Examiner Name	Not Yet Assigned
Attorney Docket Number	09140-0016-01000

U.S. PATENTS AND PUBLISHED U.S. PATENT APPLICATIONS

Examiner Initials*	Cite No.[1]	Document Number Number-Kind Code[2] *(if known)*	Issue or Publication Date MM-DD-YYYY	Name of Patentee or Applicant of Cited Document	Pages, Columns, Lines, Where Relevant Passages or Relevant Figures Appear
		US 5,811,177	Sep. 22, 1998	Shi et al.	
		US 5,831,262	Nov. 3, 1998	Greywall et al.	
		US 5,853,830	Dec. 29, 1998	McCaulley et al.	
		US 5,870,273	Feb. 9, 1999	Sogabe et al.	
		US 5,882,946	Mar. 16, 1999	Otani	
		US 5,900,057	May. 4, 1999	Buchal et al.	
		US 5,930,584	Jul. 27, 1999	Sun et al.	
		US 5,952,778	Sep. 14, 1999	Haskal et al.	
		US 5,966,491	Oct. 12, 1999	DiGiovanni	
		US 6,004,660	Dec. 21, 1999	Topolski et al.	
		US 6,046,081	Apr. 4, 2000	Kuo	
		US 6,051,296	Apr. 18, 2000	McCaulley et al.	
		US 6,052,397	Apr. 18, 2000	Jeon et al.	
		US 6,058,233	May 2, 2000	Dragone	
		US 6,071,323	Jun. 6, 2000	Kawaguchi	
		US 6,077,642	Jun. 20, 2000	Ogata et al.	
		US 6,080,643	Jun. 27, 2000	Noguchi et al.	
		US 6,106,933	Aug. 22, 2000	Nagai et al.	
		US 6,146,225	Nov. 14, 2000	Sheats et al.	
		US 6,157,765	Dec. 5, 2000	Bruce et al.	
		US 6,165,566	Dec. 26, 2000	Tropsha	
		US 6,197,167 B1	Mar. 6, 2001	Tanaka	
		US 6,198,217 B1	Mar. 6, 2001	Suzuki et al.	
		US 6,204,111 B1	Mar. 20, 2001	Uemoto et al.	
		US 6,210,544 B1	Apr. 3, 2001	Sasaki	
		US 6,214,660 B1	Apr. 10, 2001	Uemoto et al.	
		US 6,248,640 B1	Jun. 19, 2001	Nam	
		US 6,261,917 B1	Jul. 17, 2001	Quek et al.	
		US 6,300,215 B1	Oct. 9, 2001	Shin	
		US 6,302,939 B1	Oct. 16, 2001	Rabin et al.	
		US 6,365,319 B1	Apr. 2, 2002	Heath et al.	

Examiner Signature		Date Considered	

EXAMINER: Initial if reference considered, whether or not citation is in conformance with MPEP 609. Draw line through citation if not in conformance and not considered. Include copy of this form with next communication to applicant.

IDS Form PTO/SB/08: Substitute for form 1449A/PTO

INFORMATION DISCLOSURE STATEMENT BY APPLICANT

(Use as many sheets as necessary)

Sheet	3	of	9

Complete if Known	
Application Number	10/954,182
Filing Date	October 1, 2004
First Named Inventor	Zhang et al.
Art Unit	2882
Examiner Name	Not Yet Assigned
Attorney Docket Number	09140-0016-01000

U.S. PATENTS AND PUBLISHED U.S. PATENT APPLICATIONS

Examiner Initials*	Cite No.[1]	Document Number Number-Kind Code[2] *(if known)*	Issue or Publication Date MM-DD-YYYY	Name of Patentee or Applicant of Cited Document	Pages, Columns, Lines, Where Relevant Passages or Relevant Figures Appear
		US 6,413,645 B1	Jul. 2, 2002	Graff et al.	
		US 6,416,598 B1	Jul. 9, 2002	Sircar	
		US 6,423,776 B1	Jul. 23, 2002	Akkapeddi et al.	
		US 6,433,380 B2	Aug. 13, 2002	Shin	
		US 6,444,750 B1	Sep. 3, 2002	Touhsaent	
		US 6,506,289 B1	Jan. 14, 2003	Demaray et al.	
		US 6,533,907 B1	Mar. 18, 2003	Demaray et al.	
		US 6,576,546 B2	Jun. 10, 2003	Gilbert et al.	
		US 6,750,156 B2	Jun. 15, 2004	Le et al.	
		US 6,827,826 B1	Dec. 7, 2004	Demaray et al.	

Note: Copies of the U.S. Patent Documents are not Required in IDS filed after October 21, 2004

FOREIGN PATENT DOCUMENTS

Examiner Initials*	Cite No.[1]	Foreign Patent Document Country Code[3] Number[4] Kind Code[5] *(if known)*	Publication Date MM-DD-YYYY	Name of Patentee or Applicant of Cited Document	Pages, Columns, Lines, Where Relevant Passages or Relevant Figures Appear	Translation[6]
		EP 0 510 883 A2	10/28/1992	AT&T		
		EP 1 189 080 A2	03/20/2002	Agere Systems Optoelectronics Guardian Corporation		
		JP 2-054764 A2	02/23/1990	Leybold AG		Abstract
		WO 2004/021532 A1	03/11/2004	Symmorphix, Inc.		
		WO 2004/077519 A2	09/10/2004	Narasimhan et al.		

NON PATENT LITERATURE DOCUMENTS

Examiner Initials*	Cite No.[1]	Include name of the author (in CAPITAL LETTERS), title of the article (when appropriate), title of the item (book, magazine, journal, serial, symposium, catalog, etc.), date, page(s), volume-issue number(s), publisher, city and/or country where published.	Translation[6]
		AFFINITO et al., "PML/oxide/PML Barrier Layer Performance Differences Arising from Use of UV or Electron Beam Polymerization of the PML Layers," *Thin Solid Films* Vol. 308-309, pp. 19-25 (1997)	
		AFFINITO et al., "Polymer-Oxide Transparent Barrier Layers," Society of Vacuum Coaters, 39th Ann. Technical Conference Proceedings, May 5-10, 1996, Philadelphia, PA, pp. 392-397 (1996).	
		ALDER, T. et al., "High-Efficiency Fiber-to-Chip Coupling Using Low-Loss Tapered Single-Mode Fiber," *IEEE Photonics Technology Letters*, 12(8):1016-1018, (2000).	

Examiner Signature		Date Considered	

EXAMINER: Initial if reference considered, whether or not citation is in conformance with MPEP 609. Draw line through citation if not in conformance and not considered. Include copy of this form with next communication to applicant.

IDS Form PTO/SB/08: Substitute for form 1449A/PTO

INFORMATION DISCLOSURE STATEMENT BY APPLICANT

(Use as many sheets as necessary)

Sheet	4	of	9

Complete if Known	
Application Number	10/954,182
Filing Date	October 1, 2004
First Named Inventor	Zhang et al.
Art Unit	2882
Examiner Name	Not Yet Assigned
Attorney Docket Number	09140-0016-01000

NON PATENT LITERATURE DOCUMENTS

Examiner Initials	Cite No.[1]	Include name of the author (in CAPITAL LETTERS), title of the article (when appropriate), title of the item (book, magazine, journal, serial, symposium, catalog, etc.), date, page(s), volume-issue number(s), publisher, city and/or country where published.	Translation[6]
		ALMEIDA, Vilson R. et al., "Nanotaper for compact mode conversion," *Optics Letters*, 28(15):1302-1304, (2003).	
		ASGHARI et al., "ASOC--A Manufacturing Integrated Optics Technology," Part of the SPIE Conference on Integrated Optics Devices III, vol. 3620, pp. 252-262 (Jan. 1999).	
		BARBIER et al, "Amplifying Four-Wavelength Combiner, Based on Erbium/Etterbium-Doped Waveguide Amplifiers and Integrated Splitters", *IEEE PHOTONICS TECHNOLOGY LETTTERS*, Vol. 9, pp 315-317 (1997).	
		BEACH R.J., "Theory and optimization of lens ducts," *Applied Optics*, 35:12:2005-15 (1996).	
		BESTWICK, T., "ASOC silicon integrated optics technology," Part of the SPIE Conferences on Photonics Packaging and Integration, SPIE vol. 3631, pp. 182-190 (Jan. 1999).	
		BORSELLA et al., "Structural incorporation of silver insoda-lime glass by the ion-exchange process: a photoluminescence spectroscopy study", *Applied Physics* A 71, pp. 125-132 (2000).	
		CAMPBELL et al., "Titanium dioxide (TiO_2)-based gate insulators," *IBM J. Res. Develop.* 43(3), 383-391, (May 1999).	
		CHANG, C.Y. (edited by), "ULSI Technology," The McGraw-Hill Companies, Inc., New York, 1996, Chapter 4, pp. 169-170, 226-231 (1996)..	
		CHEN et al. "Development of Supported Bifunctional Electrocatalysts for Unitized Regenerative Fuel Cells," *Journal of the Electrochemical Society*, 149(8), A1092-99, (2002).	
		CHOI et al., "Er-Al-codoped silicate planar light waveguide-type amplifier fabricated by radio-frequency sputtering," *Optics Letters*, vol. 25, No. 4, pp. 263-265 (Feb. 15, 2000).	
		COOKSEY et al. "Predicting Permeability & Transmission Rate for Multilayer Materials," *Foodtechnology*, Vol. 53, No. 9, pp. 60-63 (September 1999).	
		DELAVAUX et al., "Integrated optics erbium ytterbium amplifier system in 10 Gb/s fiber transmission experiment", 22nd European Conference on Optical Communication - ECOC' 96, Oslo, 4 pages (1996).	
		Distiributed Energy Resources: Fuel Cells, Projects, http://www.eere.energy.gov/der/fuel_cells/projects.html (2003).	
		DuPont Teijin Films, Mylar 200 SBL 300, Product Information (2000).	
		Electrometals Technologies Limited, Financial Report for the year 2002, Corporate Directory, Chairman's Review, Review of Operations (2002).	
		E-Tek website: FAQ, Inside E-Tek, E-Tek News, Products; http://www.etek-inc.com/ (2003).	
		FLYTZANIS et al, "nonlinear Optics in Composite Materials," E. Wolf, Progress in Optics XXIX (c) Elsevier Scince Publishers B.V., pp. 323-425 (1991).	
		FRAZAO et al., "EDFA Gain Flattening Using Long-Period Fibre Gratings Based on the Electric Arc Technique," (date unknown).	
		GARCIA, C. "Size Dependence of Lifetime and Absorption Cross Section of Si Nanocrystals Embedded in SiO_2," *Appl. Phys. Lett.*, Vol. 82, No. 10, pp. 1595-7 (March 10, 2003).	
		GOOSSENS et al., "Sensitization of TiO_2 with p-type semiconductor polymers," Delft Interfaculty Research Center, Delft University of Technology Laboratory of Inorganic Chemistry, The Netherlands (1998).	

Examiner Signature		Date Considered	

EXAMINER: Initial if reference considered, whether or not citation is in conformance with MPEP 609. Draw line through citation if not in conformance and not considered. Include copy of this form with next communication to applicant.

IDS Form PTO/SB/08: Substitute for form 1449A/PTO

INFORMATION DISCLOSURE STATEMENT BY APPLICANT

(Use as many sheets as necessary)

Sheet	5	of	9

Complete if Known	
Application Number	10/954,182
Filing Date	October 1, 2004
First Named Inventor	Zhang et al.
Art Unit	2882
Examiner Name	Not Yet Assigned
Attorney Docket Number	09140-0016-01000

NON PATENT LITERATURE DOCUMENTS

Examiner Initials*	Cite No.[1]	Include name of the author (in CAPITAL LETTERS), title of the article (when appropriate), title of the item (book, magazine, journal, serial, symposium, catalog, etc.), date, page(s), volume-issue number(s), publisher, city and/or country where published.	Translation[6]
		HAN, Hak-Seung et al. "Optical Gain at 1.54 □m in Erbium-Doped Silicon Nanocluster Sensitized Wàveguide," *Appl. Phys. Lett.*, Vol. 79, No. 27, pp. 4568-70 (December 31, 2001).	
		HAYAKAWA et al, "Field enhancement effect of small Ag particles on the fluorescence from Eu^{3+}-doped SiO_2 glass", *Appl. Phys. Lett.*, Vol. 74, No 11, pp. 1513-1515 (15 March 1999).	
		HAYAKAWA et al., "Enhanced fluorescence from Eu^{3+} owing to surface plasma oscillation of silver particles in glass", *Journal of Non-Crystalline Solids,* Vol. 259, pp. 16-22 (1999).	
		HAYFIELD, P.C.S., "Development of a New Material-Monolithic Ti4O7 Ebonix Ceramic," Royal Society Chemistry," (2002).	
		HEHLEN et al. "Spectroscopic Properties of Er^{3+} - and Yb^{3+}-doped Soda-Lime Silicate and Aluminosilicate Glasses," *Physical Review B*, Vol. 56, No. 15, pp. 9302-9318 (October 15 1997).	
		HEHLEN et al. "Uniform Upconversion in High-Concentration Er^{3+}-doped Soda Lime Silicate and Aluminosilicate Glasses," *Optics Letters*, Vol. 22, No. 11, pp. 772-774 (June 1, 1997).	
		HORST et al., "Compact, Tunable Optical Devices in Silicon-Oxynitride Wave Guide Technology," IBM Research Division, 3 pages (1999).	
		HUBNER, J. and Guldberg-Kjaer, S., "Planar Er-and Yb-Doped Amplifiers and Lasers," COM Technical University of Denmark, 10.sup.th European Conf. On Integrated Optics, Session WeB2, pp. 71-74 (2001).	
		ITOH, M. et al., "Large reduction of singlemode-fibre coupling loss in 1.5% delta planar lightwave circuits using spot-size converters," *Electronics Letters*, 38(2):72-74 (2002).	
		JACKSON et al. "An Accurate Compact EDFA Model," Dept. of Electrical and Computer Engineering, University of BC (date unknown).	
		JANSSEN et al. "Photoinduced electron transfer from conjugated polymers onto nanocrystalline TiO_2," Eindhoven University of Technology, The Netherlands (date unknown).	
		JOHNSON, J.E. et al., "Monolithically Integrated Semiconductor Optical Amplifier and Electroabsorption Modulator with Dual-Waveguide Spot-Size Converter Input," *IEEE Journal of Selected Topics in Quantum Electronics*, Vol. 6(1) pp. 19-25 (2000).	
		JONSSON L.B. et al. "Frequency response in pulsed DC reactive sputtering processes," *Thin Solid Films,* Vol. 365, pp. 43-48 (2000).	
		KATO et al., "Recent progress on PLC hybrid integration," Part of the SPIE Conference on Optoelectric Integrated Circuits III, SPIE. vol. 3631, pp. 28-36 (Jan. 1999).	
		KATO, Kuniharu et al., "PLC Hybrid Integration Technology and Its Application to Photonic Components," *IEEE Journal of Selected Topics in Quantum Electronics*, Vol. 6(1), pp. 4-13 (2000).	
		KIK, P.G. et al. "Gain Limiting Processes in Er-doped Si Nanocrystal Waveguides in SiO_2," *J. Appl. Phys.*, Vol. 91, No. 1, pp. 534-536 (January 1, 2002).	
		KIM et al. "Frequency-dependent pulsed direct current magnetron sputtering of titanium oxide films," *J. Vac. Sci. Technol.* A 19(2); 429-434 (March 2001).	
		KIM et al. "Mixture Behaviour and Microwave Dielectric Properties in the Low-fired TiO_2-CuO System," *Jpn. J. Appl. Phys.*, 39, 2696-2700, (2000).	

Examiner Signature		Date Considered	

EXAMINER: Initial if reference considered, whether or not citation is in conformance with MPEP 609. Draw line through citation if not in conformance and not considered. Include copy of this form with next communication to applicant.

IDS Form PTO/SB/08: Substitute for form 1449A/PTO				Complete if Known	
INFORMATION DISCLOSURE STATEMENT BY APPLICANT				Application Number	10/954,182
				Filing Date	October 1, 2004
				First Named Inventor	Zhang et al.
				Art Unit	2882
(Use as many sheets as necessary)				Examiner Name	Not Yet Assigned
Sheet	6	of	9	Attorney Docket Number	09140-0016-01000

NON PATENT LITERATURE DOCUMENTS			
Examiner Initials*	Cite No.[1]	Include name of the author (in CAPITAL LETTERS), title of the article (when appropriate), title of the item (book, magazine, journal, serial, symposium, catalog, etc.), date, page(s), volume-issue number(s), publisher, city and/or country where published.	Translation[6]
		LADOUCEUR, F. et al., "Effect of side wall roughness in buried channel waveguides," *IEEE Proc.*, vol. 141, pp. 242-248 (Aug. 1994).	
		LADOUCEUR, F. et al., " 8.8 Evaluation of Results", Silica-based Buried Channel Waveguides and Devices,, *Chapman & Hall, London*, pp. 98-99 (1996).	
		LAMB, William B., "Designing Nonfoil Containing Skins for VIP Applications," DuPont VIA Symposium Presenation, (1999).	
		LAMB, William et al. "Designing Non-Foil Containing Skins for Vacuum InsulationPanel (VIP) Applications," *Vuoto*, Vol. XXVIII, No. 1-2 - Gennaio-Giugno 1999, pp. 55-58 (1999).	
		LANGE et al, "High Gain Ultra-Short Length Phosphate glass Erbium-Doped Fiber Amplifier Material", *OSA Optical Fiber Communications (OFC)*, 3 pages (2002).	
		LAPORTA et al, "Diode-pumped cw bulk Er: Yb: glass laser", *1952 Optics Letters*, Vol. 16, No. 24, 6 pages (Dec. 15, 1991).	
		LAURENT-LUND, C. et al., "PECVD Grown Multiple Core Planar Waveguides with Extremely Low Interface Reflections and Losses," *IEEE Photonics Technology Letters*, Vol. 10, No. 10, pp. 1431-1433 (Oct. 1998).	
		LEE et al., "Effect of size and roughness on light transmission in a S/SiO.sub.2 waveguide: Experiments and model," Department of Materials Science and Engineering, Massachusetts Institute of Technology, (Jul. 12, 2000).	
		LEE et al. "Effects of interfacial layer growth on the electrical characteristics of thin titanium oxide films on silicon," *Applied Physics Letters*, 74(21), 3143-3145, (May 1999).	
		LOVE, J.D. et al., "Quantifying Loss Minimisation in Single-Mode Fibre Tapers," *Electronics Letters*, 22(17):912-914 (1986).	
		MARDARE et al. "On the structure of Titanium Oxide Thin Films," *Analele Stiintifice Ale Universitatii AL. I. Cuza IASI*, Vol. XLV-XLVI, 201-208 (1999).	
		MARQUES, P.V.S. et al., "Planar Silica-on-Silicon Waveguide Lasers Based in Two Layer Core Devices," 10.sup.th European Conference on Integrated Optics, Session WeB2, pp. 79-82 (2001).	
		MEIJERINK et al, LUMINESCENCE OF AG^+ IN CRYSTALLINE AND GLASSY SrB_40_7, *Journal of Physics and Chemistry of Solids*, Vol. 54, No. 8, pp. 901-906, (1993).	
		MESNAOUI et al, "Spectroscopic properties of AG^+ ions in phospage glasses of $NaPO_3$-$AgPO_3$ system", *European Journal Of Solid State And Inorganic Chemistry*, Vol. 29, pages 1001-1013, (1992).	
		MITOMU, O. et al., "Design of a Single-Mode Tapered Waveguide for Low-Loss Chip-to-Fiber Coupling," *IEEE Journal of Quantum Electronics*, 30(8):1787-1793 (1994).	
		MIZUNO et al. "Temperature dependence of oxide decomposition on titanium surfaces in UHV," submitted to Journal of Vacuum Science and Technology, (October 28, 2001).	
		OHKUBO et al., "Polarization-Insensitive Arrayed-Waveguide Grating Using Pure Si)2 Cladding," Fifth Optoelectronics and Communication Conference (OECC 2000) Technical Digest, 2 pages (Jul. 2000).	
		OHMI et al., "Rare earth metal oxides for high-K gate insulator," Tokyo Institute of Technology, (date unknown).	

Examiner Signature		Date Considered	

EXAMINER: Initial if reference considered, whether or not citation is in conformance with MPEP 609. Draw line through citation if not in conformance and not considered. Include copy of this form with next communication to applicant.

IDS Form PTO/SB/08: Substitute for form 1449A/PTO				Complete if Known	
INFORMATION DISCLOSURE STATEMENT BY APPLICANT				*Application Number*	10/954,182
				Filing Date	October 1, 2004
				First Named Inventor	Zhang et al.
				Art Unit	2882
(Use as many sheets as necessary)				*Examiner Name*	Not Yet Assigned
Sheet	7	of	9	*Attorney Docket Number*	09140-0016-01000

NON PATENT LITERATURE DOCUMENTS			
Examiner Initials*	Cite No.[1]	Include name of the author (in CAPITAL LETTERS), title of the article (when appropriate), title of the item (book, magazine, journal, serial, symposium, catalog, etc.), date, page(s), volume-issue number(s), publisher, city and/or country where published.	Translation[6]
		OHTSUKI et al., "Gain Characteristics of a high concentration Er^{3+}-doped phosphate glass waveguide", *J. Appl. Phys.* 78(6), pp. 3617-3621 (1995).	
		ONO et al., "Design of a Low-loss Y-branch Optical Waveguide," Fifth Optoelectronic and Communications Conference (OECC 2000) Technical Digest, 2 pages (Jul. 2000).	
		PADMINI et al. "Realization of High Tunability Barium Strontium Titanate Thin Films by RF Magnetron Sputtering," College of Engineering, University of California, Santa Barbara (date unknown).	
		PETERS et al., "Formation mechanism of silver nanocrystals made by ion irradiation of Na^{+}--Ag^{+} ion-exchanged sodalime silicate glass", *Nuclear Instruments and Methods in Physics Research B* 168, pp. 237-244 (2000).	
		RAJARAJAN, M. et al., "Numerical Study of Spot-Zise Expanders for an Efficient OEIC to SMF Coupling," *IEEE Photonics Technology Letters*, 10(8):1082-1084 (1998).	
		RAMASWAMY et al., "Ion-Exchanged Glass Waveguides: A Review", *Journal of Lightwave Technology*, Vol. 6, No. 6, pp. 984-1001 (1988).	
		Sanyo Vacuum Industries Co., Ltd. Products Info, TiO_2, http://www.sanyovac.co.jp/Englishweb/products/ETiO2.htm (2003).	
		SCHERMER, R. et al., "Investigation of Mesa Dielectric Waveguides,", Proceedings of the OSA Integrated Photonics Research Topical Meeting and Exhibit, Paper No. IWB3 (Jun 2001).	
		Second International Symposium of Polymer Surface Modification: Relevance to Adhesion, Preliminary Program (1999).	
		Seventh International Conference on TiO_2 Photocatalysis: Fundamentals & Applications, Toronto, Ontario, Canada, Final Program (November 17-21, 2002)	
		SEWELL, P. et al., "Rib Waveguide Spot-Size Transformers: Modal Properties," *Journal of Lightwave Technology*, 17(5):848-856 (1999).	
		SLOOFF et al, "Optical properties of Erbium-doped organic polydentate cage complexes", J. Appl. Phys. 83, pp. 497-503 (Jan. 1998).	
		SMITH, R.E., "Reduced Coupling Loss Using a Tapered-Rib Adiabatic-Following Fiber Coupler," *IEEE Photonics Technology Letters*, 8(8):1052-1054 (1996).	
		STROHHOFER, et al. "Energy transfer to Er^{3+}in Ag ion-exchanged glass", FOM Institute for Atomic and Molecular Physics, 10 pages (date unknown).	
		SUGIYAMA et al., "Gas Permeation Through the Pinholes of Plastic Film Laminated with Aluminium Foil," *Vuoto,* Vol. XXVIII, N. 1-2 - Gennaio-Guigno (1999).	
		TERVONEN, A., "Challenges and opportunities for integrated optics in optical networks," Part of the SPIE Conference in Integrated Optics Devices III, SPIE vol. 3620, pp. 2-11 (Jan. 1999).	
		TREICHEL et al., "The influence of pulsed magnetron sputtering on topography and crystallinity of TiO2 films on glass," *Space and Coatings Technology*, Vol. 123, pp. 268-272 (2000).	
		VILJANEN et al, "Planar Optical Coupling Elements for Multimode Fibers with Two-Step Ion Migration Process", *Applied Physics*, 24, No. 1, pp. 61-63 (January 1981).	
		VILLEGAS et al, "Optical spectroscopy ofa soda lime glass exchanged with silver", *Physics and Chemistry of Glasses* 37(6), pp. 248-253 (1996).	

Examiner Signature		Date Considered	

EXAMINER: Initial if reference considered, whether or not citation is in conformance with MPEP 609. Draw line through citation if not in conformance and not considered. Include copy of this form with next communication to applicant.

IDS Form PTO/SB/08: Substitute for form 1449A/PTO

INFORMATION DISCLOSURE STATEMENT BY APPLICANT

(Use as many sheets as necessary)

Sheet	8	of	9

Complete if Known	
Application Number	10/954,182
Filing Date	October 1, 2004
First Named Inventor	Zhang et al.
Art Unit	2882
Examiner Name	Not Yet Assigned
Attorney Docket Number	09140-0016-01000

NON PATENT LITERATURE DOCUMENTS

Examiner Initials*	Cite No.[1]	Include name of the author (in CAPITAL LETTERS), title of the article (when appropriate), title of the item (book, magazine, journal, serial, symposium, catalog, etc.), date, page(s), volume-issue number(s), publisher, city and/or country where published.	Translation[6]
		VON ROTTKAY et al. "Influence of stoichiometry on electrochromic cerium-titanium oxide compounds," Lawrence Berkeley National Laboratory, UC Berkeley, CA, (date unknown).	
		WESTLINDER et al. "Simulation and Dielectric Characterization of Reactive dc Magnetron Cosputtered $(Ta_2O_5)_{1-x}(TiO_2)_x$ Thin Films," *J. Vac. Sci. Technol. B*, Vol 20, No. 3, pp. 855-861 (May/Jun 2002).	
		WILKES, Kenneth T. "Gas Permeation Through Vacuum Barrier Films and its Effect on VIP Thermal Performance," Vacuum Insulation Panel Symp., Baltimore, Maryland (May 3 1999)	
		YANAGAWA, H. et al., "Index-and-Dimensional Taper and Its Application to Photonic Devices," *Journal of Lightwave Technology*, 10(5):587-591 (1992).	
		Office Action issued on September 27, 2004 in U.S. Serial No. 10/291,179 (Attorney Docket No. 09140-0001-00).	
		Office Action issued on November 28, 2001 in U.S. Patent No. 6,506,289 (Attorney Docket No. 09140-0002-01).	
		Response to Office Action filed on February 20, 2002 in U.S. Patent No. 6,506,289 (Attorney Docket No. 09140-0002-01).	
		Office Action issued on April 17,2002 in U.S. Patent No. 6,506,289 (Attorney Docket No. 09140-0002-01).	
		Response to Office Action filed on July 17, 2002 in U.S. Patent No. 6,506,289 (Attorney Docket No. 09140-0002-01).	
		Quayle Action issued on November 10, 2003 in U.S. Patent No. 6,827,826 (Attorney Docket No. 09140-0002-02).	
		Office Action issued on May 2, 2002 in U.S. Patent No. 6,533,907 (Attorney Docket No. 09140-0004-00).	
		Response to Office Action filed on September 3, 2002 in U.S. Patent No. 6,533,907 (Attorney Docket No. 09140-0004-00).	
		Office Action issued on February 12, 2004 in U.S. Serial No. 09/903,081 (Attorney Docket No. 09140-0014-00).	
		Response to Office Action filed on August 10, 2004 in U.S. Serial No. 09/903,081 (Attorney Docket No. 09140-0014-00).	
		Office Action issued on September 10, 2004 in U.S. Serial No. 09/903,081 (Attorney Docket No. 09140-0014-00).	
		Office Action issued on May 14, 2003 in U.S. Serial No. 10/101,492 (Attorney Docket No. 09140-0015-00).	
		Response to Office Action filed on August 14, 2003 in U.S. Serial No. 10/101,492 (Attorney Docket No. 09140-0015-00).	
		Office Action issued on September 3, 2003 in U.S. Serial No. 10/101,492 (Attorney Docket No. 09140-0015-00).	
		Response to Office Action filed on March 3, 2004 in U.S. Serial No. 10/101,492 (Attorney Docket No. 09140-0015-00).	

Examiner Signature		Date Considered	

EXAMINER: Initial if reference considered, whether or not citation is in conformance with MPEP 609. Draw line through citation if not in conformance and not considered. Include copy of this form with next communication to applicant.

IDS Form PTO/SB/08: Substitute for form 1449A/PTO				Complete if Known	
INFORMATION DISCLOSURE STATEMENT BY APPLICANT				*Application Number*	10/954,182
				Filing Date	October 1, 2004
				First Named Inventor	Zhang et al.
				Art Unit	2882
(Use as many sheets as necessary)				*Examiner Name*	Not Yet Assigned
Sheet	9	of	9	*Attorney Docket Number*	09140-0016-01000

NON PATENT LITERATURE DOCUMENTS			
Examiner Initials*	Cite No.[1]	Include name of the author (in CAPITAL LETTERS), title of the article (when appropriate), title of the item (book, magazine, journal, serial, symposium, catalog, etc.), date, page(s), volume-issue number(s), publisher, city and/or country where published.	Translation[6]
		Office Action issued on February 24, 2004 in U.S. Serial No. 10/101,863 (Attorney Docket No. 09140-0016-00).	
		Response to Office Action filed on July 23, 2004 in U.S. Serial No. 10/101,863 (Attorney Docket No. 09140-0016-00).	
		Office Action issued on October 6, 2004 in U.S. Serial No. 10/101,863 (Attorney Docket No. 09140-0016-00).	
		Office Action issued on October 22, 2003 in U.S. Serial No. 10/101,341 (Attorney Docket No. 09140-0017-00).	
		Response to Office Action filed on February 23, 2004 in U.S. Serial No. 10/101,341 (Attorney Docket No. 09140-0017-00).	
		Office Action issued on June 10, 2004 in U.S. Serial No. 10/101,341 (Attorney Docket No. 09140-0017-00).	
		Response to Office Action filed on December 08, 2004 in U.S. Serial No. 10/101,341 (Attorney Docket No. 09140-0017-00).	
		Office Action issued on May 4, 2004 in U.S. Serial No. 10/101,493 (Attorney Docket No. 09140-0021-00).	
		International Search Report issued on November 21, 2003 in PCT/US03/24809 (Attorney Docket No. 09140-0025-00).	
		International Search Report issued on October 11, 2004 in PCT/US2004/005531 (Attorney Docket No. 09140-0030-00)	
		Written Opinion issued on October 11, 2004 in PCT/US2004/005531 (Attorney Docket No. 09140-0030-00)	

Examiner Signature		Date Considered	

EXAMINER: Initial if reference considered, whether or not citation is in conformance with MPEP 609. Draw line through citation if not in conformance and not considered. Include copy of this form with next communication to applicant.

(19) Europäisches Patentamt
European Patent Office
Office européen des brevets

(11) Publication number: 0 510 883 A2

(12) EUROPEAN PATENT APPLICATION

(21) Application number: 92303476.3

(22) Date of filing: 16.04.92

(51) Int. Cl.[5]: H01S 3/23, H01S 3/17, H01S 3/091, G02B 6/12, C03C 15/00

(30) Priority: 25.04.91 US 691262

(43) Date of publication of application: 28.10.92 Bulletin 92/44

(84) Designated Contracting States: DE FR GB

(71) Applicant: AMERICAN TELEPHONE AND TELEGRAPH COMPANY
550 Madison Avenue
New York, NY 10022 (US)

(72) Inventor: Bruce, Allan James
2351 Seneca Road
Westfield, New Jersey 07090 (US)
Inventor: Shmulovich, Joseph
82 Sagamore Drive
Murray Hill, New Jersey 07974 (US)
Inventor: Wong, Amy
169-51 25th Avenue
Whitestone, New York 11357 (US)
Inventor: Wong, Yiu-Huen
160 Woodland Avenue
Summit, New Jersey 07901 (US)

(74) Representative: Watts, Christopher Malcolm Kelway, Dr. et al
AT&T (UK) LTD. AT&T Intellectual Property Division 5 Mornington Road
Woodford Green Essex IG8 OTU (GB)

(54) Planar optical device.

(57) An active optical device comprises a glass, waveguiding structure (20,30,40,50) disposed on a substantially planar principal surface of a substrate (10). The structure includes a silica-based, erbium-doped active core (40). The active core has an erbium-to-silicon atomic ratio of at least about 0.01, an absolute erbium concentration of at least about 1.4×10^{20} atoms per cubic centimeter, and a radiative lifetime of the erbium lasing level of at least about 7 milliseconds. Also disclosed is a method for forming an active optical device, including the step of depositing an erbium-doped active core by sputtering.

FIG. 1

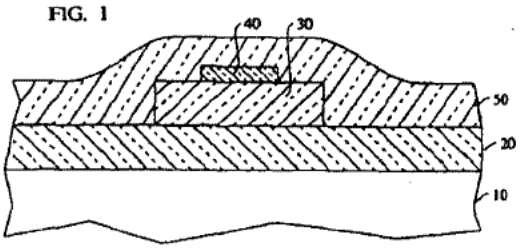

EP 0 510 883 A2

Field of the Invention

This invention relates to active optical devices, such as amplifiers, that operate by stimulated emission in laser glass, and more particularly to devices made in the form of planar optical waveguides.

Art Background

Optical amplifiers are important in networks for distributing optical signals. Optical fiber amplifiers, made from glass that is doped with rare earth elements such as erbium, are a well-known example. For example, U. S. Patent No. 4,826,288, issued to R. J. Mansfield, et al. on May 2, 1989, describes one method for fabricating optical fibers having cores with relatively high rare earth content. However, for applications such as premises distribution of optical signals, where components need to be relatively small and device integration is desirable, it is advantageous to provide optical amplifiers in the form of planar waveguides deposited on silicon substrates. However, as currently envisioned, such devices are much shorter than optical fiber amplifiers, and the required level of doping is correspondingly much greater.

Attempts to deposit layers of glass at the high doping level appropriate for this purpose have been generally unsatisfactory. For example, a doped soot layer can be formed by chemical vapor deposition, and subsequently sintered to form a glass layer. A method for forming glass waveguides is described, for example, in U.S. Patent No. 4,425,146, issued to T. Izawa, et al., on January 10, 1984. A process forming sintered glasses containing rare earth dopants is described, for example, in U.S. Patent No. 4,826,288, issued to R. J. Mansfield, et al., on May 2, 1989. However, the sintering temperature required, which may be as much as about 1200°C, may promote phase separation and may damage underlying structures on the substrate. As a consequence, it would be advantageous to find a core glass composition that can be doped with erbium and incorporated in a waveguide amplifier without exposing the waveguide structure to potentially damaging, high temperatures.

Summary of the Invention

In a broad sense, the invention is an active optical device in the form of a planar optical waveguiding structure. The device includes an elongate, active glass core which comprises silicon, oxygen, and erbium, the erbium being at least partially in the form of Er^{3+} ions. The active core further comprises an alkali metal or alkaline earth metal in an effective quantity to prevent clustering of erbium atoms. The device further includes a glass cladding, means for coupling signal radiation into and out of the active core, and means for coupling pump radiation into the active core to pump the Er^{3+} ions. The cladding and core are formed such that they overlie a substantially planar principal surface of a substrate. In the active core, the erbium-to-silicon atomic ratio is at least about 0.01, the absolute erbium concentration is at least about 1.4 x 10^{20} atoms per cubic centimeter, and the erbium lasing level has a radiative lifetime of at least about 7 ms.

In another aspect, the invention is a method for forming an optical device on a silicon substrate having a substantially planar principal surface. The method includes, first, the step of forming a first layer of vitreous silicon dioxide on the principal surface. After that, a second layer of silica-based glass is deposited over the first layer by sputtering a target of silica-based glass containing sodium and erbium such that the second layer has a higher refractive index than the first layer. Significantly, the target composition is selected such that the core has an erbium-to-silicon atomic ratio of at least about 0.01 and a sodium-to-silicon atomic ratio in the approximate range 0.2 - 0.6, the absolute erbium concentration is at least about 1.4 x 10^{20} atoms per cubic centimeter, and the target composition is further selected such that a lasing level is associated with the erbium in the core, the lasing level having a radiative lifetime of at least about 7 ms. After the sputtering step, the second layer is annealed such that it is stabilized. A portion of the second layer is subsequently removed by etching, such that an elongate core is formed. After that, a third layer of phosphosilicate glass is deposited over the core such that the third layer has a smaller refractive index than the core.

Brief Description of the Drawings

FIG. 1 is a schematic, sectional end view of the inventive waveguiding structure, according to one embodiment.

FIG. 2 is a schematic, top view of the waveguiding structure of FIG. 1.

FIG. 3 is a schematic, sectional side view of the inventive waveguiding structure, according to an alternative embodiment.

FIG. 4 is a flowchart of the steps in an exemplary process for manufacturing the inventive waveguiding structure.

Detailed Description Of A Preferred Embodiment

The inventive optical amplifier is to be used to amplify optical signals by stimulated emission from Er^{3+} ions. As is well known in the art, the appropriate signal wavelength is about 1.55 µm. Various wavelengths of pump radiation are readily used to excite the Er^{3+} ions, as is described in greater detail below.

With reference to FIG. 1, a currently preferred embodiment of the inventive optical amplifier includes a silicon substrate 10, a lower cladding layer 20 overly-

ing the substrate, a passive core 30 overlying the lower cladding layer, an active core 40 overlying the passive core, and an upper cladding layer 50 overlying the active and passive cores and the lower cladding layer. In alternative embodiments of the invention, the passive core is omitted.

As is apparent in the figure, the two cores are substantially surrounded by the two cladding layers. The refractive indices of the upper and lower cladding layers are not necessarily equal to each other. However, they should both be smaller than the refractive index of the active core, and also smaller than the refractive index of the passive core. As a consequence of the refractive index differences, electromagnetic radiation of the signal wavelength and at least one pump wavelength is guided in both the active core and the passive core. (In general, the waveguiding properties of the active and passive cores are not distinctly separable. Thus, for example, radiation guided in the active core is not guided exclusively therein, but by an effective core to which the underlying passive core also contributes.)

Preferably, the active and passive cores function as single-mode waveguides, at least with respect to the signal wavelength. Thus, signal radiation is preferably guided exclusively in the fundamental mode. However, it should be noted that alternative embodiments are envisioned in which both the active and the passive cores function as multimode waveguides with respect to both the signal and pump radiation.

The refractive index of the active core is preferably somewhat greater than the refractive index of the passive core, in order to capture the greatest possible amount of light in the active core. (For example, active and passive cores are readily made having respective refractive indices of 1.50 and 1.45.) As a consequence of such refractive index difference, electromagnetic waves that are guided in the active core will have narrower mode profiles than waves guided in the passive core. Accordingly, it is advantageous in such situations to make the active core narrower than the passive core. Such a relatively narrow active core 40 is depicted in FIG. 1.

Lower cladding layer 20 is formed on an appropriately prepared, substantially planar principal surface of substrate 10, which is exemplarily a silicon wafer. Layer 20 is exemplarily a HIPOX layer; i.e., a layer of vitreous silicon dioxide that is grown by thermal oxidation of silicon under high pressure steam according to methods that are well-known in the art. The thickness of layer 20 should be greater than about 10 µm, because optical leakage may occur at substantially smaller thicknesses. A currently preferred thickness is about 15 µm.

Passive core 30 is exemplarily made from phosphosilicate glass. The phosphorus content, and concomitantly the refractive index, of the glass is selected (with reference to the compositions of layers 20 and 50 and active core 40) to provide the desired waveguiding properties, according to methods well known in the art. A useful range of glass compositions for passive core 30 consist of silica containing up to about 8 wt.% phosphorus, and the phosphorus content more typically lies in the range 4 - 8 wt.%. Core 30 is exemplarily deposited on layer 20 by low-pressure chemical vapor deposition, according to methods that are well-known in the art. The thickness of the passive core is exemplarily about 5 µm, and the width of the passive core is exemplarily about 7 µm.

Active core 40 is made from a silica-based glass having a relatively high concentration of erbium, e.g., glass having an erbium-to-silicon atomic ratio of at least about 0.01, preferably at least about 0.02, and still more preferably at least about 0.03. Furthermore, the absolute erbium concentration is at least about 1.4 x 10^{20} atoms per cubic centimeter. A smaller erbium-to-silicon ratio is undesirable because it could lead to an undesirably small value of signal gain per unit length of the amplifier.

Various glass-modifying chemical elements (hereafter, "modifiers") are advantageously added to the glass of the active core in order to increase the solubility of erbium in the glass, and thus to prevent clustering of erbium atoms at high concentrations. Certain modifiers have been found to increase erbium solubility while avoiding concentration-quenching effects, which would otherwise reduce the Er^{3+} radiative lifetime below about 7 ms at relatively high concentrations (i.e., at erbium-to-silicon atomic ratios greater than about 0.02). Modifiers that are useful in this regard include alkali metals such as sodium and alkaline earth metals such as calcium.

Modifiers are also usefully incorporated in the active core glass to control the homogeneous and inhomogeneous broadening of the Er^{3+} absorption and emission peaks. Such modifiers include alkali and alkaline earth metals, which in at least some cases tend to make the peaks narrower, and elements such as lanthanum, yttrium, and zirconium, which contribute high field-strength ions and tend to broaden the peaks. Modifiers (such as aluminum and gallium) that enhance the degree of cross linkage in the glass network may also increase the degree of inhomogeneous broadening. In some cases, such modifiers are advantageously added to offset the effects of other modifiers on the absorption and emission peaks.

Modifiers are also usefully incorporated in order to stabilize the glass against devitrification, crystallization, and attack by moisture during or after film deposition. Modifiers useful for that purpose include calcium, magnesium, aluminum, and lanthanum. (Because the active core glass typically has a greater thermal expansion coefficient than the underlying silicon and silica regions, it may also be advantageous to add modifiers that reduce the thermal expansion.)

Thus, for example, an active core glass with a rel-

atively high solubility for erbium is readily made by incorporating in silica glass an effective amount of sodium. An effective range for the sodium-to-silicon atomic ratio is from about 0.2 to about 0.6. An optional quantity of calcium, up to a calcium-to-silicon atomic ratio of about 0.2, is usefully incorporated in order to enhance erbium solubility and to stabilize the glass, as discussed above. An optional quantity of aluminum, up to an aluminum-to-silicon atomic ratio of about 0.1, is usefully incorporated in order to stabilize the glass. Similarly, optional quantities of other modifiers, such as those listed above, are usefully added in quantities that are limited, inter alia, by the ultimate refractive index desired and the relevant solubility limits.

An exemplary method for depositing active core 40 is by sputtering, as described in detail below. As noted, the refractive index of active core 40 should be greater than those of both cladding layers, and also greater than the refractive index of passive core 30. Significantly, the use of sputtering offers the advantage that the concentration of Er^{3+} ions can be made substantially uniform throughout the active core. Moreover, radiation damage (which can occur when erbium doping is performed by ion implantation) is avoided.

The thickness of the active core is exemplarily about 1.2 µm. If the active core is made substantially thinner than about 1.0 µm, there will be no guided mode at the signal wavelength. The width of the active core should be at least about 4 µm, and is exemplarily about 8 µm. The total length of the active core is typically 5 mm or more.

Upper cladding layer 50 is advantageously made from phosphosilicate glass, exemplarily by low-pressure chemical vapor deposition. In order to provide the desired index of refraction, an appropriate content of, e.g., phosphorus is selected according to methods well known in the art. An exemplary phosphorus content is about 2 wt.%. The thickness of the upper cladding layer is exemplarily about 5 µm.

In use, an optical signal at a wavelength of about 1.55 µm, and pump radiation at least at one wavelength shorter than 1.55 µm, are coupled into the passive core, and from the passive core into the active core. As is well-known in the art, pump radiation is absorbed by Er^{3+} ions in the active core, promoting at least some of them to the $^4I_{13/2}$ state, which is a lasing level of atomic excitation. The lasing level is not reached directly, but rather by optical excitation to any one of several excited states of still higher energy. The lasing level is reached by nonradiative decay from those higher states. Correspondingly, pump radiation is effective at any of a group of wavelengths, including 980 nm, 810 nm, 660 nm, 514 nm, and 1.48 µm.

In order for excitation of erbium ions, and resulting amplification, to take place, the signal and pump radiation must be coupled from the passive core into the active core, and vice versa. With reference to FIG. 2, this is readily achieved by providing the active core with tapers 60. That is, the active core has two terminal portions, each of which is progressively constricted as the corresponding end is approached. The constriction is in at least one dimension normal to the longitudinal axis of the core. The normal dimension may be transverse, as shown in FIG. 2, or, as depicted in FIG. 3, it may be vertical; i.e., normal to the orientation of the deposited layers.

In the preferred embodiment, the tapers 60 are adiabatic; that is, the signal radiation remains in the fundamental mode as it is coupled from the passive to the active core, and again when it is coupled from the active to the passive core. (In the preferred embodiment, the active and passive cores are, of course, single-mode waveguides with respect to the signal radiation.) As is well known in the art, a taper will be adiabatic only if it is relatively gradual. For example, a straight-sided taper in this context will generally be adiabatic if it has a reduction ratio of about 100:1; i.e., the original width (or depth) is constricted, in effect, down to zero over a length that is 100 times the original width (or depth). The length of each tapered region is exemplarily about 1 mm.

Shown in FIG. 3 is a flowchart representing an exemplary sequence of steps in the fabrication of the inventive optical amplifier. The enumeration of the process steps in the following discussion is made with reference to the figure.

In Step A, the lower cladding layer is first formed.

In Step B, a layer corresponding to the passive core is then deposited on the upper surface of the lower cladding layer.

In Step C, the workpiece is annealed in order to at least partially densify the deposited passive core layer. Appropriate annealing conditions will be readily apparent to a skilled practitioner in the art.

In Step D, the passive core is then formed by etching the passive core layer. Dry etching is preferable for this step.

In Step E, the workpiece is annealed in order to flow the passive core, reducing roughness that was caused by etching. Appropriate annealing conditions will be readily apparent to a skilled practitioner in the art.

In Step F, a layer corresponding to the active core is then deposited.

In Step G, the workpiece is annealed, exemplarily at 600°C for 2 hours in air. The purpose of this annealing step is to stabilize the deposited film (i.e., against subsequent changes in structure, optical properties, and susceptibility to chemical attack).

In Step H, the active core is then formed by etching away a portion of the active core layer. A preferred etching process for Step H is ion milling, because this process is relatively nonselective with regard to the

composition of the material being removed.

In optional Step I, the workpiece is desirably annealed in order to flow the active core, and thereby to reduce surface roughness created during Step H. Appropriate annealing conditions will be readily apparent to a skilled practitioner in the art.

In Step J, the workpiece is then annealed at a temperature of at least about 700°C for a duration of at least about 1 hour in a reactive atmosphere such as very dry oxygen. (An appropriate grade of oxygen for this purpose is research grade, i.e., 99.999% purity.) This step is believed to reduce contaminant levels.

In optional Step K, before the upper cladding layer is deposited, a protective film of an appropriate dielectric material is advantageously formed over the active core in order to prevent contamination of the active core by the upper cladding layer. Such contamination should be avoided because it can reduce the radiative lifetime of the Er^{3+} ions below acceptable limits. Protective films that are effective for that purpose can be, e.g., silicon dioxide or phosphorus silicate films formed by sputtering or evaporative deposition. Such a protective film, if used, should be at least about 1000 Å thick.

In Step L, the upper cladding layer is then deposited.

Etching steps D and H are carried out such that after etching is completed the remaining portions of the active and passive core layers describe at least one pair of elongated cores, comprising an active core overlying a passive core. The two cores have a common longitudinal axis. As is apparent in FIGs. 2 and 3, the active core is typically made smaller than the passive core in the longitudinal direction. As seen in FIG. 2, this leads to a pair of terminal passive core portions 70 not overlain by the active core. If the taper is formed with respect to the transverse direction, as shown in FIG. 2, the active core will also typically be smaller than the passive core in the transverse direction. However, if the taper is formed with respect to the vertical direction, as shown in FIG. 3, then the widths (i.e., in the transverse direction) of the active and passive cores are optionally made equal.

As noted above, an exemplary method of depositing the active core layer is by sputtering. According to this method, a glass target of a predetermined composition is provided. The silicon substrate and the target are both placed within a vacuum chamber that is evacuable to a pressure of about 3×10^{-7} torr or less. The chamber is evacuated and oxygen and argon are admitted. A radio-frequency discharge is produced, which leads to evaporation of material from the target and redeposition of such material on the substrate, as is well-known in the art.

As noted above, it is desirable for the deposited active core layer to contain sodium or a similarly-behaving modifier, in order to prevent clustering of the erbium atoms. Sputtering of sodium-containing glass often has unsatisfactory results because the sodium content of the deposited glass often tends to fall far below the sodium content of the target. However, we have discovered that under appropriate sputtering conditions, the sodium content of the deposited glass can be made relatively close to that of the target. We have found the following conditions in the sputtering chamber to be desirable in that regard: a pressure of 8 - 50 µm, and preferably about 27 µm; an argon-to-oxygen flow ratio in the range 10:1 to 0.3:1, and preferably about 0.5:1; a substrate temperature that can range freely between about 25°C and about 70°C; and rf frequency of 13.6 MHz and power of about 50 W. We used a target 3 in. (7.6 cm) in diameter and a silicon-wafer substrate 4 in. (10.2 cm) in diameter. The target was situated 1 - 3 in. (2.5 - 7.6 cm) from the substrate, preferably about 3 in. (7.6 cm).

The radiative lifetime of the lasing level of the excited erbium ions is desirably at least about 7 ms. In order to achieve such relatively high lifetimes, it is particularly important to include, during formation of the device, Step J, annealing in a reactive atmosphere.

In use, the signal and the pump radiation are combined and injected into the amplifier, exemplarily by means of directional coupler or wavelength division multiplexer 80, shown in FIG. 2. The amplified signal is extracted, exemplarily by wavelength division demultiplexer 85 of FIG. 2, and unwanted pump radiation that would otherwise contaminate the amplified signal is eliminated, exemplarily by filtering. Such methods are well-known in the art, and need not be described here in detail.

The foregoing discussion is for illustrative purposes only, and is not intended to limit the scope of the invention to a single-pass optical amplifier. For example, a laser or parametric oscillator is readily made by incorporating at least one optical feedback element with the inventive waveguiding structure. An appropriate such element is, e.g., a mirror or a distributed Bragg reflector. Such an arrangement is readily envisioned with reference to FIG. 2, substituting a mirror or Bragg reflector for one or both of elements 80 and 85.

EXAMPLE

Erbium-doped glass films, varying in thickness from about 0.8 µm at the edge to about 1.5 µm at the center, were formed on 4-in. (10.2-cm) diameter silicon wafer substrates by sputter deposition, substantially as described above. In separate trials, three different target compositions were used. The target compositions will be described with reference to the general formula $SiO_2(Na_2O)_a(CaO)_b(Er_2O_3)_c$. The compositions of the resulting, sputter-deposited films will similarly be represented by $SiO_2(Na_2O)_{a'}(CaO)_{b'}(Er_2O_3)_{c'}$.

The first target had a=0.27, b=0.14, and c=0.028. The resulting sputter-deposited layer had a'=0.20, b'=0.117, and c'=0.0275. The second target had a=0.34, b=0.00, and c=0.033, resulting in a deposited layer with a'=0.30 and c'=0.036. The third target had a=0.265, b=0.00, and c=0.038, resulting in a deposited layer with a'=0.17 and c'=0.032. The deposited layers were analyzed by Rutherford backscattering. All three layers had erbium radiative lifetimes of about 10 milliseconds, and densities of about 6 x 10^{22} atoms per cubic centimeter.

Claims

1. An optical device, comprising:
   a) an elongate, active glass core which extends along a longitudinal axis and comprises silicon, oxygen, and erbium, the erbium being at least partially in the form of Er^{3+} ions, the active core having a refractive index;
   b) a glass cladding comprising at least one layer which at least partially surrounds the active core and has a refractive index which is smaller than the core refractive index;
   c) means for coupling signal radiation, having a signal wavelength, into the active core and means for coupling the signal radiation out of the active core; and
   d) means for coupling pump radiation into the active core such that pump radiation of an appropriate wavelength will excite at least some of the Er^{3+} ions to a lasing level, leading to amplification of the signal radiation by stimulated emission,
   CHARACTERIZED IN THAT
   e) the device further comprises a substrate having a substantially planar principal surface;
   f) the active core is a body that overlies a portion of the principal surface;
   g) the cladding comprises a lower cladding layer disposed between the active core and the principal surface, and an upper cladding layer which overlies and partially surrounds the active core;
   h) the active core further comprises an alkali metal or alkaline earth metal in an effective quantity to prevent clustering of erbium atoms;
   i) the active core has an erbium-to-silicon atomic ratio of at least about 0.01 and an absolute erbium concentration of at least about 1.4 x 10^{20} atoms per cubic centimeter, and
   j) the lasing level has a radiative lifetime of at least about 7 ms.

2. The optical device of claim 1, wherein the substrate comprises a silicon body.

3. The optical device of claim 1, wherein the active core has an erbium-to-silicon atomic ratio of at least about 0.02.

4. The optical device of claim 1, wherein the active glass core is adapted to guide the fundamental mode of the signal wavelength, and the means for coupling the signal radiation into and out of the active core are adapted to couple the signal radiation adiabatically.

5. The optical device of claim 1, wherein the concentration of Er^{3+} ions is substantially constant throughout the active core, and the active core is substantially free of radiation damage.

6. The optical device of claim 1, wherein the alkali metal or akaline earth metal comprises sodium, and the active core has a sodium-to-silicon atomic ratio in the approximate range 0.2 - 0.6.

7. The optical device of claim 1, wherein the alkali metal or akaline earth metal comprises calcium, and the active core has a calcium-to-silicon atomic ratio of not more than about 0.2.

8. The optical device of claim 4, further comprising an elongate, waveguiding, passive, glass core which extends along the longitudinal axis and is disposed between the lower cladding layer and the active core, the passive core being adapted to guide the fundamental mode of the signal radiation, means for coupling an optical signal and pump radiation into the passive core, and means for coupling signal radiation out of the passive core, wherein:
   the passive core is substantially free of erbiuin and has a refractive index that is smaller than the active core refractive index but larger than the upper and lower cladding refractive indices,
   the active core includes a central portion and two ends,
   and the means for coupling the signal radiation into and out of the active core comprise two further, tapered portions of the active core, each tapered portion extending between the central portion and an end and tapering toward the respective end such that the tapered portion is progressively constricted in at least one direction perpendicular to the longitudinal axis.

9. The optical device of claim 8, wherein the perpendicular direction is substantially parallel to the substrate principal surface.

10. The optical device of claim 8, wherein the perpendicular direction is substantially normal to the

substrate principal surface.

11. The optical device of claim 8, wherein the passive core comprises phosphosilicate glass, the upper cladding layer comprises phosphosilicate glass, and the lower cladding layer comprises thermal silicon dioxide.

12. The optical device of claim 1, further comprising at least one optical feedback element, such that the device can function as a laser.

13. The optical device of claim 1, further comprising at least one optical feedback element, such that the device can function as a parametric oscillator.

14. A method for forming an optical device on a substrate having a substantially planar principal surface, comprising:

a) forming a first layer of vitreous silicon dioxide on the principal surface;

b) depositing a second layer of silica-based glass over the first layer by sputtering a target of silica-based glass such that the second layer has a higher refractive index than the first layer,

c) annealing the second layer such that it is stabilized;

d) removing a portion of the second layer by etching, such that an elongate core, extending along the longitudinal axis, is formed, the core being adapted, after completion of the device, to guide electromagnetic radiation of at least a signal wavelength and a pump wavelength; and

e) depositing a third layer of phosphosilicate glass over the core such that the third layer has a smaller refractive index than the core;

CHARACTERIZED IN THAT

f) the target further comprises sodium and erbium; and

g) the target composition is selected such that the core has an erbium-to-silicon atomic ratio of at least about 0.01, a sodium-to-silicon atomic ratio in the approximate range 0.2 - 0.6, and an absolute erbium concentration of at least about 1.4 x 10^{20} atoms per cubic centimeter, and the target composition is further selected such that a lasing level is associated with the erbium in the core, the lasing level having a radiative lifetime of at least about 7 ms.

15. The method of claim 14, further comprising, after (d) and before (e), the step of forming a protective dielectric film over the core.

16. The method of claim 14, further comprising, after (d), the step of annealing the core such that roughness due to etching of the second layer is substantially removed.

17. The method of claim 14, further comprising, after (d), the step of annealing the core at a temperature of at least about 700°C for a duration of at least about 1 hour in a reactive atmosphere.

18. A method for forming an optical device on a substrate having a substantially planar principal surface, comprising:

a) forming a first layer of silicon dioxide on the principal surface;

b) depositing a second layer of phosphosilicate glass over the first layer such that the second layer has a higher refractive index than the first layer;

c) annealing the second layer such that it is at least partially densified;

d) removing a portion of the second layer by etching, such that an elongate lower core having a longitudinal axis is formed, the lower core being adapted, after completion of the device, to guide electromagnetic radiation of at least a signal wavelength and a pump wavelength;

e) annealing the lower core such that roughness due to etching of the second layer is substantially removed;

f) depositing a third layer of silica-based glass over the lower core by sputtering a target of silica-based glass such that the third layer has a higher refractive index than the lower core;

g) annealing the third layer such that it is stabilized;

h) removing a portion of the third layer by etching, such that an elongate upper core, extending along the longitudinal axis, is formed, the upper core being adapted, after completion of the device, to guide electromagnetic radiation of the signal and pump wavelengths;

i) annealing the upper core at a temperature of at least about 700°C for a duration of at least about 1 hour in a reactive atmosphere; and

j) depositing a fourth layer of phosphosilicate glass over the upper and lower cores such that the fourth layer has a smaller refractive index than the upper and lower cores;

CHARACTERIZED IN THAT

k) the target further comprises sodium and erbium; and

l) the target composition is selected such that the third layer has an erbium-to-silicon atomic ratio of at least about 0.01, a sodium-to-silicon atomic ratio in the approximate range 0.2 - 0.6, and an absolute erbium concentration of at least about 1.4 x 10^{20} atoms per cubic cen-

timeter, and the target composition is further selected such that a lasing level is associated with the erbium in the third layer, the lasing level having a radiative lifetime of at least about 7 ms.

19. The method of claim 18 further comprising, after (i) and before (j), the step of forming a protective dielectric film over the active core.

20. The method of claim 17 or claim 18, wherein the reactive atmosphere comprises very dry oxygen.

21. The method of claim 18 a further comprising, after (h), the step of annealing the upper core such that roughness due to etching of the third layer is substantially removed.

FIG. 1

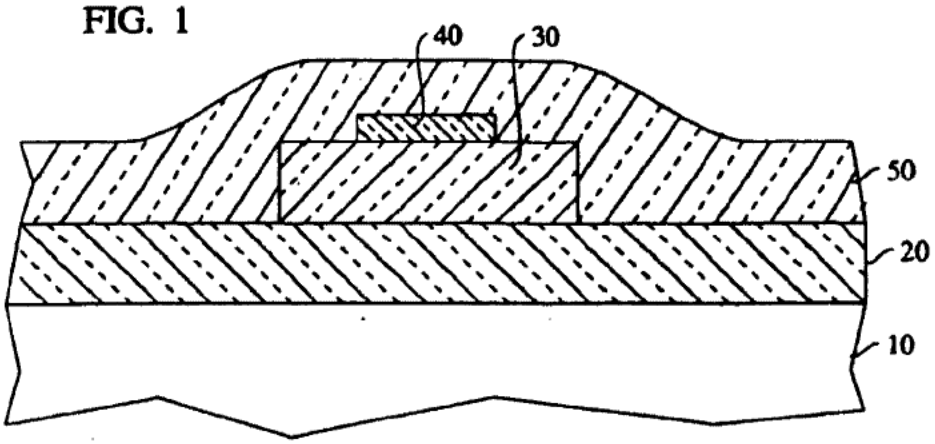

FIG. 2

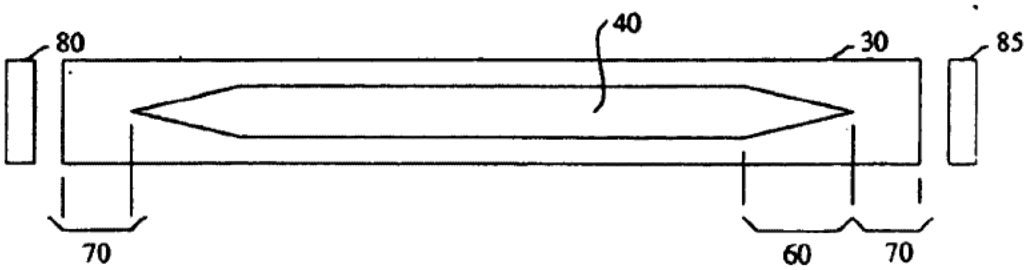

FIG. 3

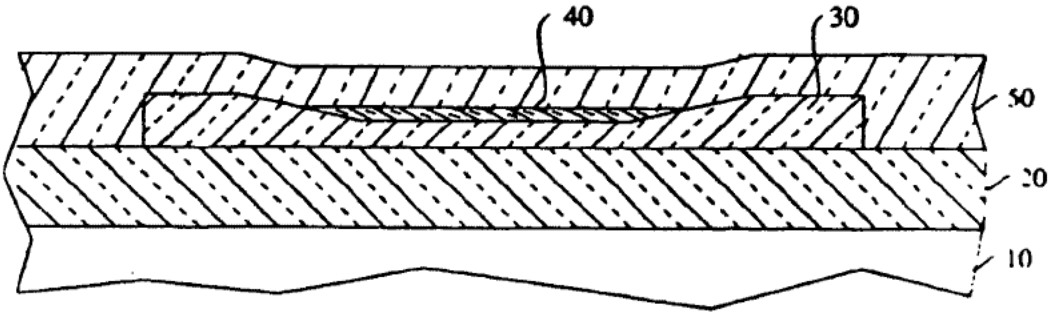

FIG. 4

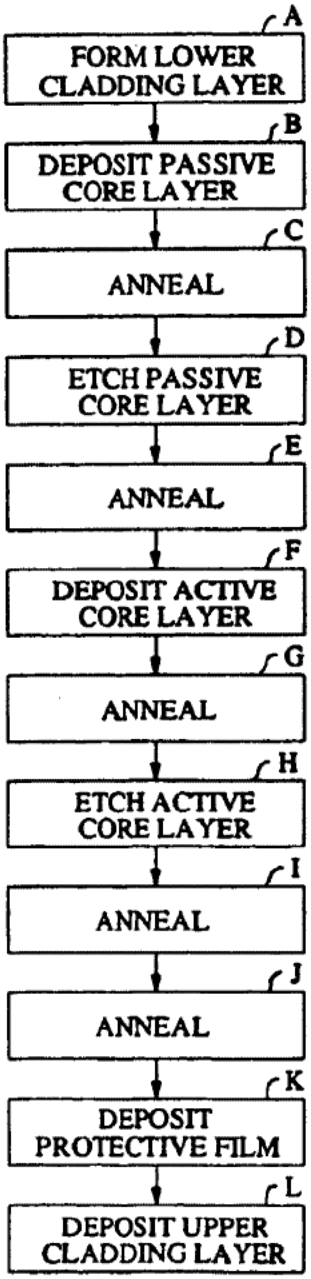

(19) Europäisches Patentamt
European Patent Office
Office européen des brevets

(11) EP 1 189 080 A2

(12) EUROPEAN PATENT APPLICATION

(43) Date of publication:
20.03.2002 Bulletin 2002/12

(51) Int Cl.7: G02B 6/12

(21) Application number: 01307867.0

(22) Date of filing: 14.09.2001

(84) Designated Contracting States:
AT BE CH CY DE DK ES FI FR GB GR IE IT LI LU MC NL PT SE TR
Designated Extension States:
AL LT LV MK RO SI

(30) Priority: 15.09.2000 US 663013

(71) Applicant: Agere Systems Optoelectronics Guardian Corporation
Orlando, Florida 32819-8698 (US)

(72) Inventor: Shmulovich, Joseph
Murray Hill, NJ 07974 (US)

(74) Representative: Williams, Celli
Stevens Hewlett & Perkins
Halton House
20/23 Holborn
London EC1N 2JD (GB)

(54) Method for making a planar optical waveguide

(57) The present invention is a method for making planar waveguides. The method comprises the steps of providing a workpiece comprising a layer of material suitable for the waveguide strip; patterning the layer so that the workpiece comprises a base portion and the at least one protruding portion; forming a cladding layer on the protruding portion; and attaching the cladding layer to a substrate. Depending on the composition of the workpiece, the process may further require removing the base portion to expose the bottom surface of the protruding portion. With this method, a planar waveguide or a planar waveguide amplifier may be fabricated having thickness dimensions greater than 5 μm, or more preferably, in the range of 10-20 μm.

FIG. 2E

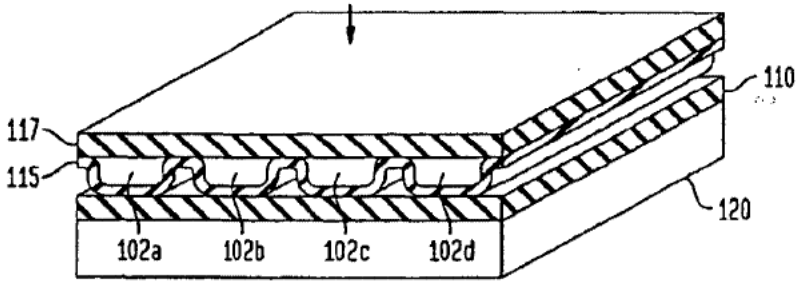

EP 1 189 080 A2

Printed by Jouve, 75001 PARIS (FR)

Description

[0001] The present invention relates to a method for making planar waveguides having relatively large thickness dimensions. The invention is useful in fabricating planar waveguide arrays and planar waveguide amplifiers for communications systems.

[0002] Optical communications systems can transmit optical signals over long distances at high speeds. An optical signal is transmitted from a light source to a waveguide and ultimately to a detector. Waveguide structures such as optical fibers transmit the light signals. Basically, a waveguide structure comprises an inner core region fabricated from a material having a certain index of refraction, and an outer cladding region contiguous the core comprised of a material having a lower index of refraction. A light beam propagated along the core will be guided along the length of the waveguide by total internal reflection.

[0003] Planar waveguides are flat waveguide structures that guide light in essentially the same way as optical fibers. A planar waveguide structure comprises a higher index core strip of material (the "waveguide strip") embedded in a lower index substrate.

[0004] Optical communication systems typically include a variety of devices (*e.g.*, light sources, photodetectors, switches, optical fibers, amplifiers, and filters). Amplifiers and filters may be used to facilitate the propagation light pulses along the waveguide.

[0005] The connections between the various system components inherently produce loss in optical communication systems. For example, in planar waveguide amplifiers it would be desirable to couple planar waveguides with a multimode signal collection fiber. However, applying conventional processing, planar waveguide amplifiers typically cannot be made with cores that are more than about 5 μm thick, and conventional sputtered films have a thickness of about 2-3 μm. On the other hand, a multimode signal collection fiber has a core that is typically more than 50 μm in diameter. This mismatch in vertical dimension makes it very difficult to efficiently couple light from a multimode signal collection fiber to a planar waveguide. Losses can amount to up to 17 dB or in some cases up to ~ 97 to 98 percent of the transmitted light.

[0006] Many other factors also contribute to losses in waveguide connections. Such factors include overlap of fiber cores, misalignment of the fiber axes, fiber spacing, reflection at fiber ends, and the numerical aperture (NA) mismatch. If a fiber receiving light has a smaller NA than a fiber delivering the light, some light will enter the receiving fiber in modes that are not confined to the core and will leak out of the fiber. The loss can be quantified by the formula: Loss (dB) = $10 \log_{10} (NA_2/NA_1)^2$. Thus, significant losses can occur if fibers are mismatched and signals are traveling from a large core into a smaller core.

[0007] With the increasing demand for efficient, large-scale manufacturing of hybrid integrated opto-electronic devices, there is a need to more efficiently couple various waveguide devices together while minimizing losses.

[0008] The present invention is a method for making planar waveguides. The method comprises the steps of providing a workpiece comprising a layer of material suitable for the waveguide strip; patterning the layer so that the workpiece comprises a base portion and the at least one protruding portion; forming a cladding layer on the protruding portion; and attaching the cladding layer to a substrate. Depending on the composition of the workpiece, the process may further require removing the base portion. With this method, a planar waveguide or a planar waveguide amplifier may be fabricated having thickness dimensions greater than 5 μm, or more preferably, in the range of 10-20 μm.

[0009] The advantages, nature and various additional features of the invention will appear more fully upon consideration of the illustrative embodiments now to be described in detail in connection with the accompanying drawings. In the drawings:

FIG. 1 is a block diagram showing steps of the inventive method;

FIGS. 2A-2E schematically illustrate a planar waveguide structure at various steps of the Fig. 1 process; and

FIG. 3 is a schematic illustration of part of an optical communications system using a planar waveguide structure fabricated by the process of Fig. 1.

[0010] It is to be understood that these drawings are for the purposes of illustrating the concepts of the invention and are not to scale.

[0011] Referring to the drawings, Fig. 1 is a schematic block diagram showing the steps in making a planar waveguide. As shown in Block A of Fig. 1, the first step is to provide a workpiece comprising a layer of material suitable for the waveguide strip. The workpiece can be a bulk disk of the strip material or a substrate-supported layer of the strip material. The layer, if desired, can exceed the thickness of the waveguide strip to be formed.

[0012] The next step, shown in Block B is to pattern the layer of strip material to form at least one protruding portion corresponding in dimension to a waveguide strip to be fabricated. The patterning can be conveniently effected by photolithography, masking one or more protruding strips and etching the unmasked material as by wet etching. Preferably a plurality of protruding portions are patterned to produce an array of waveguides.

[0013] Fig. 2A illustrates the result of this step on a workpiece comprising bulk disk 100 of core glass. The disk is patterned by wet-etching at selected portions so that it comprises a base portion 101 and a plurality of protruding portion, 102a, 102b, ..., 102d. This can be

achieved by etching various channels in the disk. The protruding portions have a thickness and width corresponding substantially in dimension to the waveguide strips sought to be fabricated. The disk advantageously comprises aluminosilicate glass, but other glasses, such as soda-lime glass may be used. If it is desired that the waveguide structure should be a waveguide amplifier, the waveguide strip material should be doped with a small percentage of rare earth dopants by techniques well known in the art. The preferred rare earth dopant is erbium.

[0014] Etchants for wet etching the channels may be selected from HF etchant (~ 1% HF), $K_4Fe(CN)_6$, $K_3Fe(CN)_6$, $Na_2S_2O_3$, and KOH in H_2O. Alternatively, other patterning techniques such as dry etching or microscale imprinting can be used to produce the protruding portions.

[0015] Ultimately, the protruding portions or 102a, 102b,..., 102d, etc., will form the waveguide strips of the planar waveguide. Thus, the etching of the channels will be controlled to produce protruding portions having the desired dimensions. Protruding portions having a height (thickness) and/or width dimension of greater than 5μm may be formed. Preferably the channels are etched such that the protruding portions have a height h in the range of 10-20 μm and a width *w* in the range of 50-100 μm.

[0016] A third step shown in Block C of Fig. 1 is to deposit a cladding layer on the surface of the protruding portion(s). The cladding layer can be silica deposited by conventional techniques well known in the art. It is preferably deposited by the BPTEOS process.

[0017] Referring to FIG. 2B, a cladding layer 115 is shown deposited over the etched bulk glass, filling the channels. The material for this cladding layer will be selected depending on the waveguide strip material. The cladding material should have a lower index of refraction than the strip material. Silica cladding material can be used with aluminosilicate strip material. A plastic cladding may be used with a soda-lime strip material.

[0018] The patterned workpiece with the cladding layer thereon is then attached to a substrate for the planar waveguide (FIG. 1, block D). The cladding layer is attached to the waveguide substrate.

[0019] Fig. 2C shows the workpiece 100 inverted and the cladding layer is attached to the waveguide substrate 120. The substrate can be any of a wide variety of materials including glasses, ceramics and semiconductors. Preferably it is silicon. A dielectric or insulating layer 110, such as a layer of silica (SiO_2), may be disposed on the surface of between the substrate 120. The workpiece cladding can be attached to the substrate, by molecular bonding, such as with aluminosilicate or silicon, or by other appropriate bonding agents such as ceramic bakeable pastes. At this stage, the core (protruding portions 102a, 102b,...,102d) may be isolated with cladding on three sides and bound to the disk 100 at the fourth side. There is much flexibility in selecting the type of bonding agent because the core is protected from contacting the adhesive. Interstices 111a, 111b,...,111d, between the silica layer 110 and substrate 120 may be filled, if desired, with cladding material.

[0020] If the workpiece comprises a thin layer of strip material on a cladding material support, the waveguide is substantially complete. If the layer of strip material is thick or workpiece is a bulk disk of strip material, then the next step (Block E of Fig. 1) is to remove the base portion of the workpiece selectively leaving the protruding portions.

[0021] Referring to FIG. 2D, the base of the bulk glass disk 101 may be etched away, leaving the protruding portions 102a, 102b... partially surrounded by cladding layer 115 to comprise planar waveguide strips.

[0022] As a further optional final step, a top cladding layer 117 may be deposited over the exposed protruding portions 102a, 102b (FIG. 2E). If desired, the resulting structure may be diced into smaller pieces.

[0023] The method of the invention may be used to fabricate a waveguide structure or waveguide amplifier having waveguide core strips with relatively large dimensions. For example, a waveguide or waveguide amplifier may be made having cross-sectional dimensions of tens of microns, i.e., the height of the waveguide strips may be greater than 5 μm and more preferably in the range of about 10 μm - 20 μm or greater. The width of the strips also may be greater than 5 μm and more preferably in the range of about 30 μm - 50 μm or greater. Thus, the method allows for the making of planar waveguide structures having larger dimensions than possible with conventional methods. Such a structure is advantageous as it helps to reduce the vertical dimension mismatch between planar waveguides and optical fibers and thereby to reduce the losses that occur when such components are coupled together. The method is also advantageous as it can use wet etching which is faster than the dry etching and deposition techniques conventionally used for producing planar waveguides.

[0024] FIG. 3 shows a communications system comprising a transmitter 100, an amplifier 60 fabricated by the inventive method, and a detector 200. The amplifier 60 has larger dimensions than planar waveguides made using conventional processing. These dimensions enable more efficient coupling with optical fibers 110a, 110b. Couplers 55, 75 are used to connect the planar waveguide 60 to input 110a and output 110b fibers. Advantageously, these couplers have the configuration described in applicant's co-pending US patent application Serial No 09/663,014, entitled "Article Comprising a Multimode Optical Fiber Coupler".

[0025] More particularly, the couplers 55, 75 each comprise a plurality of fibers with claddings that are tapered from zero thickness at the first ends of the fibers to a final thickness at the second ends (or "cladded ends") of the fibers. At the first ends of the fibers (also referred to herein as the "core exposed ends"), the core is exposed *i.e.* there is no surrounding cladding. The ta-

pered fibers are arranged so that their core-exposed ends are bundled together. The bundle is preferably formed into a single rod such as by fusion to define bundles 51, 71, respectively, of couplers 55, 75. The bundled, fused ends are coupled to the cores of the optical fibers 110a, 110b, carrying the transmitted signal.

[0026] At the input end, a free space combiner 54 is used to combine signals from a pump input fiber 50 and signal input fiber 52 which are directed into the first fiber coupler 55, having bundle 51 at the input end. The plurality of fibers comprising the bundle 51 have claddings that are tapered outward, so that the fibers in the bundle are splayed into individual fibers 57a, 57b,...,57d, and coupled to an array of large dimension waveguide strips 61a, 61b, 61c, 61d of the planar waveguide amplifier 60. The second coupler 75 is connected at the output of the planar waveguide 60 with light from each of the waveguide films being directed into individual splayed fibers 77a, 77b,..., 77d, that are tapered down into fiber bundle 71. Light from bundle 71 could be directed into output fiber 72 toward receiver 200, and/or a splitter 74 may be disposed in the output path. The receiver bundle 71 can be optimized independent of the input constraints. According to another aspect of the invention, the receiver bundle 71 is continued as a "fiber bundle transmission line" (not shown) to a remote location and/or to the detector. This approach may be advantageous in that smaller cores will produce less dispersion than larger cores, as they support fewer modes.

[0027] The cores of the optical fibers 110a, 110b, may be relatively large, *e.g.*, greater than 50 μm, and multimode collection fibers may be used and coupled to the planar waveguide amplifier. Yet, there is little or no loss with this configuration. The number of fibers used in the bundles, the dimensions of the fiber cores and planar waveguides, the degree of taper, the composition of the components, and other design considerations may be adjusted depending on the application as one skilled in the field would appreciate. In matching the coupler with the planar waveguides and/or multimode fiber, a matching consideration is that the cross-sectional area of the core, times the square of the numerical aperture, optimally should be the same on both sides of a juncture. In other if "A" denotes the cross-sectional core area for signal input or output and NA is the numerical aperture, then $A \times (NA)^2$ should be substantially constant throughout the system.

[0028] The invention is advantageous in that planar waveguides may be more efficiently fabricated and also, they may made with larger dimensions to reduce the vertical dimension mismatches and allow for coupling of planar waveguides with multimode collection fibers and other large core fibers. Planar waveguide amplifiers may be more highly doped than optical fiber amplifiers. Additionally, in multimode applications, dispersion is an important factor as an increase in modes results in greater dispersion. With this invention, there is no modal noise penalty in the amplifier, beyond the modal dispersion in the individual waveguides, which is small, given the dimensions of the waveguides. Additionally, with the invention an increase in the input image size does not impact upon (*e.g.*, cause or increase) a modal noise penalty. By providing low-dispersion optical amplification, the invention increases the flexibility of the system with regard to use of photodetectors. Using conventional systems, avalanche diodes are too slow for 10 Gbit/sec detection (per channel), and while PIN diodes are fast enough, they are not sufficiently sensitive. Low-dispersion optical amplification addresses these problems with conventional systems by enabling use of avalanche diodes as photodetectors.

[0029] With this invention, the amplification of individual waveguides 61a ...61d may be manipulated to compensate for or create possible patterns in the image. Also, the planar waveguides may be structured to reduce dispersion. It is beneficial to utilize a narrower core in the planar waveguides (*i.e.*, in the height dimension parallel to the substrate surface and transverse to the propagation direction), to support fewer modes and hence, cause less dispersion. The waveguide amplifier structure 60 may be pumped in a cladding-pumping mode from the side by one or more extended cavity laser pumps schematically illustrated at boxed region 80 (FIG. 3). This edge-pumping scheme may be helpful in increasing pumping efficiency -- the pumping efficiency of planar waveguides is typically lower than that of optical fibers. The cladding of the planar waveguide may be so shaped and dimensioned as to confine the edge-pumped radiation, *e.g.*, it may be a ring-shaped or serpentine cladding arrangement.

[0030] It is understood that the embodiments described herein are merely exemplary and that a person skilled in the art may make variations and modifications without departing from the scope of the invention.

Claims

1. A method for making a planar waveguide comprising a waveguide strip on a waveguide substrate, the method comprising the steps of:

   providing a workpiece comprising a layer of material suitable for use as the planar waveguide strip;
   patterning the layer so that the workpiece comprises a base portion and at least one protruding portion, wherein the protruding portion corresponds substantially in dimension to the waveguide strip to be fabricated;
   forming a cladding layer on the workpiece overlying the protruding portion; and
   attaching the cladding layer to the substrate.

2. The method of claim 1 further comprising the step of removing the base portion of the workpiece after

attaching the cladding layer to the substrate.

3. The method of claim 1 or claim 2 wherein the substrate comprises a dielectric layer and the cladding layer is attached to the dielectric layer.

4. The method of claim 1, 2 or 3 wherein the layer of waveguide strip material comprises aluminosilicate.

5. The method of claim 3 wherein the dielectric layer comprises silica.

6. The method of any preceding claim wherein the patterning step comprises wet etching.

7. The method of any preceding claim wherein the patterning step comprises etching portions of the layer to define at least one protruding portion having a height dimension greater than 5μm.

8. The method of claim 7 wherein the patterning step comprises etching portions of the waveguide strip layer to define at least one protruding portion having both height and width dimensions of greater than 5μm.

9. The method of claim 8 wherein the patterning comprises etching portions of the waveguide strip layer to define at least one protruding portion having both height and width dimensions greater than 10μm.

10. The method of any one of claims 2 to 9, further comprising a step of depositing a second cladding layer over the protruding portion.

11. A method for making a planar waveguide structure comprising the steps of:

providing a bulk disk of a material suitable for use as the waveguide strip;
etching selected portions of the disk so that the disk comprises a base portion and at least one protruding portion, wherein the protruding portion corresponds substantially in dimension to the waveguide strip:

forming a first cladding layer on the top surface of the protruding portion;
attaching the first cladding layer to a substrate; and
removing the base portion of the bulk disk.

12. The method of claim 11 wherein the bulk disk comprises glass doped with a rare earth dopant.

13. The method of claim 11 or 12, further comprising a step of depositing a second cladding layer over the protruding portion.

14. An optical communications system including a planar waveguide fabricated according to any preceding claim.

FIG. 1

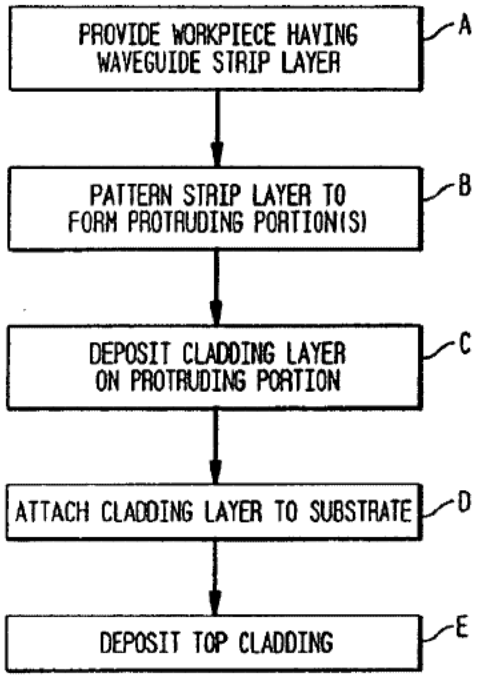
PROVIDE WORKPIECE HAVING WAVEGUIDE STRIP LAYER
A
PATTERN STRIP LAYER TO FORM PROTRUDING PORTION(S)
B
DEPOSIT CLADDING LAYER ON PROTRUDING PORTION
C
ATTACH CLADDING LAYER TO SUBSTRATE
D
DEPOSIT TOP CLADDING
E

FIG. 2A

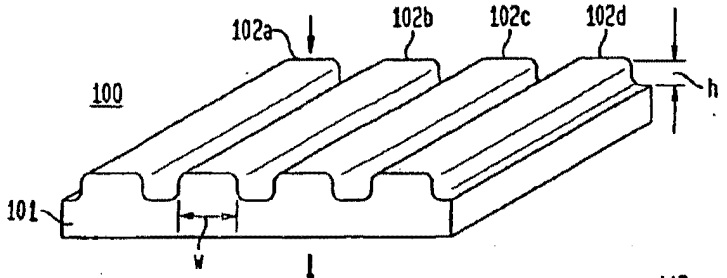

FIG. 2B

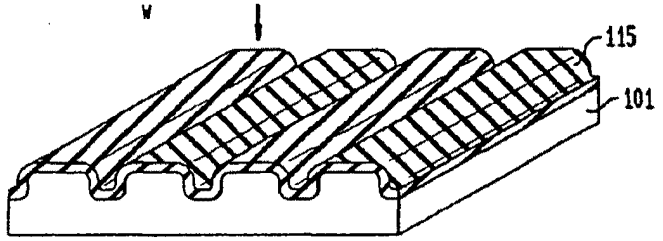

FIG. 2C

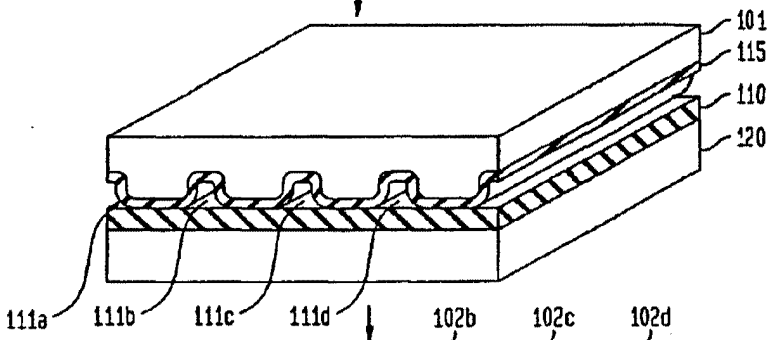

FIG. 2D

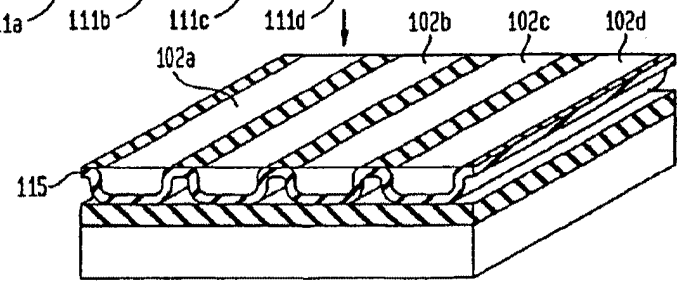

FIG. 2E

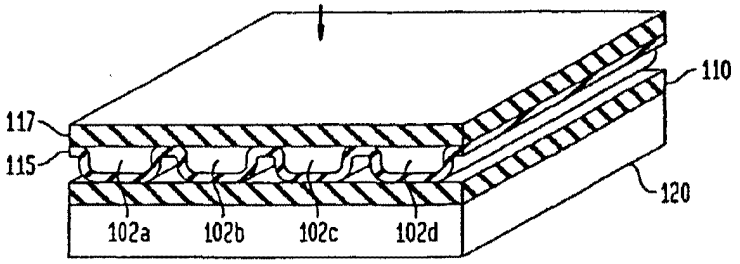

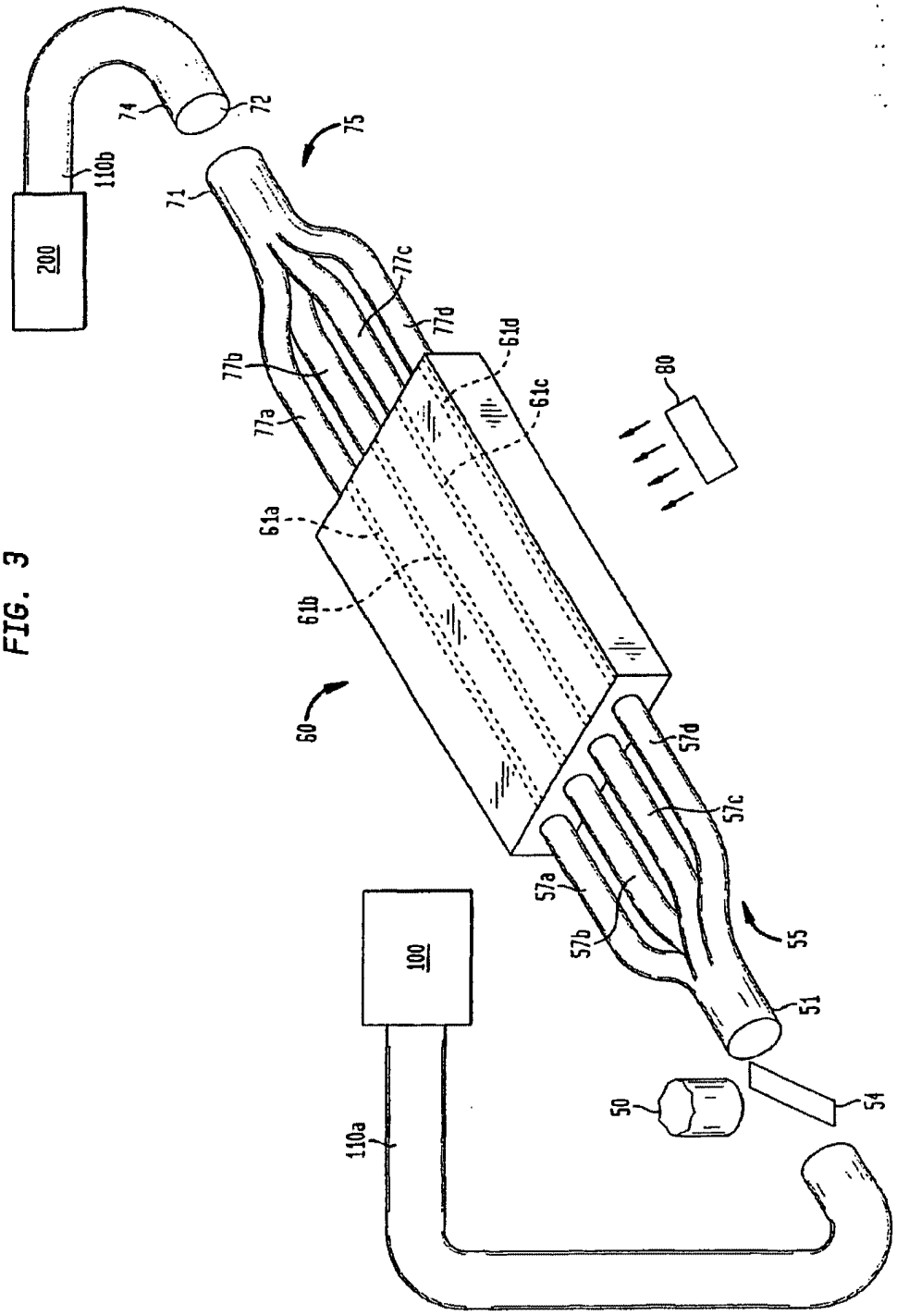
200
110b
74
72
71
75
77c
77d
61d
77b
61c
77a
61a
61b
60
80
57d
57c
57a
57b
55
100
51
50
54
110a

FIG. 3

aurigin

Document Summary

New Search Help

Preview Claims
Preview Full Text
Preview Full Image

Email Link:

Document ID: JP 02-054764 A2
Title: DEVICE FOR COATING SUBSTRATE WITH INSULATOR
Assignee: LEYBOLD AG
Inventor: SCHERER MICHAEL
LATZ RUDOLF
PATZ ULRICH
US Class:
Int'l Class: C23C 14/35 A
Issue Date: 02/23/1990
Filing Date: 06/22/1989

Abstract:

PURPOSE: To prevent the hindrance of the electrification on a target, by superposing the output voltage of an AC power source on the DC voltage of a DC power source and specifying the voltage of the AC power source to be applied on electrodes.

CONSTITUTION: The magnetron sputtering device is provided with the AC power source, which outputs voltages to be superposed on the DC voltage of the DC power source. The output of the AC power source impressed on the electrodes connected to the target is regulated to 5 to 20% of the output supplied to the electrodes by the DC power source. A high-frequency power source is used as the AC power source. As a result, an insulator, such as Al2O3, is deposited on the substrate at a high rate without receiving the hindrance by reactive sputtering.

(C)1990,JPO

⑲日本国特許庁（JP）　⑪特許出願公開

⑫公開特許公報（A）　平2-54764

⑤Int. Cl.⁵　識別記号　庁内整理番号　㊸公開　平成2年(1990)2月23日
C 23 C 14/35　8520-4K

審査請求　未請求　請求項の数 17　（全9頁）

㊹発明の名称　基板を絶縁体で被覆する装置

㉑特　願　平1-158479
㉒出　願　平1(1989)6月22日
優先権主張　㉜1988年6月23日㉝西ドイツ(DE)㉛P38 21 207.2

⑫発明者　シエーラ・ミヒヤエル　ドイツ連邦共和国　ローデンバツハ　D-6458　リンデンシユトラーセ　12
⑫発明者　ラツツ　ルドルフ　ドイツ連邦共和国　フランクフルト　D-6000　マインツアー　ラントシユトラーセ　326
⑫発明者　バツツ　ウルリツヒ　ドイツ連邦共和国　リンゼンゲリヒト　2　D-6464　ヴアルトシユトラーセ　26
⑪出願人　レイボルト　アクチーエンゲゼルシヤフト　ドイツ連邦共和国　ハウナ　1　D-6450　ビルヘルム-ローン・シユトラーセ　25
⑭代理人　弁理士　鈴木　弘男

明　細　書

1．発明の名称

基板を絶縁体で被覆する装置

2．特許請求の範囲

（1）　ターゲットに接続された電極に接続された直流電源を有し、前記ターゲットから放出された粒子が基板上に堆積される導入物質との化合物を形成し、前記ターゲットには環状磁界が印加され、その磁力線は陰極部分においてターゲットの表面から出ていく、基板を絶縁体で被覆する装置において、前記直流電源の直流電圧に重畳される電圧を出力する交流電源を設け、前記電極に印加される前記交流電源の出力を前記直流電源によって前記電極に供給される出力の5％ないし25％にしたことを特徴とする装置。

（2）　前記交流電源が高周波電源である請求項1に記載の装置。

（3）　前記高周波出力は前記直流出力の10％である請求項1または2に記載の装置。

（4）　前記直流電源が第1および第2のインダクタを介して前記電極に接続された請求項1に記載の装置。

（5）　前記交流電源がコンデンサを介して前記電極に接続された請求項1に記載の装置。

（6）　前記直流電源と前記第1のインダクタとの間に一端を接地電位にしたコンデンサを接続した請求項4に記載の装置。

（7）　前記第1のインダクタと第2のインダクタとの間に一端を接地電位にしたコンデンサを接続した請求項4に記載の装置。

（8）　第1のコンテナと、この第1のコンテナの中に配置される第2のコンテナとを有し、第2のコンテナはダイヤフラムとしての開口を有し、被覆される基板は前記開口を通して前記ターゲットと対向し、1またはそれ以上の気体が第1および第2のコンテナの間の空間に導入される請求項1に記載の装置。

（9）　前記交流電源が13．56MHzの交流電圧を与える請求項1に記載の装置。

（10）　前記ターゲットはアルミニウムから成

り、前記基板上に堆積される層はAl_2O_3から成る請求項1に記載の装置。

（11） 前記ターゲットはドーピングされたたとえば導電性シリコンから成り、前記基板上に堆積される層はSiO_2から成る請求項1に記載の装置。

（12） 前記ターゲットはアルミニウムから成り、前記基板上に堆積される層はAlNから成る請求項1に記載の装置。

（13） 前記ターゲットはドーピングされたたとえば導電性シリコンから成り、前記基板に堆積される層はSi_3N_4から成る請求項1に記載の装置。

（14） 前記直流電源がターゲット物質の種類に応じて作動され、電流、電圧または出力電力が調整される請求項1に記載の装置。

（15） ターゲットにAl、SiまたはSnが使用されたときは、前記直流電源が優先的に作動されて電圧が調整される請求項1に記載の装置。

（16） アルゴン／酸素の雰囲気のもとで、Al、Si、Sn、In／Snのターゲットがスパッタリングされるときは、前記直流電源が作動され電圧が調整される請求項1に記載の装置。

（17） アルゴン／窒素の雰囲気のもとで、Al、Siのターゲットがスパッタリングされるときは、前記直流電源が作動され電圧が調整される請求項1に記載の装置。

3．発明の詳細な説明

（産業上の利用分野）

本発明は、基板を絶縁体で被覆する装置、とくにターゲットに電気的に接続された電極に接続された直流電源を有し、前記ターゲットから放出され微粉化された粒子が基板上に堆積される化合物を形成し、前記ターゲットには閉状磁界が印加され、その磁力線は陰極部分においてターゲットの表面から出ていく装置に関する。

（従来技術）

スパッタリングまたは粉状化プロセスを用いて基板を金属で被覆することは、金属が良導電体であるため、比較的簡単である。しかし、導電性が全くないかあるいは非常に低い酸化物の層で基板を被覆することは非常に難しい。この困難さにもかかわらず、基板上に酸化物および他の絶縁体を堆積させるためには、直流スパッタリング手段を用いて金属粒子を発生させ、それらを反応的な雰囲気下で酸化物に転化し基板上に堆積させている。

この処理において、金属粒子の酸化物への転化は基板のすぐ近くであってスパッタリング陰極から離れた所で起こる。これは陰極上に酸化物が堆積しそれに伴なってスパッタリング率が低下するのを防ぐためである。それにもかかわらず、実際には陰極に酸化物を全く付着させないことはできず、スパッタリング率は徐々にかなり低下する。

スパッタリングがマグネトロン陰極を用いて行なわれるときは、磁力線の曲率が最大であるところでスパッタリングは最も激しく、スパッタ痕が発生する。これらの場所における激しいスパッタリングは酸化物の堆積を防止する。ターゲットのこれらの部分は全くスパッタリングされないかまたは非常にゆっくり行なわれる。しかし非導電性の誘電体膜が反応雰気体の影響のもとで形成される。これらの成長部分は静電気的に帯電され、ターゲット表面上の同時放電の開始点となり、結局、ターゲットとプラズマまたはターゲットとターゲットの周りの物質との間の放電の開始点となる。放電中は放電アークを消すために陰極電流を一時的に減少させなければならない。しかし、それによって放電が最終的にやむまで不安定状態が生じる。

直流電流によるマグネトロン・スパッタリングにおいては、純粋な二極管スパッタリングとは対称的にターゲットに反応生成物が部分的に付着するのを防ぐことはできず、せいぜい磁界を最適化して低くおさえることができるだけである。

この問題を解決するための手始めとして、直流電圧の代りに周波数の高い交流電圧をターゲット電極と基板との間に与えることがある。反応的な

雰囲気下でこの高周波マグネトロン・スパッタリングを行なえばターゲット表面での放電も起こらないし、静電的な帯電も起こらない。しかしながら、純粋な高周波スパッタリングにいおては、スパッタリング率が比較的低い。

しかし、高周波電圧を重ねた直流電圧を用い、基板上にタンタルおよびタンタル酸化物を堆積させるスパッタリング処理も知られている（F. Vratny「高周波を重ねた直流スパッタリングによるタンタルおよびタンタル酸化物の堆積」1968年10月 7日～11日薄膜誘電体に関する会議資料、J. Electrochem. Soc. 114-5,505,1967 からの再複製）。直流電流と交流電流が結合された電界はプラズマ密度を高め、反応的スパッタリング中に陰極上に誘電体膜が形成されるのを防止する。それにより、0．5～2ミリトルのスパッタリング圧力下で約80Å／分のタンタル堆積率を達成することができ、10～20ミリトルの圧力下ではタンタル堆積率を2倍に増大させることができる。純粋な酸素の下における反応的スパッタリングの過程では、Ta_2O_5およびMnO_2を被覆するのに50～100Å／分の堆積率が得られる。

この堆積率の増加は、高周波電界においては帯電粒子が振動運動を行なうという事実によって説明することができる。重畳電界の影響により移動する電子は直流電界中における電子よりも長い距離を移動する。この長い移動距離は電子と気体原子との衝突の確率を増加させ、これは与えられた圧力下での陰極への正イオンの流入密度を増加させることになる。このことはスパッタリング率および層堆積を増加させる効果をもつ。気体中で電子がどのように反応するかは、気体圧力すなわち電子の自由路長、高周波電界の周波数および電極配置に依存する。低い圧力のもとでは、平均自由路長が電極間の距離より長ければ、電子は励起されてほとんど気体との衝突なしに電極間を移動する。たとえば10ミリトルの圧力のもとではアルゴン中の電子は0．4eVのエネルギーを有し、平均自由路長は従来の電極間の距離とほぼ一致する10cmである。電子の平均自由路長が電極間の距離より短い圧力のもとで電界の周波数が気体の衝突周波数より低いときは、電子は各々振動して数回衝突し、電界の位相に合わせて移動しようとする。この例としては低周波交流スパッタリングおよび低周波直流／交流スパッタリングがある。このとき電子は連続して陰極および基板に突入する。高い周波数では電子は気体の衝突の間で小さな振幅で多く振動することができる。この場合電子は静止しているようにみえ、その結果強力なプラズマができる。このプラズマは重畳された直流電界で引き上げることができる。さらに高い周波数たとえばマイクロ波の範囲では、電子は電気的および磁気的成分を有する定在波の影響を受ける。この影響のため、電子は空間の条件たとえば電極寸法の関数および定在波を発生する周波数などに応じて空間中で分散する。

さらに、高周波電界があるため、電気的な負性気体による反応的スパッタリング中に陰極上に誘電体の被覆が堆積するのを防止する。イオン濃度は高周波電界を通して維持され、陰極への電子の衝突は大量の絶縁被覆が形成される可能性を減少させる。イオン化の確率が増え、気体の絶縁破壊強度が小さくなることにより、高周波電界においては二極管スパッタリング中の通常の圧力より低いスパッタリング圧力のもとで作用することができる。

上述した公知の装置は二極管スパッタリングあるいは二極管粉状化に関するものである。それはまた直流および交流電圧を電極に印加する公知の装置にも言えることである。しかし、二極管スパッタリングは仮に交流の重ね合せを利用したとしても多くの適用例において堆積率が低いという欠点がある。マグネトロン陰極を用いた上記スパッタリングは実質的により高いスパッタリング率を有する。

マグネトロン・スパッタリングとマイククロ波放射を結合することもまた公知である（米国特許461077O号＝ヨーロッパ特許014850 4号）。この場合のマイクロ波放射は、マグネト

ロン電極の環状力線が位置している所だけターゲットがスパッタリングされないのを防止しようとするものである。このようにスパッタリング率を上昇させ、ターゲットの腐食を狭い限られた部分だけでなく防止するために、スパッタリング領域をかなり増加させる。この目的を達するために、同軸状に配置された2個の永久磁石を用いてミラー磁界を発生させる。このとき磁石間では磁力線が拡散し、磁石の近くでは再び収縮する磁束分布となる。この場合の欠点は中空の導波管または同等の手段を用いたマイクロ波の放射が高価であること、また永久磁石の構造が複雑であることである。

さらに、基板ホルダとターゲットホルダが高周波の高電圧電源と接続され、－30Vから－100V好ましくは－70V±10Vのバイアス電圧がスパッタリング手段によって得いドープ金属層を製造する方法が知られている（ドイツ特許290980 4号）。この方法は電気的性質が正確に定義された抵抗層の再現可能な堆積に関するもので、ここでは上記抵抗層は純粋な二極管高周波スパッタリングによって製造される。この公知の方法は良導電体である化合物が放出されるので、アークの問題に関するものでなく、さらに直流電源も使用されない。

さらに、中和装置を有するイオンビーム処理装置が知られている。この装置では基板ホルダおよび／またはターゲット上の電荷が不確定な状態になるのを避けるため、中和装置が熱放出電子の形成で使用され、さらに正電位が基板および／またターゲットに印加される。反応的スパッタリングの問題とくに絶縁体の反応的スパッタリングの問題については触れていない。

アルミニウムをエッチングする別の二極管方法によれば、直流電源および高周波発生器が並列に接続され、これらの共通の出力電圧は2つの相体する電極に印加される（ドイツ特許3140675号）。このケースの場合も運動量の伝達による反応的なスパッタリングの問題は述べられていない。

（発明の目的および構成）

本発明は永久磁石の磁力線が環状に形成されてスパッタリングされる物質に印加される従来のマグネトロン・スパッタリング装置において、ターゲット上の帯電が妨げられるのを防止することを目的とする。

この目的を達するために、直流電源の直流電圧に交流電源の出力電圧を重ね、電極に与えられる交流電源の電圧を、直流電源によって電極に与えられる電圧の5％ないし25％にするように構成した。

本発明によって得られる利点は、SiO_2、Al_2O_3、Si_3N_4またはAlNなどの絶縁体を従来のマグネトロン陰極を用いた反応的スパッタリングを使って何ら妨害を受けることなく高い率で堆積できるということである。

反応的直流スパッタリングの全ての利点は保有されている。なぜなら、重畳高周波成分はターゲット上の電位差を減少させ、それによりターゲット上で帯電効果を妨害することは避けられる。このため永久アークにより放電が終了することが保証される。このことは高周波成分が、第1にプラズマ密度を増加させることによってスパッタリング率を増加させ、第2にターゲットの非導電領域から離れたスパッタリングに役立つという意味ではない。むしろ反応的マグネトロン・スパッタリング中に不可避的に形成される非導電性のターゲット部分上に帯電効果の妨害を生じさせないということである。このため、直流電圧はターゲット上の帯電効果の妨害を避けるように高周波電圧によって変調される。

（実施例）

以下、本発明の一実施例を図面に基づいて詳細に説明する。

第1図には基板1が示され、この基板1には絶縁体の薄い層2が設けられる。基板1に対向してスパッタリングされるべきターゲット3が配置されている。ターゲット3は断面がU時形のエレメント4を介して電極5と接続されている。電極5はヨーク6上に接地され、ヨーク6とエレメント

4との間には永久磁石7，8，9が設けられている。

永久磁石7，8，9の磁極は、外側の2つの永久磁石7および9のS極と真中の永久磁石8のN極がターゲット3を通してほぼ円弧状の磁界を形成するように、ターゲット3に交互に向けられている。この磁界はターゲット3の前のプラズマを圧縮して、磁界がその円弧の最高点のところで磁界の密度が最大になる。プラズマ中のイオンは、直流電源10から供給される直流電圧により形成される電界によって加速される。直流電源10のマイナス極は2個のインダクタ11および12を介して電極5に接続されている。電界はターゲット3の表面と垂直に形成され、プラズマの正イオンはターゲット3の方向に加速される。これによって、多数の原子や粒子がターゲット3から放出される。とくに領域13および14から放出され、そこで磁界は最大となる。放出された原子または粒子は基板1の方向へ移動し、薄い層2となって堆積される。

ターゲット物質が金属であって基板上に酸化膜を被覆するときは、ターゲット3から放出された粒子は空間15において特定の気体と反応する。この気体はガスタンク16および17からバルブ18，19およびパイプ22，23を経て、入口弁20，21を介して空間15に導入される。この空間15は2つのコンテナ24および25によって形成され、コンテナ25は基板1を収容し、他方のコンテナ24は基板1の前で終わり、ダイヤフラム26を形成している。コンテナ24，25およびコンテナ25の底に載置された基板1は共に接地されている。直流電源10の第2の極27もまた接地され、第1の極28はインダクタ11および12から離れてコンデンサ29に接続され、コンデンサ29は接地されている。

さらに、端子31を有する高周波電源30は直流電源10のそばにあって、可変コンデンサ33および34を介して電極5に接続されている。可変コンデンサ33および34の接続点にはインダクタ35の一端が接続され、その他端は接地されている。インダクタ11および12の接続点はコンデンサ32に接続され、コンデンサ32は接地されている。高周波電源30の第2の端子36も接地されている。

コンデンサ29および32とその間に接続されたインダクタ11とによって高周波の通過を妨げるローパスフィルタを形成している。インダクタ12によってその効果をさらに強めている。コンデンサ33および34とインダクタ35によって高周波を陰極5に印加する回路を形成している。これらは同時にバイパスフィルタとして機能する。すなわち直流電圧は高周波電源30には印加されない。

第1図の装置のおける気体は実際には第1および第2のコンテナ25および24の間の空間に入るが、それは陰極5の周りのガス分配システムを通して第2のコンテナ24へ導入することもできる。

第1図の装置を制御するために、測定データおよび出力制御命令を処理する処理制御コンピュータが用いられる。この処理制御コンピュータにたとえば処理室25内の分圧の測定値が与えられる。これらのデータおよび他のデータに基づいて、コンピュータはたとえばバルブ18および19を通って流入する気体を制御し、陰極5における直流と交流の電圧の割合を設定する。処理制御コンピュータは他の全ての変数たとえば陰極電流、高周波出力および磁電強度を制御することができる。このような処理制御コンピュータはよく知られているので、その構成についての説明は省略する。

第1図には高周波の供給がどのように調整されるか示されていない。しかし、特定の値を予め設定し出力が常にこの設定値に調整されるように調整回路を構成することは公知である。

第2図は直流だけによるスパッタリング中に生じた過程を示す図である。これらの過程は以下に説明する本発明による装置の実施例の作用を理解する上で重要である。第2図は気体圧力が7×

10^{-3}ミリバールのアルゴンの純不活性ガスの雰囲気下のものであり、この図から直流陰極電流は明らかに直流陰極電圧の関数であることがわかる。電圧の上昇に伴ない導電性プラズマが形成されて抵抗値が減少するので、電流J＝f（U）はほぼ放物線状に増加する。スパッタリング率RはÅ／Sで表わされ、スパッタリング出力の増加に伴ない直線的に上昇し、直線R＝f（Pel）によって表わされる。出力密度10W／cm^2に対応するスパッタリング出力が440Wのとき、スパッタリング率は50Å／sである。

第3図には、陰極電圧の関数としての陰極電流および直流のときに予め設定したアルゴンおよび酸素流入の場合における酸素分圧と陰極電圧の相関が示されている。第3図の測定曲線は酸素の流量f_{O_2}が6．7SCCM／分で一定のときに記録されたものである。ここでSSCM／分は標準的なcm^3／分と一致する。

第2図とは対照的に、第3図は反応的な直流スパッタリング時の状態を示している。電流－電圧特性から電圧を増加させたときの電流Jは依然として明らかに電圧の関数であることがわかる。電圧を増加させると電流は初め非常に急激に上昇するが、その後最大値に達し、そこから減少し次いで再びいく分増加する。しかし、電圧を約600Vの高電圧から減少させると、電流は初め電圧の減少に伴ない減少する。しかし、最初の金属ターゲットの状態を仮定すると、電圧がさらに下がると電流は大きく上昇し、このとき基板上の酸化物の形成は増加していることがわかる。350V以下になると、電流は再び急に減少し、酸素分圧が大きく上昇する。約450Vから350Vまでの範囲では、ターゲット上に堆積するAl_2O_3の2次電子発生量は、アルゴンイオンの衝撃によって上昇する。これとは対照的に、350V以下においてはターゲットは酸素分子で被覆されターゲット上にAl_2O_3が形成されることはない。この酸素分子はアルゴンの衝突イオンによって放出され、2次電子効果は低下する。反応的直流動作の欠点は、基板上に吸収のない層を形成する陰極電圧の範囲（約300Vないし400Vの範囲）が不安定な範囲であることであり、その中で作く後に火花やプラズマ損失が起こる。したがって動作点を早く動かして放電が止まらないようにしなければならない。

すでに述べたように、陰極電流Jは明らかに陰極電圧の関数であり、各々の電圧値には確実に1つの電流値が対応する。しかし、その逆は言えない。もし第3図の縦軸と横軸を交換し、縦軸に電圧Uをとり、横軸に電流Jをとると、電圧曲線は1つの電流値が2つの電圧値をとるS字形を描く。

第4図には酸素分圧および直流電流の陰極電圧の関数としての放電電流が第3図と同じ条件のもとで示されているが、今度は高周波変調された陰極電圧が使用されている。ここでの変調周波数は13．56Hzであり、高周波の振幅は140V、陰極における有効電力は一定で20Wである。吸収のないAl_2O_3の層は425V以下で得られ、これは第3図の純直流電流の場合と似ている。しかし、放電は完全に安定しておりアークはない。実験では約420Vの動作点において、放電は火花が起こることなく数時間行なわれた。500Vから350Vの間では第3図および第4図の電圧－電流特性は数パーセント以内の偏差で一致している。第3図と比べると、第4図で観察することができる連続した強い電流の増加は次のように説明できよう。すなわち、高周波成分は初めターゲット表面上の酸素分子の吸収を防止するが、2次電子の発生量の増加は邪魔されない。2次電子が増加すると確かに衝突によるイオン化を通してイオン流量が増加するが、初めは陰極からの電子流量が増加することによってイオン流量が増加する。この効果は動作範囲を広げスパッタリング率は電圧の低下に伴ないわずかしか変化しない。この電圧低下は酸素分圧の比較的わずかな増加によって示される。420Vの動作点ではAl_2O_3のスパッタリング率は約470Wの電力で25Å／秒であり、これは純粋な金属の場合と比較すると半分に低下しただけである。280

Ｖ以下では電流は大きく減少し、これはスパッタリングの酸素による被覆および低い電圧におけるスパッタリング効果の減少のためである。５００Ｖ以上では高周波成分を有する電圧で流れる電流は第３図の純直流電流の場合より小さい。明らかにここではプラズマの影響を受けている。

第５図は電極５に印加される変調電圧を示している。これは－４２０Ｖの直流電圧に振幅１４０Ｖの高周波電圧を重ねたものである。この電圧は処理室のアルゴン圧が７×１０$^{-3}$ミリバールのとき、アルミニウムがスパッタリングさら酸素との酸化が起こる場合は、優先的に印加される。高周波の有効電力は２０Ｗに設定され電極５を流れる直流電流は約１．１４Ａである。

第６図は純アルゴン雰囲気下における電流電圧特性を示し、ここにはプラズマについての高周波の効果がはっきり示されている。純直流動作における電流電圧特性を示す測定値はＸ印で表わされ、変調電圧での電流電圧特性を示す測定印は○印で表わされている。陰極５での高周波電力はここで約２０Ｗである。この有効電力は純直流の場合および高周波の場合のスパッタリング率を比較して決定された。第６図においては２つの本質的な事項が認められる。すなわち、直流マグネトロン放電のための典型的な電力密度１０Ｗ／cm^2（第６図においては約６００Ｖ／０．８Ａ）から開始して、同一の直流電圧のときの直流の放電電流は重畳高周波電力２０Ｗのときすでに、ゼロになっている。すなわち、変調振幅が約１４０Ｖのとき電流は０．１８Ａだけ減少する。

陰界に支持された直流マグネトロン放電用として、直流電圧の約５％の高周波変調は強烈な効果を有している。直流出力電力は約１００Ｗ（＝２．３Ｗ／cm^2）減少される。明らかに高周波電界は陰極５の前で循環している電子のドリフト電流を妨害する。高周波電界に追随できる電子はさらに陰極５から取り除かれる。このことは電子の衝突確率が減少することを意味する。これと関連して電子のドリフト損失も減少する。

この結果は純二極管スパッタリング動作中のブラトニー（Vralny）の観測と矛盾する。それによれば二極管高周波変調された直流電圧が印加されると、直流放電電流が著しく増加するという。ブラトニーによって示された高周波電力約２００Ｗは所与の直流電流および高周波電力の約４３％である。これが実際に陰極上に効果のある高周波電力であるかどうかは述べられていない。

第６図において、直流陰極電圧の減少に伴ない、高周波変調のときの直流放電電流はゆっくりと減少を続ける。３５０Ｖ以下のときの直流放電電流は純直流の放電より大きい値である。純直流電流の放電は２９０Ｖでなくなるが、高周波変調放電の直流成分は減少して純高周波放電の固有直流電位である１４０Ｖでゼロになる。

このようにマグネトロンの場合、純高周波の放電の直流電位と純直流の放電範囲との間において、高周波変調の直流を用いた場合、直流電流成分の増加が観察される。反応的処理にとって２番目に重要であるこの範囲において、高周波放電の高いイオン化効果が決定される。

純二極管スパッタリングにおけるブラトニーによる結論および観察は一般に本発明にとってはあまり重要ではないこの効果に関連している。

定電力の高周波変調による直流マグネトロン放電で広い範囲において、直流電流を減少させることのほとんど予見できず実際には歓迎されない効果は、反応動作中に増加された第２電子発生量によりターゲットを部分的に酸化することで十分補償される。この効果の程度は使用される物質および気体に依る。アルゴン／酸素の雰囲気中におけるＡℓ，Ｓｉ，ＳｎおよびアルゴＬ／窒素の雰囲気中におけるＡℓおよびＳｉについてはその効果は実験によってすでに確認ずみである。

４．図面の簡単な説明

第１図は本発明による装置の基本的構成図、第２図は公知の直流マグネトロン・スパッタリング装置において圧力７×１０$^{-3}$ミリバールのもとで、陰極電圧の関数としての陰極電流、スパッタリング率およびスパッタリング出力を示す図、第３図はアルゴン圧７×１０$^{-3}$ミリバール、酸素流

量6．7SCCM／分で一定およびアルミニウムのターゲットのもとにおける直流陰極電圧の関数としての陰極電流および酸素分圧を示す図，第4図はアルゴン圧7×10⁻³ミリバール、酸素流量6．7SCCM／分で一定、振幅140Vの重畳高周波電圧およびアルミニウムのターゲットのもとで直流陰極電圧の関数としての陰極電流および酸素分圧を示す図、第5図は交流電圧が重ねられた直流陰極電圧を示す図，第6図は純アルゴン雰囲気下において直流陰極電圧および直流電圧と重畳交流電圧との結合電圧の関数としての陰極電流を示す図である。

1…基板、2…絶縁層、3…ターゲット、5…陰極，7，8，9…永久磁石、10…直流電源，24，25…コンテナ、30…高周波電源

特許出願人　レイボルト　アクチーエンゲゼルシャフト

代理人　弁理士　鈴　木　弘　男

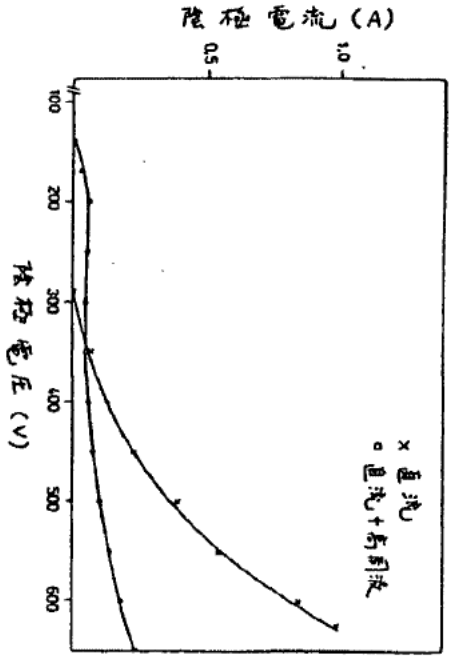

FIG.6

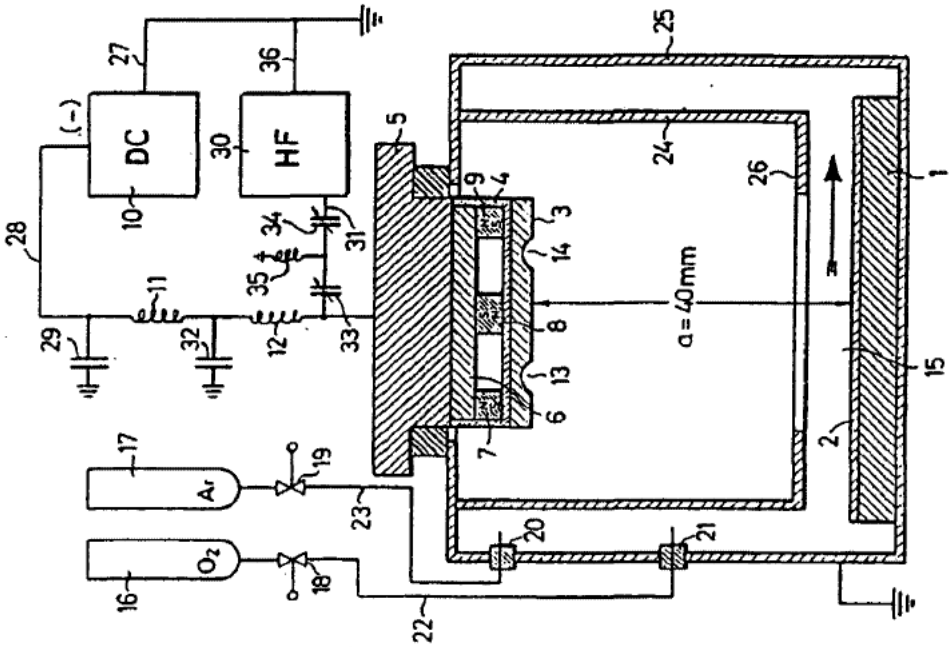

FIG.1

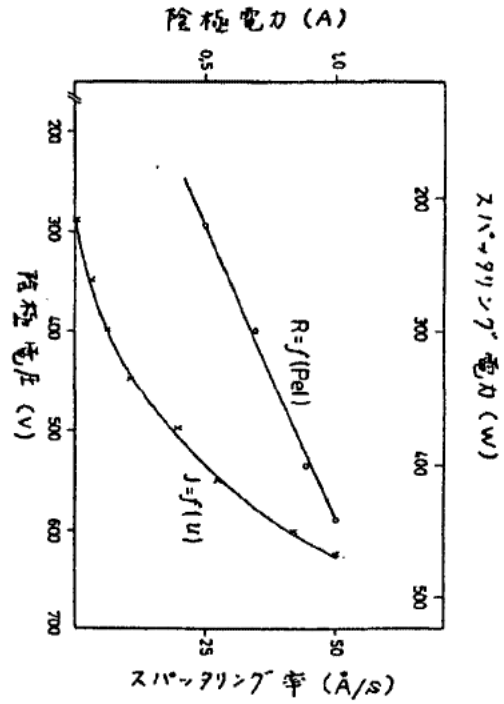

FIG.2

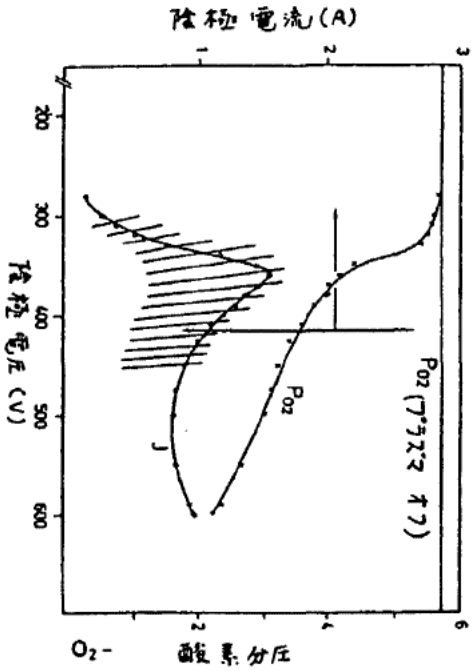

FIG.3

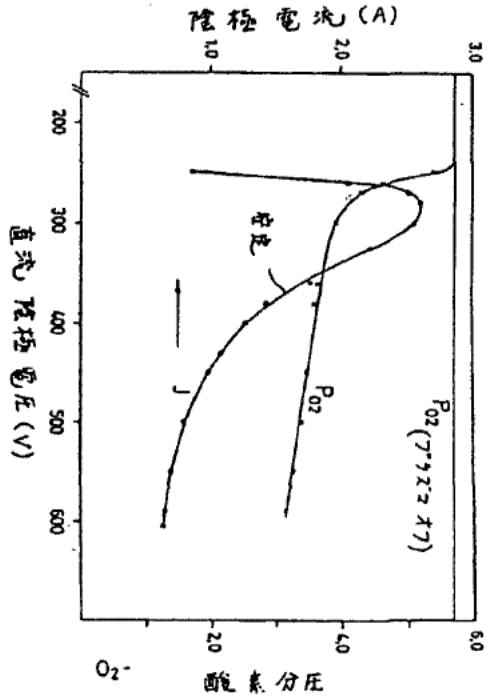

FIG.4

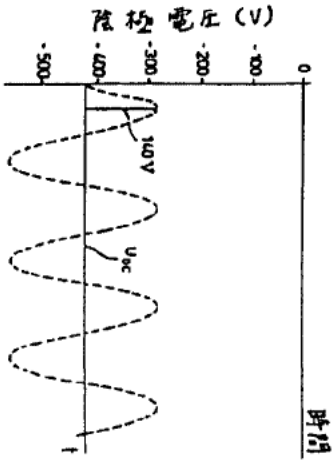

FIG.5

(12) INTERNATIONAL APPLICATION PUBLISHED UNDER THE PATENT COOPERATION TREATY (PCT)

(19) World Intellectual Property Organization
International Bureau

(43) International Publication Date
11 March 2004 (11.03.2004)

PCT

(10) International Publication Number
WO 2004/021532 A1

(51) International Patent Classification[7]: H01S 3/16, 3/063, 3/0933

(21) International Application Number: PCT/US2003/024809

(22) International Filing Date: 27 August 2003 (27.08.2003)

(25) Filing Language: English

(26) Publication Language: English

(30) Priority Data:
60/406,451 27 August 2002 (27.08.2002) US

(71) Applicant (*for all designated States except US*): SYMMORPHIX, INC. [US/US]; 1278 Reamwood Avenue, Sunnyvale, CA 94089-2233 (US).

(72) Inventor; and
(75) Inventor/Applicant (*for US only*): DAWES, David [US/US]; 5861 Castleknock Road, Dublin,OH 43016, (US).

(74) Agent: GARRETT, Arthur, S.; Finnegan, Henderson, Farabow, Garrett & Dunner L.L.P., 1300 I Street, N.W., Washington, DC 20005-3315 (US).

(81) Designated States (*national*): AE, AG, AL, AM, AT, AU, AZ, BA, BB, BG, BR, BY, BZ, CA, CH, CN, CO, CR, CU, CZ, DE, DK, DM, DZ, EC, EE, ES, FI, GB, GD, GE, GH, GM, HR, HU, ID, IL, IN, IS, JP, KE, KG, KP, KR, KZ, LC, LK, LR, LS, LT, LU, LV, MA, MD, MG, MK, MN, MW, MX, MZ, NI, NO, NZ, OM, PG, PH, PL, PT, RO, RU, SC, SD, SE, SG, SK, SL, SY, TJ, TM, TN, TR, TT, TZ, UA, UG, US, UZ, VC, VN, YU, ZA, ZM, ZW.

(84) Designated States (*regional*): ARIPO patent (GH, GM, KE, LS, MW, MZ, SD, SL, SZ, TZ, UG, ZM, ZW), Eurasian patent (AM, AZ, BY, KG, KZ, MD, RU, TJ, TM), European patent (AT, BE, BG, CH, CY, CZ, DE, DK, EE, ES, FI, FR, GB, GR, HU, IE, IT, LU, MC, NL, PT, RO,

[Continued on next page]

(54) Title: OPTICALLY COUPLING INTO HIGHLY UNIFORM WAVEGUIDES

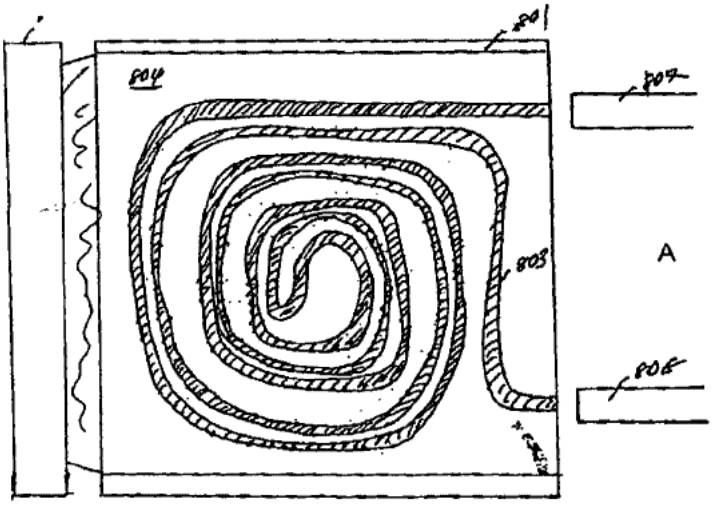

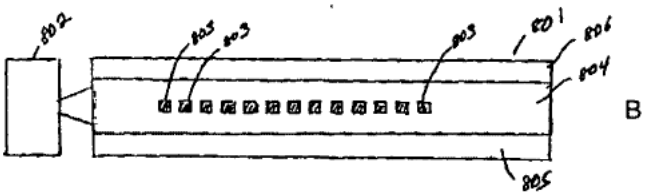

(57) Abstract: In accordance with the present invention, one or more laser diodes (802) are efficiently coupled into a waveguide amplifier (801) in order to provide either an efficient amplifier or a laser. Light from one or more laser diodes (802) is efficiently coupled into one or more waveguides (803) through the effects in the refractive index between the core material of the waveguide and the cladding material (804) around the waveguide. Both the core material (803) and the cladding material (804) can be deposited with a high degree of uniformity and control in order to obtain the coupling.

WO 2004/021532 A1

SE, SI, SK, TR), OAPI patent (BF, BJ, CF, CG, CI, CM, GA, GN, GQ, GW, ML, MR, NE, SN, TD, TG).

Published:
— *with international search report*

For two-letter codes and other abbreviations, refer to the "Guidance Notes on Codes and Abbreviations" appearing at the beginning of each regular issue of the PCT Gazette.

OPTICALLY COUPLING INTO HIGHLY UNIFORM WAVEGUIDES

Background

1. Technical Area

[0001] The present invention relates to coupling of pump light into an optical amplifier or a laser and, in particular, to coupling from a multimode laser diode in order to optically pump an optical amplifier or laser.

2. Discussion of Related Art

[0002] Use of directed energy beams, such as those produced by amplifiers or lasers, are diverse and include applications in a wide range of fields, including biotechnology, medicine, semiconductor processing, manufacturing, image recording and defense. In biotechnology, directed energy beams are used, for example, in flow cytometry, DNA sequencing, confocal microscopy, and hematology. Medical applications include use in ophthalmology, non-invasive surgery, and photodynamic therapy. In the semiconductor industry, applications include wafer inspection, rapid thermal processing, and scribing or marking. Image recording applications include, for example, high-speed printing, photo-processing, film subtitling and holography. Industrial applications include, for example, rapid prototyping, materials processing and scribing or marking. Additionally, military applications include range finding, target designation, lidar, and chemical or biological threat detection. The graphics and printing industry, one of the largest businesses in the world, has a need for inexpensive laser systems for use in applications such as thermal graphics. Such applications require a highly reliable, low noise laser or optical amplifier at a low cost.

[0003] Typically, applications for directed energy beams require a laser or optical amplifier. An optical amplifier differs from a laser by the absence of a laser cavity. Both devices typically require an active optical material, for example rare-earth doped YAG, ruby (Al_2O_3:Cr), or other material, which can be optically "pumped," such that energy can be stored in the excited states of the active atoms or molecules by an optical pump source. Amplification of input optical radiation or stimulated emission for lasing then occurs when the same optical energy stored in

the excited states is coupled to the incident optical beam.

[0004] **Figure 1A** shows an example of a side-pumped laser 100. Laser material 101 is positioned in a laser cavity defined by mirrors 102 and 103 and is pumped by diode array 104. Diode array 104 includes a series of laser diodes 105-1 through 105-N positioned to illuminate all or most of laser material 101. There are a variety of choices for laser diodes and laser diode arrays available to pump Nd or Yb doped YAG, for example. In most applications, Nd:YAG is pumped at about 808 nm and Yb:YAG is pumped at about 940 nm. Choices for diode array 104 include 10-40W arrays, 40-50W single bars, and 240-600W stacked bars, for example. Arrays can also be formed from readily available 1-2W single laser diodes.

[0005] **Figure 1B** illustrates the optical density in a cross section of laser material 101 in side-pumped laser 100 of **Figure 1A**. As is shown in **Figure 1B**, the optical density is greatest in the center of laser material 101 where the laser beam is located. However, much of the pump energy is dissipated in areas of laser material 101 that are not actively involved in the lasing process. Therefore, side pumping techniques are inherently inefficient.

[0006] As is illustrated in **Figure 1A**, the laser beam is directed between mirrors 102 and 103, where a percentage of the beam is transmitted through mirror 103. **Figure 2** illustrates the shape of a laser beam in a laser cavity such as in laser 100. The closer the laser beam is to its diffraction limit in laser material 101, the greater the depth of field and the smaller the diameter of beam handling optics (for example mirrors 102 and 103) required to transmit the beam. The ratio of the divergence of the laser beam to that of a theoretically diffraction limited beam of the same waist size in the TEM_{00} mode is usually given as $M^2=(\Theta/\theta)$, where Θ is the divergence angle of the laser beam and θ is the divergence angle of the theoretical laser beam. The angular size of the laser beam in the far field will be M^2 times the size calculated for a perfect Gaussian beam, i.e. $\Theta=M^2(2\lambda/W_0)$ for a beam waist diameter of $2W_0$.

[0007] **Figure 1C** illustrates an end-pumping arrangement for pumping laser material 101. In the arrangement shown in **Figure 1C**, laser material 101 is again placed in a laser cavity formed by mirrors 102 and 103. The laser optical energy transmitted through mirror 103 is reflected by a dichroic beam splitter 114 to form the beam. Optical energy from pump source 116 is incident on lens 115 and passes through dichroic beam splitter 114 and mirror 103 to focus in a nearly diffraction limited region of laser material 101. The beam from pump source 116 is reduced to a size and shape that resembles the shape of the laser beam shown in **Figure 2**

in active material 101. Additionally, a second pump source 110 can be focused by lens 113 through mirror 102 and into laser material 101. In some embodiments, additional optical energy can be coupled into laser material 101 from pump source 111 using a polarizing beam splitting cube 112, which transmits light from pump source 110 while reflecting light from pump source 111.

[0008] A cross section of laser material 101 illustrating optical power concentration is shown in **Figure 1D**. As can be seen in **Figure 1D**, nearly all of the pump power, as well as the laser beam, is focused in the active region of laser material 101, where the laser beam produced by laser 117 is produced.

[0009] As is pointed out in U.S. Patent 4,710,940 to D. L. Sipes, Jr, issued on December 1, 1987, to a first approximation, and not being limited by theory, the higher the pump power density the more efficient is the use of pump power. This concept is illustrated in the graphs shown in **Figures 1E and 1F**. **Figure 1E** shows the photon conversion efficiency (i.e., the number of pump photons versus the number of output laser light photons) with increasing mirror reflectivity at various input optical power densities. Higher mirror reflectivity increases the optical power density within the laser cavity. At higher pump power densities, higher efficiencies result. **Figure 1F** shows photon conversion efficiencies as a function of pump power for various spot sizes, which shows the same trend of higher efficiency with optical density as does the graph shown in **Figure 1E**. Spot size refers to the diameter of the optical pump in the optically active laser material.

[0010] Table I shows typical power usage and lifetime characteristics for a side pumped laser 100 as shown in **Figure 1A**, an end-pumped laser 117 as is shown in **Figure 1C**, and a lamp pumped laser. As expected, the diode end-pumped laser 117 has the greater efficiency. However, end-pumped laser systems have more optical components and therefore are difficult to align.

[0011] Typically, the optical beam from a laser diode outputs is highly assymmetric. Therefore, light from the diodes is difficult to couple into the active material, e.g. laser material 101, of an optical amplifier or a laser. However, as shown in Table I, the lifetimes, efficiency, and expense of various laser diode configurations make them very attractive as pump sources for optically active devices.

Table I

	Lamp Pumped	Diode End-Pumped	Diode Side-Pumped
Power to Pump Source	5000W	2.5W	50W
Power to Cooling System	500W	2.5 W	50W
Power from Pump Source	3500W	1.25W	20W
Single-Mode Power from Laser	10W	0.8W	10W
Wall-Plug Efficiency	0.2%	16%	10%
Cooling	Water	Free Air	Forced Air
Power Consumed/Output kW-hr	500 kW-hr	6.5 kW-hr	10 kW-hr
Cost of Light Source	$200	$400	$1000
Lifetime of Light Source	200 hrs	20,000 hrs	10,000 hrs

[0012] Multimode laser diodes are highly desirable optical pump sources as they are inexpensive to manufacture and are capable of producing much higher power levels than single mode lasers. Multimode lasers are more reliable than single-mode lasers as they have lower output power densities reducing the risk of catastrophic facet damage, the primary cause of laser diode failure. However the light emitted by a multimode laser diode is very asymmetric. Typically, the laser diode emitting aperture has dimensions on the order of 1μm x 100μm. It is very difficult and costly to collect and couple light emitted by a multimode laser diode into the end facet of a single-mode optical waveguide or fiber.

[0013] Most conventional waveguide amplifiers and lasers include one or more waveguide cores doped with active elements, such as Er, Yb, Nd and Tm, and are designed such that the waveguide can support coaxially propagating single-mode output and pump light. The output power of a single-mode, single laser pumped amplifier or laser is often limited to about 20dBm (100mW) by the power levels of available single-mode pump lasers. Single-mode pump lasers require more precision manufacturing tolerances and are consequently more expensive to produce than multimode lasers. As a result complex and costly schemes are required to pump arrays of waveguide optical amplifiers and lasers. Pump light has to be distributed to each amplifier channel or laser element, requiring combinations of splitters, combiners, taps, monitors

and associated control electronics to effectively manage the distribution. Polarization sensitivity of waveguide elements further complicates the distribution process.

[0014] Therefore, there is a need for optical laser devices capable of efficiently coupling light from a laser diode into the active region of a laser cavity that is cost effective and reliable, and that produces high optical output power.

Summary

[0015] In accordance with the present invention, an optical waveguide device that couples light from at least one laser diode into a high refractive index contrast slab waveguide is presented. In some embodiments, the high refractive index contrast slab waveguide includes a light duct in a horizontal plane in order to receive light from the at least one laser diode. In some embodiments, the high refractive index contrast slab waveguide includes a high refractive index active waveguide and an intermediate refractive index passive cladding.

[0016] In some embodiments, the high refractive index contrast slab waveguide is folded in a horizontal axis. In some embodiments, the intermediate passive cladding is thick enough in the vertical axis to capture a substantial amount of light from the at least one laser diode in the vertical direction. In some embodiments, light transmitted from the optical waveguide device is efficiently coupled into single mode optical fibers by mode size converters.

[0017] These and other aspects of the present invention are further described in the following figures.

Short Description of the Figures

[0018] **Figures 1A and 1B** illustrate a side-pumped solid-state laser.

[0019] **Figures 1C and 1D** illustrate an end-pumped solid-state laser.

[0020] **Figures 1E and 1F** show graphs illustrating higher pump efficiency with higher optical densities.

[0021] **Figure 2** illustrates the characteristics of a typical laser beam in a laser cavity.

[0022] **Figures 3A and 3B** illustrate integration of photodetectors and laser diodes with planar waveguides.

[0023] **Figure 4** illustrates a butt-coupling technique for optically coupling between a laser diode and a waveguide.

[0024] **Figures 5A, 5B and 5C** illustrate integrated coupling chips for coupling optical energy from a single mode laser diode chip.

[0025] **Figures 6A and 6B** illustrate a coupling chip for coupling optical energy from a multi-mode laser diode array to a multi-mode optical fiber in accordance with the present invention.

[0026] **Figures 7A and 7B** illustrate a coupling chip for coupling optical energy from a multi-mode laser diode array to a single mode optical fiber in accordance with the present invention.

[0027] **Figures 8A and 8B** illustrate an embodiment of an amplifier chip according to the present invention.

[0028] **Figure 9** illustrates the optical materials utilized in waveguides according to the present invention.

[0029] **Figures 10A, 10B, and 10C** illustrate an efficient mode size conversion for vertical

pumping of an amplifier core.

[0030] **Figure 11** illustrates a monolithic array beam concentrator chip according to the present invention.

[0031] **Figures 12A and 12B** illustrate the mode images for two example waveguides according to the present invention.

[0032] **Figure 13** illustrates a Vertical Cavity Surface Emitting Laser (VCSEL) pumped microchip laser according to the present invention.

Detailed Description

[0033] Lasers and other light sources have great utility when able to produce high optical power densities The speed and effectiveness of the interaction of laser power or energy with materials is in direct proportion to the brightness and intensity of the power or energy that the laser can deliver to the material. The highest brightness or intensity of a laser output beam is obtained when the beam is confined to the fundamental, lowest order transverse electromagnetic mode (TEM_{00}). Therefore, single transverse mode is the highest brightness form of a laser's output, which is the laser's most desirable property.

[0034] In accordance with some embodiments of the present invention, a high refractive refractive index contrast multimode slab waveguide of an appropriate design to collect and contain a high proportion of the light emitted by a single or multi-element multi-mode pump laser diode and efficiently couple that light into an assembly of actively doped single-mode waveguides embedded within the slab is presented. The light from the pump source, then, is efficiently coupled into one or more active regions through the effects of the differences in refractive index between the slab material of the waveguide and the cladding material around the slab. Both the slab material and the cladding material can be deposited with a high degree of uniformity and control in order to obtain the coupling. Further, the embedded active core material of the waveguide can also be manufactured with a high degree of uniformity and control.

[0035] In some embodiments of the invention, long, single-mode waveguides are folded many times to accommodate lengths greater than the dimensions of the pumped, encapsulating

multimode slab waveguide. The single-mode waveguide cores can be folded in such a manner as to optimize the effective absorption cross-section they present to the guided multimode pump light flux while minimizing losses due to bending experienced by propagating single-mode signal light. The efficiency of absorption of pump light from the multimode laser diodes by single-mode actively doped waveguide cores is a function of the ratio of the effective cross-section areas of the single-mode and multimode waveguides.

[0036] In some embodiments of the invention, the multimode slab waveguide itself is pumped. This effect can result in a slap light source.

[0037] In some embodiments, the dimension of the multimode slab waveguide enables conservation of high power densities of the light emitted by the pump laser diode elements, while not increasing the difficultly and reducing the effectiveness of direct coupling between the laser diodes and the edge facet of the slab waveguide. High pump power densities are particularly important for three-level active systems where natural ground state absorption must first be bleached out before gain can be achieved.

[0038] In some embodiments single-mode light emitted by the laser diode in its fast axis direction (i.e., the direction of larger laser beam divergence) is converted to multiple-mode light immediately after the light enters a slab waveguide, thereby limiting the return path for pump energy to the pump laser source. Such an arrangement increases the pumping efficiency because more light is available for pumping.

[0039] Lasing and optical amplification processes are processes of energy conversion. Energy is pumped into exciting active elements in the active material, where the energy is stored, from any energy source, commonly optical, which is capable of exciting the active elements. Energy stored in the excited active elements, then, is released when the excited active element is induced by a signal, such as when the active element is perturbed by presence of another photon, into releasing the energy in the form of an optical photon. For example, energy from the excited states of a laser material is released in a highly coherent form by stimulated emission. The efficiency of the conversion process is a key factor in determining the cost-effectiveness of a particular laser or optical amplification or conversion process.

[0040] Planar waveguide forms of optical amplifiers and lasers are desirable as they are very compact compared to other forms of optical amplifiers and lasers. In addition, a planar

waveguide form potentially allows the integration of diverse optical and electronic functions on, for example, silicon wafers which can be manufactured in high volumes and at low cost with processes commonly used in the semiconductor-industry. In addition to waveguides, slab emitters are desirable as efficient light sources.

[0041] **Figure 3A**, for example, illustrates integration of an optical waveguide 301 with a photodetector (PD) 302. Photodetector 302 is formed on semiconducting layer 305. An optical layer 303 is formed over photodiode 302 and waveguide 301 is formed on optical layer 303. Light traveling through waveguide 301 can be coupled onto photodetector 302 at coupler 306.

[0042] **Figure 3B** illustrates integration of pump laser diodes 310 with an active material waveguide 311. As shown in **Figure 3B**, laser waveguide 311 is formed on an optical layer 313. Optical layer 313 is formed over laser diodes 310, which are formed on semiconducting layer 312. In some embodiments, laser diodes 310 can be formed to the side of optical waveguide 311, over optical waveguide 311, or in any other orientation with respect to optical waveguide 311 that allows pumping of the active dopant ions of optical waveguide 311.

[0043] **Figure 4** illustrates coupling of a laser diode chip 410 with a high refractive index contrast (Δn) waveguide 411. The method of coupling illustrated in **Figure 4** is referred to as "butt coupling," where laser diode 410 is a single-mode semiconductor laser diode output facet positioned to within about 5 μm of high Δn rectangular waveguide 411 in order to correct for mode astigmatism, thereby reducing coupling loss. In some embodiments, about a 50% coupling can be achieved with this method utilizing uncoated facets. Unfortunately, customer demand is for greater than 80-85% coupling efficiency for laser diodes with complex, non-gaussian mode output profiles. Therefore, conventional butt-coupling techniques are not meeting customer demand.

[0044] **Figure 5A** illustrates a laser coupling chip 501 that couples light from a laser diode 506 to an optical fiber 507. Coupling chip 501 includes a waveguide 502 with an integrated photodiode 503 to allow for down-stream power monitoring. In some embodiments, photodiode 503 may couple about 0.02 dB to about 0.05 dB of the optical power in waveguide 502 to provide optical coupling. A dual-core mode size converter 504 can be formed in coupling chip 501 to optimize for efficient optical coupling to optical fiber 507. Dual-core mode size converter 504 can couple light to optical fiber with a coupling loss of about 0.25 dB. The resulting total loss of less than 1 dB in laser coupling chip 501 results in a greater than 80% coupling efficiency

between laser diode 506 and optical fiber 507. However, there remains the problem that the coupling efficiency between laser diode 506 and coupling chip 501 is less than 80%.

[0045] In some embodiments, coupling chip 501 can be formed on a millimeter-scale chip sized to fit a standard 14-pin butterfly package. Further, in order to achieve optimum coupling efficiencies, the slow-axis and fast-axis alignment between laser diode 506 and coupling chip 501 requires sub-micron positioning precision.

[0046] **Figure 5B** shows a single mode laser diode array coupler chip 508. Light from laser diode array 520 is coupled into waveguides 521, 522, 523, and 524. Waveguides 521, 522, 523 and 524 are each integrated with a photodetector 525, 526, 527, and 528, respectively, as is discussed above with regard to **Figure 5A**. Further, mode size converters 529, 530, 531, and 532 formed in waveguides 521, 522, 523, and 524, respectively, efficiently couple light into optical fibers 533, 534, 535, and 536, respectively. Light from diode array 520, then, is coupled through optical fibers 521, 522, 523, and 524 into optical fibers 533, 534, 535, and 536. **Figure 5C** shows a single mode laser diode array coupler chip 509 similar to diode array coupler chip 508 with a pitch size converter 540, which provides for closer packing of optical fibers 533, 534, 535, and 536.

[0047] Other pumping schemes are described, for example, in U.S. Patent 6,236,793, issued to Lawrence et al. on May 22, 2001; U.S. Patent 4,710,940, issued to Sipes; U.S. Patent 4,785,459 issued to Baer on November 15, 1988; and at Lawrence Livermore National Labs. In a system proposed by Lawrence, et al., the pump light is reflected into the active waveguide core by reflecting the pump beam from a prism. Signal power is then transmitted through the prism into the waveguide core. However, in this configuration alignment of the optics directing the pump power into the waveguide core for efficient pumping needs to be arranged such that the waist of the beam is incident on the waveguide core. This results in a large alignment problem for efficiently coupling the pump power into the waveguide core. The arrangement proposed by Sipes involves an array of laser diodes arranged along the corners of a pumping path, for example a zig-zag pattern, such that pump power from multiple laser diodes are coupled into an active waveguide. The arrangement proposed by Baer includes a side pumped active material block with zig-zagging of the signal bea, through the active material for maximum interaction.

[0048] Lawrence Livermore National Labs has proposed a high output Yb:YAG laser system that utilizes a diode bar stack and a lens duct that brings the pump light from the diode bar stack

into a Yb:YAG laser rod. About an 80% coupling efficiency can be achieved in this fashion. However, this solution requires a bulk laser rod and a large lens duct to direct light from the diode bar stack into the laser rod.

[0049] Some embodiments of the present invention can utilize multimode laser diodes in the form of single elements or arrays, to efficiently pump compact, single-mode, planar waveguide optical amplifiers, lasers, and slab devices, which can be integrated with other optical and electronic functions and manufactured inexpensively in high volumes with semiconductor industry techniques. As shown in **Figures 6A and 6B,** the output light from a multimode laser diode 610 is single-mode in the vertical plane (the fast axis) and multimode in the horizontal plane (the slow axis). Therefore, the output beam diverges very rapidly in the vertical axis (the fast axis) but slowly diverges in the horizontal plane (the slow axis).

[0050] **Figures 6A and 6B** illustrate coupling of light from a laser diode array into a planar waveguide in accordance with the present invention. As shown in **Figures 6A and 6B,** the light beam from multimode laser diode array 610 diverges less in the slow axis direction (shown in **Figure 6A**) than it does in the fast axis direction (shown in **Figure 6B**). The output beams from laser diode array 610 diverge more in the vertical axis (shown in **Figure 6B**) than in the horizontal axis (shown in **Figure 6A**). Embodiments of the present invention take advantage of the slow divergence in the horizontal axis to increase the optical density in high refractive index waveguide 612. Coupling chip 611 can include a large lens duct 613 to direct light into high refractive index waveguide 612. The material of waveguide 612 and lens duct 613 can be the same material and can be deposited and patterned on a substrate in the same series of processing steps. Light from waveguide 612 can then be coupled into multimode fiber 614.

[0051] A higher optical power density, then, can be achieved utilizing less expensive multimode laser diode bars, rather than single mode laser diode arrays, and coupling the optical output from multiple ones of the laser diodes in diode array 610 into waveguide 612. Higher coupling efficiency is achieved by utilizing a light duct 613 formed with waveguide 612. Further, the horizontal alignment between diode array 610 and coupling chip 611 is not critical, so long as the light beams are directed toward duct 613. As shown in **Figure 6B,** alignment in the vertical axis (i.e., the fast axis) is somewhat critical because of the large divergence of the light output from diode array 610 in that direction.

[0052] The pump light from the laser diode can be constrained within the confines of the

high Δn slab waveguide and therefore no critical alignment exists between the laser diode and the active waveguide, as would be true for conventional pumping configurations as has been discussed above. Further, there is no need to maintain single-mode propagation in the horizontal direction, as alignment tolerance are relaxed in the horizontal plane. In the vertical plane, a single optical mode can be excited to obtain maximum power density by using more precise alignment. When maximize power density is not required, the alignment tolerances in the vertical plane can also be relieved by using a thicker high refractive index contrast slab waveguide and allowing the light to propagate multimode in the vertical direction as well.

[0053] **Figures 7A and 7B** illustrate coupling utilizing a double-clad core. As shown in **Figure 7A,** light from one or more laser diodes 710 of multimode pump diode array 702 is coupled into waveguide 703 of coupling chip 701. Again, a lens duct 704 can be formed with waveguide 703 to direct light from laser diodes 710 in diode array 702 into waveguide 703. In coupling chip 701, light from waveguide 703 can be coupled into single-mode fiber 705.

[0054] **Figure 7B** shows a cross-section of waveguide 703. Waveguide 703 includes a single-mode core 706. Single-mode core 706 can be formed, for example, from rare-earth doped Al_2O_3, Y_2O_3, or TiO_2 to form a high refractive index core. Single-mode core 706 can be surrounded by a multi-mode cladding 707 having a lower refractive index than that of single-mode core 706, which can be formed from an intermediate refractive index contrast material such as Al_2O_3 or Y_2O_3. In some embodiments, the dimensions of multi-mode cladding 707 can capture most or all of the light output from laser diode array 702. Waveguide 703 can be formed on, for example, a silica or aluminasilicate buffer layer 709 deposited on a substrate. A second buffer layer 708 can be formed over waveguide 703.

[0055] In this way, coupling chip 701 can provide efficient conversion of low optical power density light emitted from directly-coupled multimode laser diode bars to high optical power density. Where high-refractive index contrast core 706 is optically active, a laser can be formed by including a laser cavity, which can be formed by depositing mirrors on the ends of chip 701.

[0056] Very high optical-to-optical efficiencies (e.g., greater than 80%) can be achieved in coupling chip 701. For example, a multimode laser diode operating at a wavelength of 920 nm, is efficiently coupled into a single-mode output laser at about 1100 nm utilizing an active waveguide 706 formed from double-clad Yb-doped silica, for example.

[0057] Having efficiently coupled the multimode pump light into a high refractive index slab waveguide which is multimode in the horizontal plane and may or may not be single mode in the vertical plane, a single mode active waveguide located in the high refractive index portion of the slab will be efficiently pumped. Such active areas are shown, for example, in **Figures 8A and 8B**. In some embodiments, the active region of the waveguide can be "folded" or routed through many loops in order to increase the length of active material pumped and thereby increase the amplification in the waveguide.

[0058] An embodiment of a folded active region embedded within the large high refractive index slab is shown in **Figures 8A and 8B**. One skilled in the art will recognize that any appropriate configuration or routing of active area waveguide within the slab can be utilized. For example, zig-zag configurations may also be utilized in addition to the spiral configuration shown in **Figure 8A**. Additionally, linear arrays of active regions may be utilized.

[0059] **Figure 8A** shows the slow axis view (i.e., the horizontal view) and **Figure 8B** shows the fast-axis view (i.e., the vertical cross section) of an active waveguide amplifier or laser chip 801 pumped by a multimode laser diode array in accordance with the present invention. As shown in **Figure 8A**, a single mode high refractive index contrast core 803 is arranged on chip 801. Although a spiral arrangement is shown in **Figure 8A**, any arrangement that provides a long signal path between a single mode input fiber 807 and a single mode output fiber 808 can be implemented. Light output from laser diode array 802 is captured by an intermediate refractive index contrast cladding layer 804 in which the single-mode high refractive index contrast active waveguide 803 is embedded. **Figure 8B** shows a cross section of an area of chip 801 with multiple crossings of single-mode high refractive index contrast active waveguide 803. As an example, active waveguide 803 can be formed from Yb-doped Al_2O_3, Y_2O_3 or TiO_2. Intermediate refractive index contrast cladding 804 can be formed from Al_2O_3 or Y_2O_3. In this arrangement, a high pump-power density can be achieved in multi-mode cladding 804, which results in highly efficient pumping of active waveguide 803.

[0060] Multi-port amplifiers can be obtained by routing multiple folded regions of active waveguide such as waveguide 803 within the high Δn slab 804 of chip 801. For example, multiple active cores may be routed together as shown in **Figure 8A**. A single multimode pump, therefore, can be shared among several single-mode active amplifying waveguides without the need to split the pump light and separately distribute the light to activate the single-mode

amplifying waveguides separately. There is, therefore, no need for pump splitters or multiplexers. Further, the higher area of the active region increases absorption of the pump light, reducing the need for mirrors to rout the pump light through the active regions multiple times.

[0061] **Figure 9** illustrates material depositions that provide high grade, optically transparent, highly uniform slab waveguides with highly controllable Δn values. The production of such waveguides is further discussed in U.S. Application Serial No. 09/903081, "As-Deposited Optical Waveguides with Low Scattering Loss and Methods for Their Manufacture," by Demaray et al, filed on July 10, 2001; U.S. Application Serial No. 10/101863, "Biased Pulse DC Sputtering of Oxide Films, by Zhang et al., filed on March 16, 2002; U.S. Application Serial No. 10/101,341, "Rare-Earth Pre-Alloyed PVD Targets for Dielectric Planar Applications," by Milonopoulou et al., filed on March 16, 2002; and Application Serial No. 09/633307, "Planar Optical Devices and Methods for their Manufacture," by Demaray et al., filed on August 7, 2000, each of which is incorporated by reference herein in its entirety.

[0062] Waveguide materials used to form active core waveguides, passive waveguides, and claddings consistent with embodiments of the present invention can be deposited by biased pulsed DC plasma vapor deposition (PVD), as described in U.S. Application Serial No. 10/101,341 (the '341 application). The physical characteristics of the optical material deposited by biased pulsed DC PVD depends on various process parameters, as discussed in the '341 application. A device, including photodetectors and other electronics, such as those shown in Figures 3A through 8B and discussed above, can be fabricated by depositing one or more active or passive optical layers and patterning the optical layers to form the waveguides and lens ducts as shown. In some applications, several deposition and patterning steps may be applied to form the desired structures.

[0063] As shown in **Figure 9**, which shows active and passive waveguide materials of highly amorphous, defect free films of aluminasilicated deposited by biased pulsed DC PVD. Further, the films have very high optical transparency, for example below 0.3 db/cm loss and, in some deposited films, less than about 0.1 db/cm loss. Therefore, deposition of films utilizing biased pulsed-DC PVD are useful for providing structures for optical coupling devices, optical amplifiers, and optical laser structures for highly efficient coupling of pump sources as has been discussed above.

[0064] In biased pulsed DC PVD, deposition is performed in a vacuum deposition chamber.

A substrate is mounted on a support which also provides an RF bias voltage to the substrate. RF power is supplied to a target formed from material to be deposited as gas is allowed into the chamber. A plasma is excited in the gas and the material is deposited on the substrate. Further, a pulsed DC signal is provided to the target. Further details regarding the deposition process are provided in the '341 application.

[0065] Coupling of light, for example from optical fiber 807 into waveguide 803, through efficient mode size conversion is illustrated in **Figures 10A, 10B, and 10C**. Vertically tapered mode-size conversion is further discussed in U.S. Application Serial No. 10/101492, "Mode Size Converter for a Planar Waveguide," by Tao et al, filed on March 16, 2002, herein incorporated by reference in its entirety. A very smooth vertical taper can efficiently couple light from optical fiber 807 into high refractive index contrast, core waveguide 803 very efficiently. **Figure 10B** shows the mode size of an optical beam at a point where light enters waveguide 803. **Figure 10B** shows a significantly smaller mode size in the region of waveguide 803 after the adiabatic S-taper mode size converter 1001. Mode size converter 1001 can be produced in a biased pulsed-DC PVD process with a shadow mask.

[0066] Table II shows modeling of mode diameter at the output facet of a mode converter for various core/cladding refractive index contrasts Δn. The dimensions in Table II refer to the dimensions of the output facet of the rectangular mode converter.

Table II

Δn	1.0 μm x 1.0 μm	1.5 μm x 1.5 μm	2.0 μm x 2.0 μm	2.5 μm x 2.5 μm
0.43%	38 μm	35 μm	14 μm	6 μm
0.3%		36 μm	20 μm	16 μm
0.2%			32 μm	24 μm

[0067] **Figure 11** illustrates an image concentrator 1101 for adiabatically compressing the diameter of the mode output by a passively Q-switched microchip laser array. Image concentrator 1101 employs a reverse taper 1106, such as that first disclosed in U.S. Application Serial No. 10/101492 to Tao et al. Reverse taper 1106 can be formed vertically and/or horizontally and thereby provides coupling into a smaller mode size. A further embodiment includes a pitch size conversion such as that illustrated in **Figure 5C**. Embodiments of the

invention enable the mode size and pitch size conversion of individually addressable microchip laser array, so as to be tailored to standard print pixel densities for use in direct printing and micromaching applications.

[0068] Image concentrator 1101 can include an addressable array pump bar 1102 which is capable of addressing and exciting individual pixels of a microchip bar 1103. Array pump bar 1102 includes an array of laser diodes which produce light when individually addressed. Microchip bar 1103, which provides amplification as was discussed in **Figures 6-8**. Beam concentrator chip 1104 can include light ducts or vertical tapers in order to collect a substantial amount of light from microchip bar 1103. Further, a vertical reverse taper 1106, as is described in U.S. Application Serial No. 10/101,492, allows for a compressed output mode. As shown in **Figure 11**, the mode of the beam output by beam concentrator chip 1104 is much smaller than the mode of the beam in microchip bar 1103. In some embodiments, a monolithic array beam concentrator chip can convert 50 μm or 90 μm diameter single mode spots from microchip bar 1103 into 20 to 25 μm diameter spots.

[0069] **Figures 12A and 12B** show mode sizes for some weakly-confined mode propagation in waveguides. **Figure 12A** illustrates a 6.2 μm mode diameter at the output facet of a 1.5 μm x 3.5 μm waveguide for 980 nm light with a refractive index contrast Δn between the core and the cladding of about 1%. **Figure 12B** illustrates a 7.6 μm mode diameter at the output facet of a 1.25 μm x 3.5 μm waveguide for 980 nm light with a refractive index contrast of about 1%. As is shown in **Figures 12A and 12B**, the optical energy is concentrated in the center of the facet.

[0070] Table III illustrates facet damage considerations in a image concentrator such as image concentrator 1101 shown in **Figure 11**. Table III illustrates, for representative pixel densities, the mode size required, the distance between modes, and the resulting power density in image concentrator 1101. The value of 14.2 for power density shown for 2400 dpi pixel density exceeds the damage threshold of Quartz.

Table III

Pixel Density (dpi)	Mode Pitch/Mode Size	Power Density at Facet ($GWcm^{-2}$)	Collimation Distance (μm)
600	42	0.9	842
1200	21	3.6	210
2400	11	14.2	53

[0071] **Figure 13** illustrates a vertical cavity surface emitting laser (VCSEL)-pumped microchip 1401 according to the present invention. VCSELs 1401 can be deposited on a GaAs substrate 1402. VCSELs 1401 include a dichroic output facet coating. An active gain medium 1404 can be deposited directly over VCSELs 1403. Active gain medium 1404 can be, for example, Nd, Yb, Er, Tm, Ho, Pr, or Ce doped silica. A saturable absorber 1405 can be deposited over gain medium 1404. Saturable absorber 1405 can be, for example, a Cr4+ or Co2+ doped silica film. A VCSEL pumped microchip 1401 can be fabricated using high volume wafer-scale semiconductor manufacturing techniques. The doped silica used for saturable absorber 1405 and active gain medium 1404, for example, can be deposited by biased pulsed-DC PVD processing techniques.

[0072] The embodiments discussed here are examples only and are not intended to be limiting of the invention. One skilled in the art will recognize multiple variations that are intended to be within the spirit and scope of the present disclosure.

I claim:

1. An optical waveguide device, comprising,

at least one laser diode; and

at least one high refractive index contrast slab waveguide coupled to receive light from the at least one laser diode,

wherein the slab waveguide is deposited by biased pulsed DC plasma vapor deposition.

2. The optical waveguide device of claim 1, wherein the slab waveguide is formed from a highly amorphous film.

3. The optical waveguide device of claim 1, wherein the slab waveguide is highly optically transparent.

4. The optical waveguide device of claim 1, wherein the slab waveguide has a high surface smoothness.

5. The optical waveguide device of claim 1, wherein the high-refractive index contrast slab waveguide includes a lens duct.

6. The optical waveguide device of claim 1, wherein the at least one laser diode comprises a diode array.

7. The optical waveguide device of claim 1, wherein the high refractive index contrast slab waveguide includes a high refractive index active waveguide and an intermediate refractive index passive cladding.

8. The optical waveguide device of claim 7, wherein the high refractive index contrast slab waveguide is folded in the plane of the slab.

9. The optical waveguide device of claim 7, wherein the intermediate passive cladding is thick enough in the vertical axis to capture a substantial amount of light emitted from the at least one laser diode.

10. The optical waveguide device of claim 1, wherein the high refractive index contrast slab waveguide includes a mode-size converter.

11. The optical waveguide device of claim 1, wherein the at least one laser diode is a vertical cavity surface emitting laser and the high refractive index contrast waveguide is deposited over the vertical cavity surface emitting laser.

12. The optical waveguide device of claim 1, wherein the high refractive index contrast slab waveguide includes an array of waveguides.

13. The optical waveguide device of claim 11, wherein a mode size of an optical beam transmitted by the high refractive index contrast slab waveguide is less than a mode size of an incident optical beam.

14. The optical waveguide device of claim 12, wherein the high refractive index contrast slab waveguide includes at least one vertical reverse taper.

15. A method of coupling pump light into a gain medium, comprising:

depositing the gain medium by a biased pulsed-DC plasma vapor deposition process;

forming a high refractive index contrast waveguide from the gain medium; and

directing pump light into the high refractive index contrast waveguide.

16. The method of claim 15, wherein forming a high refractive index contrast waveguide includes patterning the gain medium.

17. The method of claim 16, further including depositing an intermediate refractive index contrast material over the high refractive index contrast waveguide.

18. The method of claim 16, wherein patterning the gain medium includes forming a lens duct.

19. The method of claim 16, wherein patterning the gain medium includes forming a horizontal taper.

20. The method of claim 16, wherein depositing the gain medium includes forming a vertical taper.

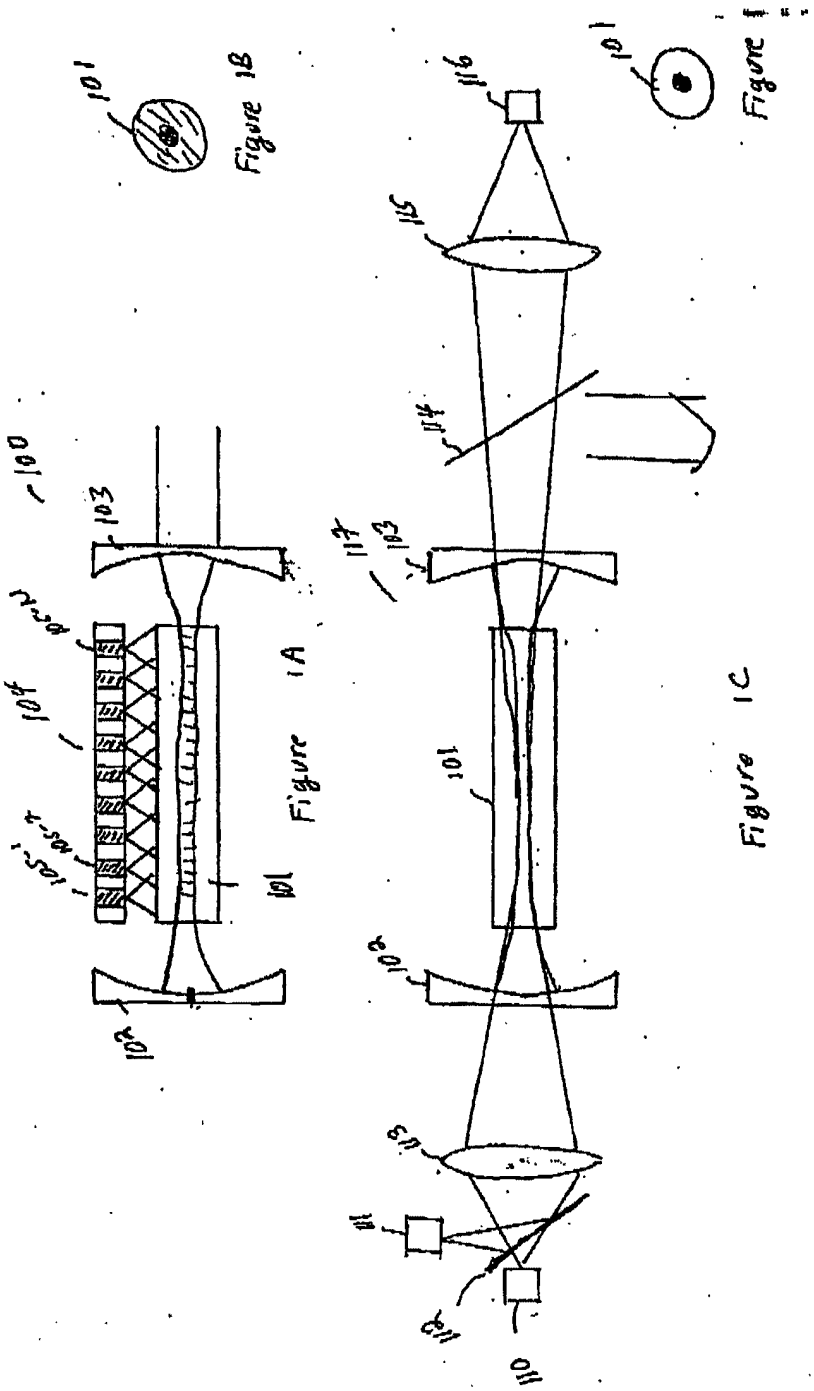
101
Figure 1B
Figure 1
115
114
116
100
103
117
103
104
101
105-1
105-2
101
Figure 1A
101
102
101
Figure 1C
113
111
118
110

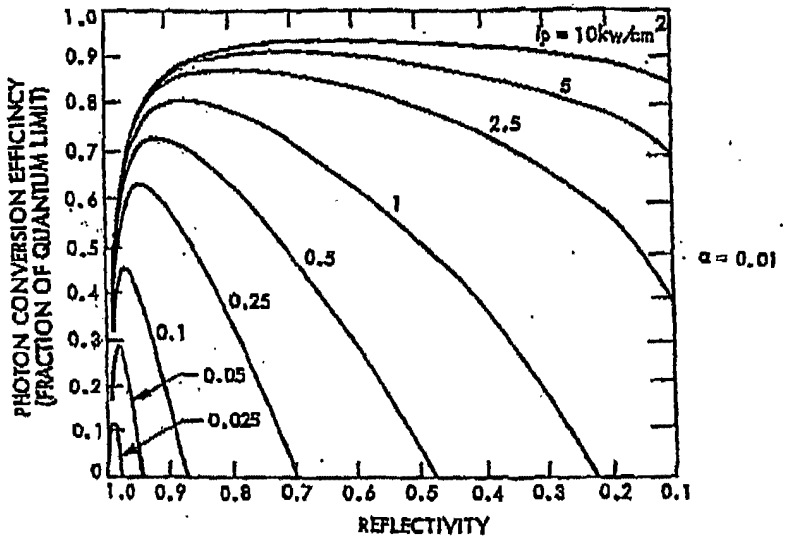

Figure 1E

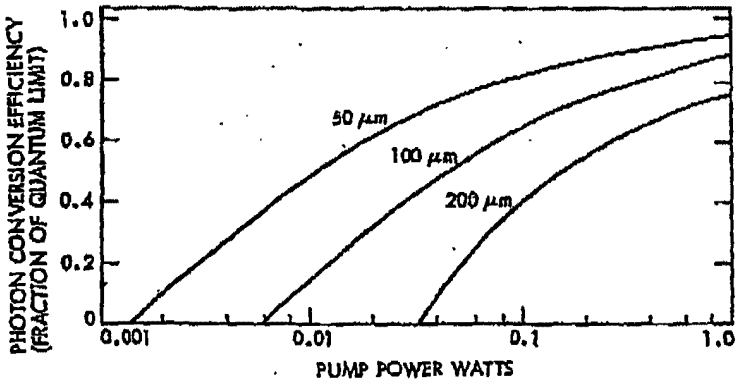

Figure 1F

Figure 2

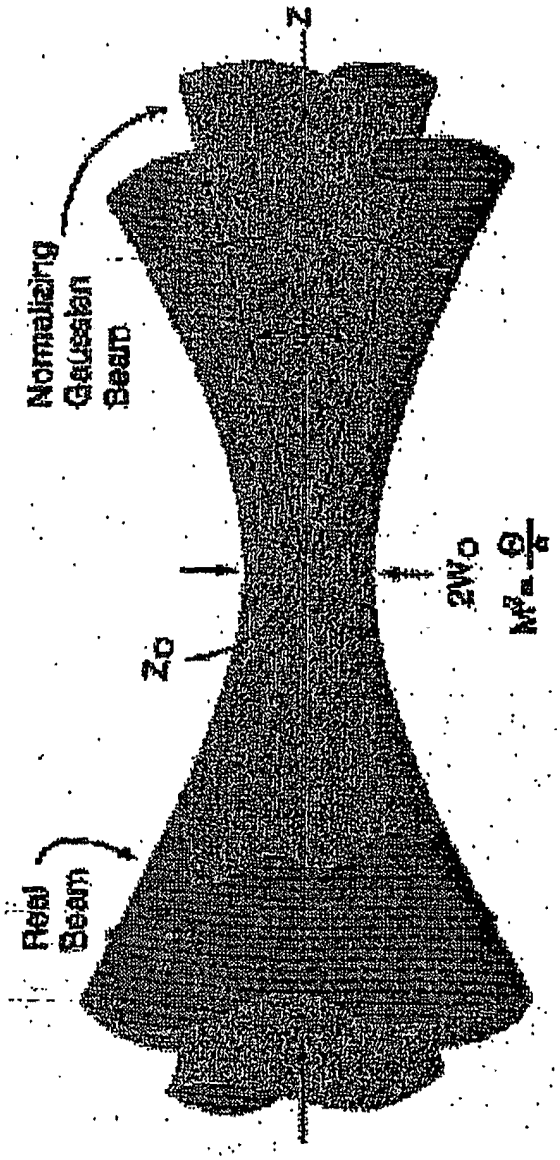
Normalizing Gaussian Beam
Real Beam
Z
Z_0
$2W_0$
$M^2 = \frac{\Theta}{\theta}$

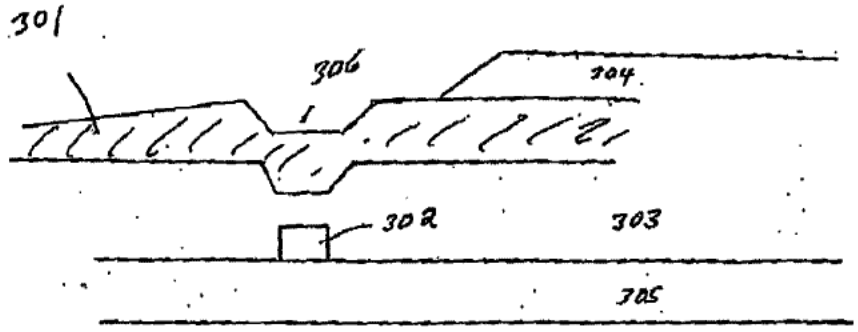

Figure 3A

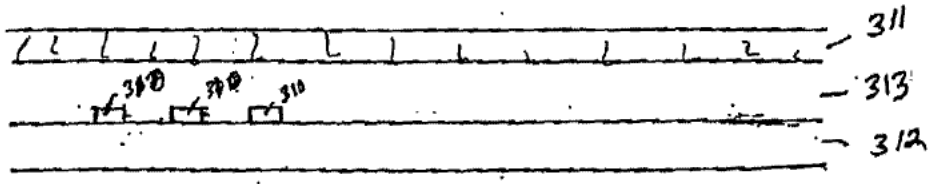

Figure 3B

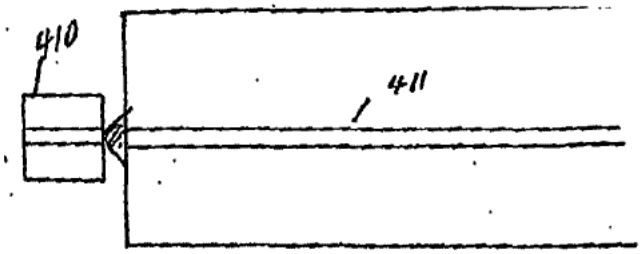

Figure 4

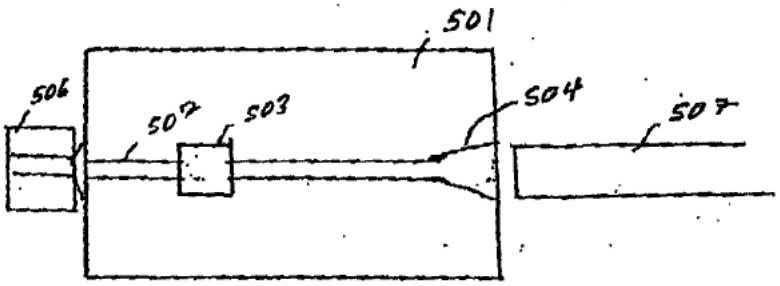

Figure 5A

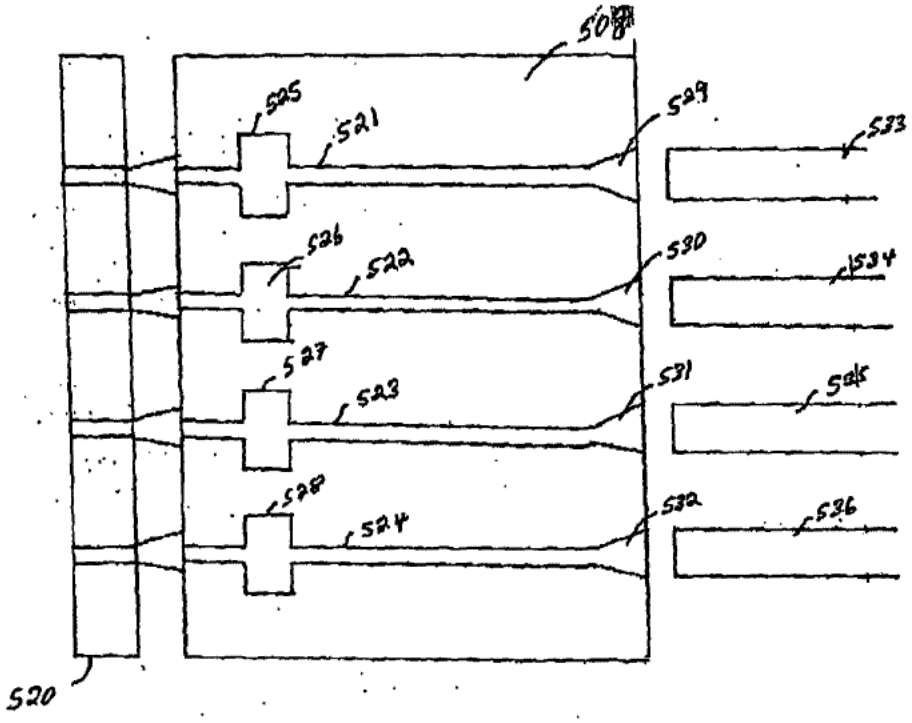

Figure 5.B

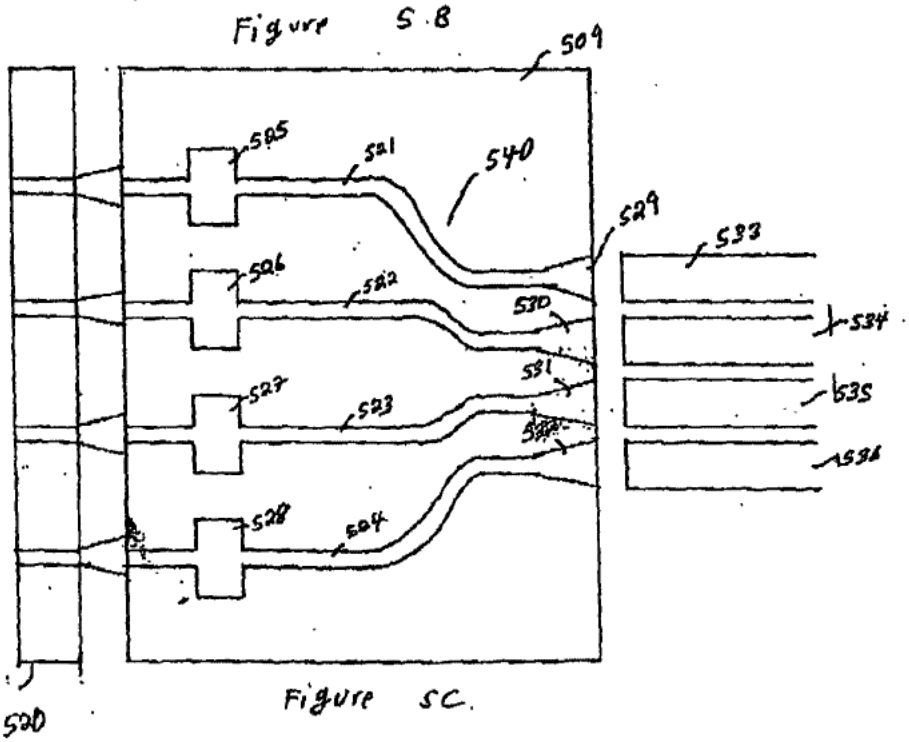

Figure 5C.

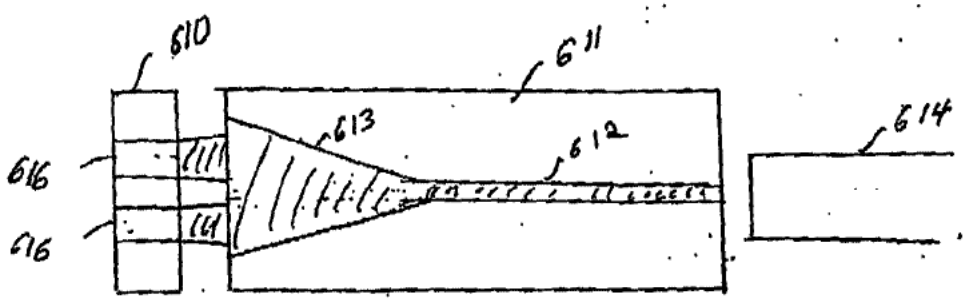

Figure 6A

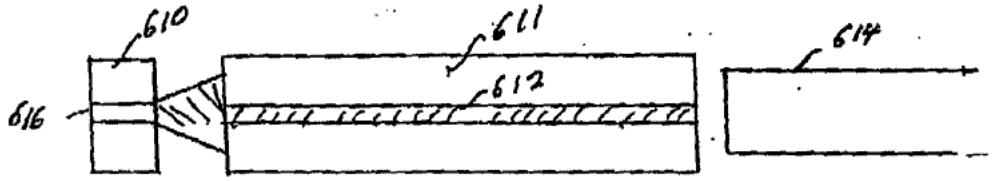

Figure 6B

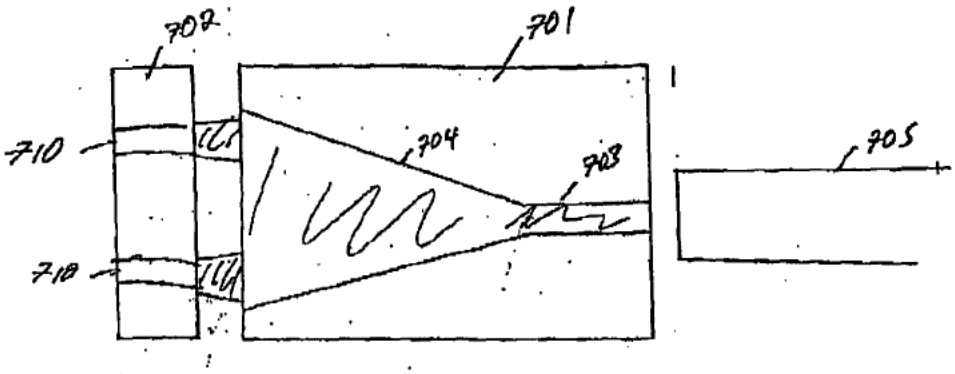

Figure 7A

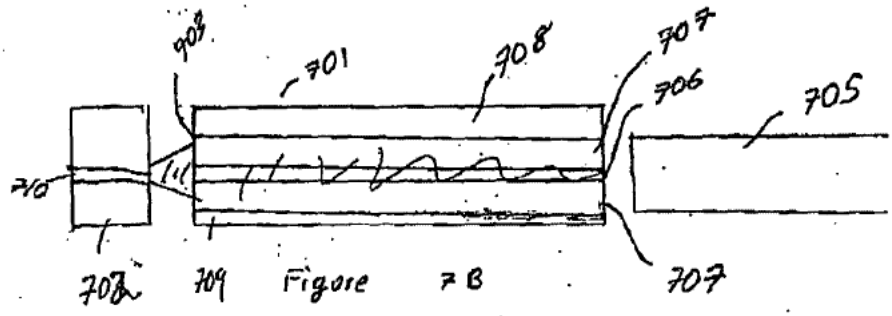

Figure 7B

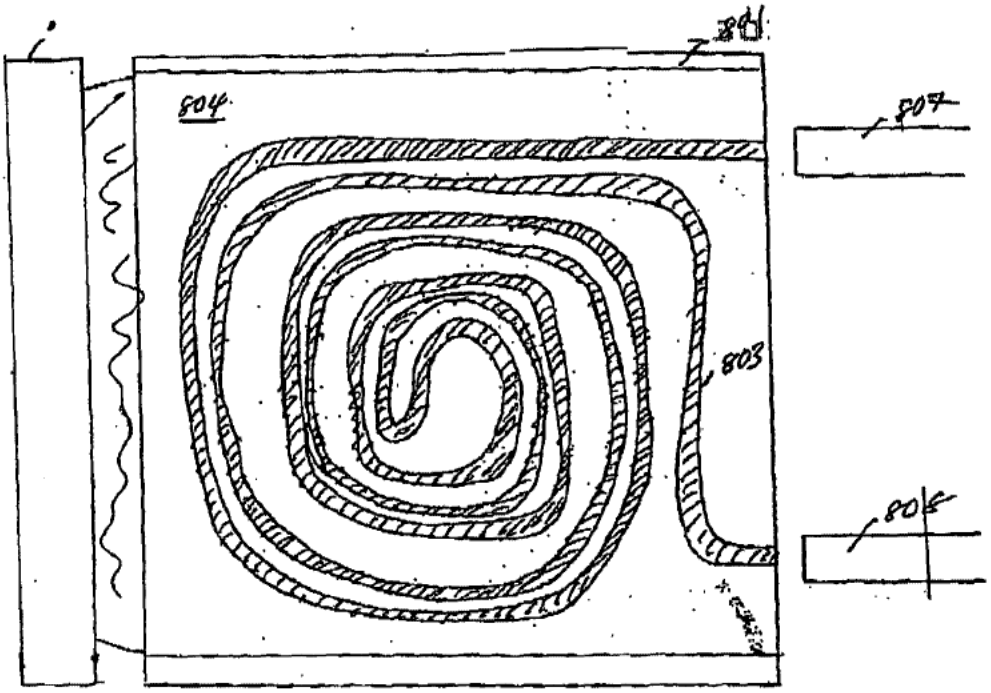

Figure 8A

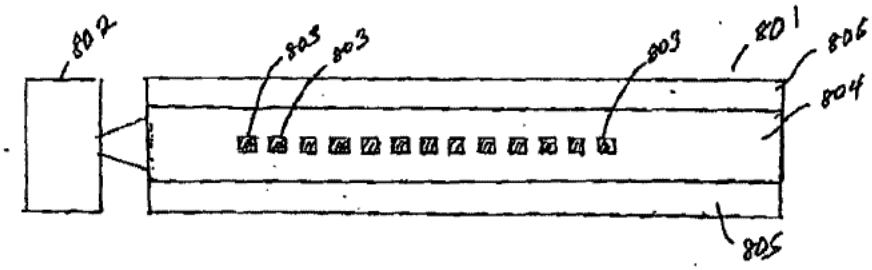

Figure 8B

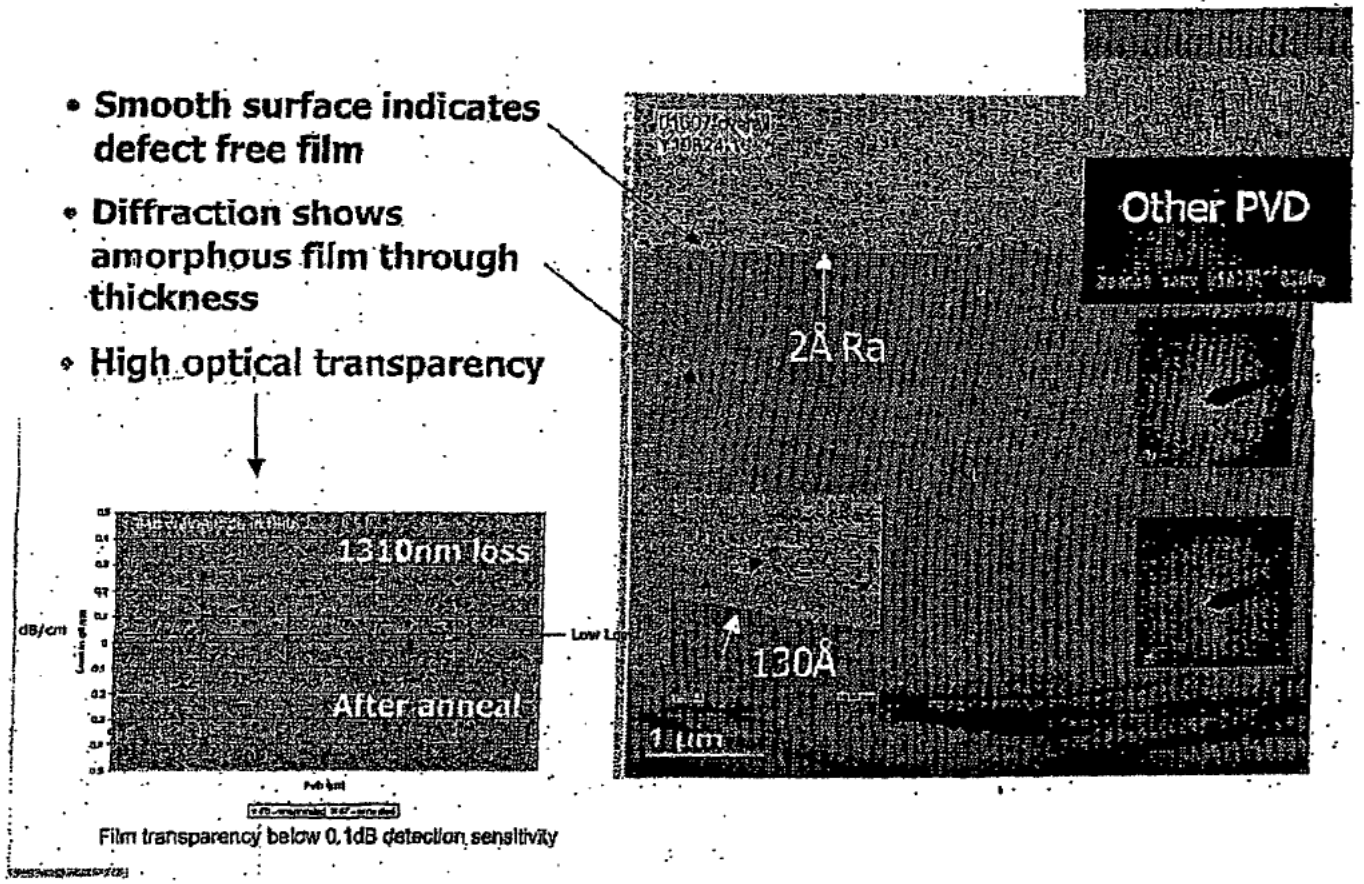
• Smooth surface indicates defect free film
• Diffraction shows amorphous film through thickness
• High optical transparency
1310nm loss
After anneal
dB/cm
Film transparency below 0.1dB detection sensitivity
Other PVD
2Å Ra
130Å
1 µm

Figure 4

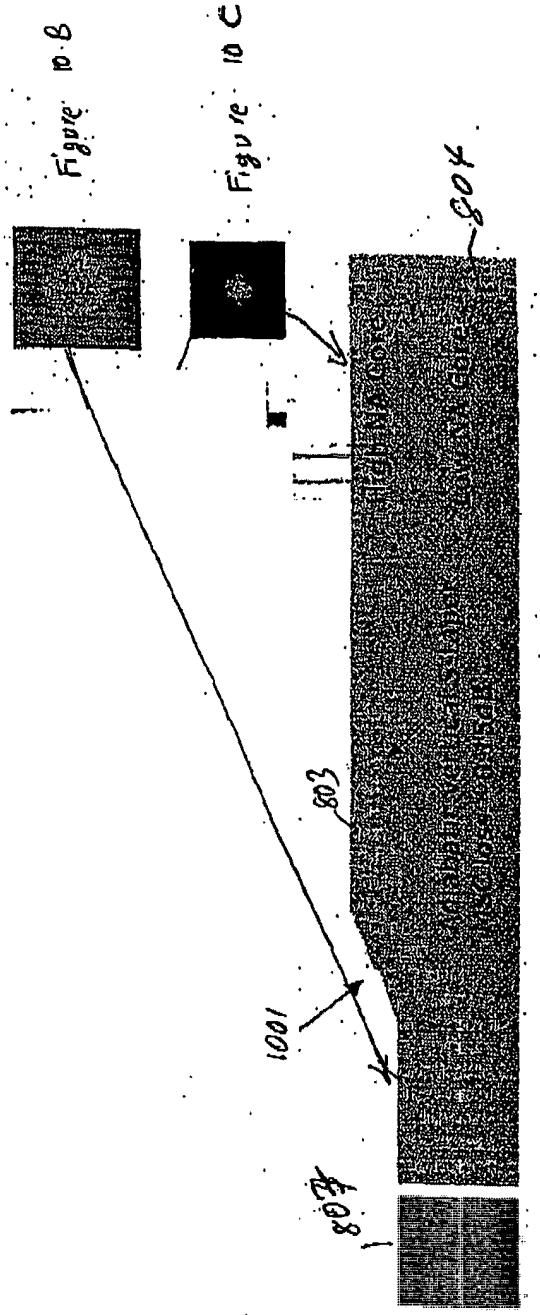

Figure 10A

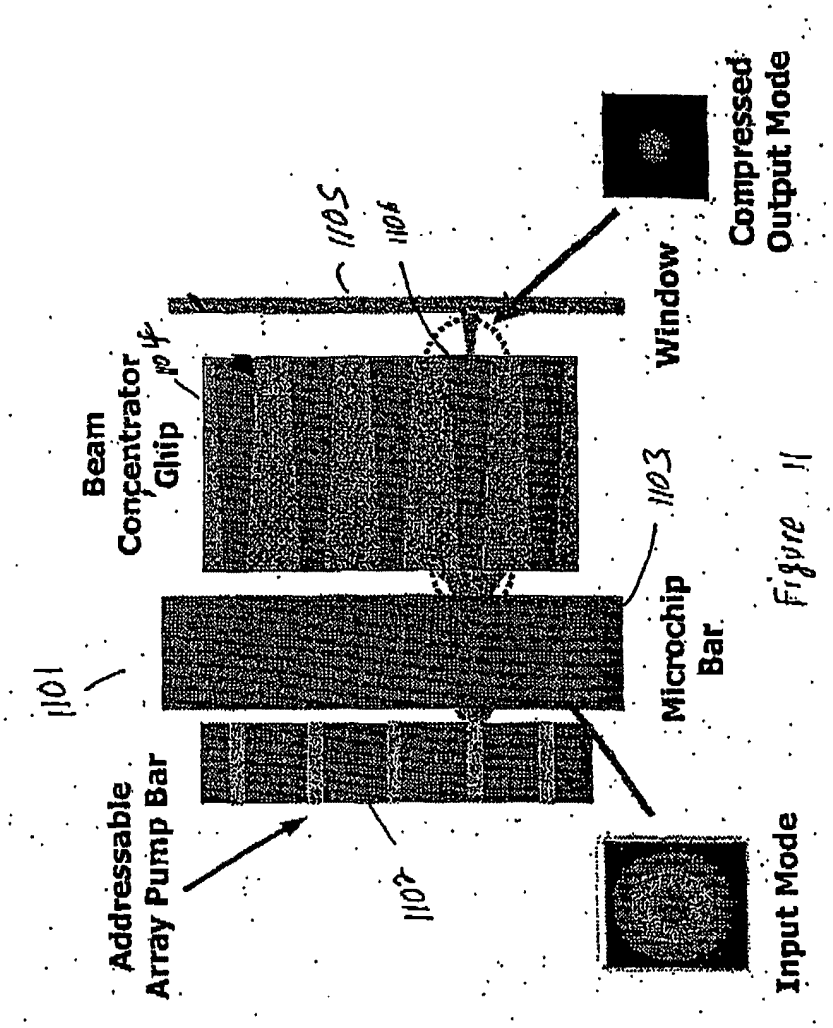
Beam Concentrator Chip
1104
1105
1101
Addressable Array Pump Bar
1102
Window
Compressed Output Mode
1103
Microchip Bar
Input Mode

Figure 11

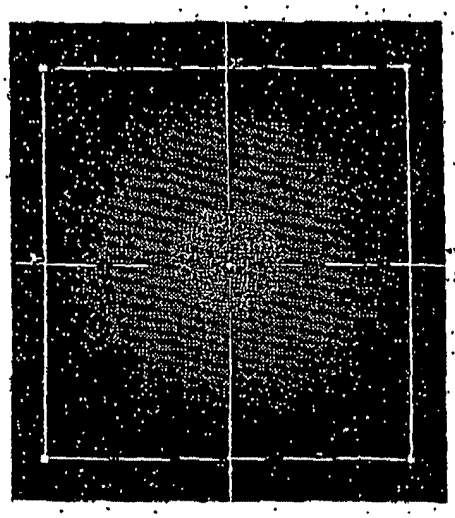

Figure 12B

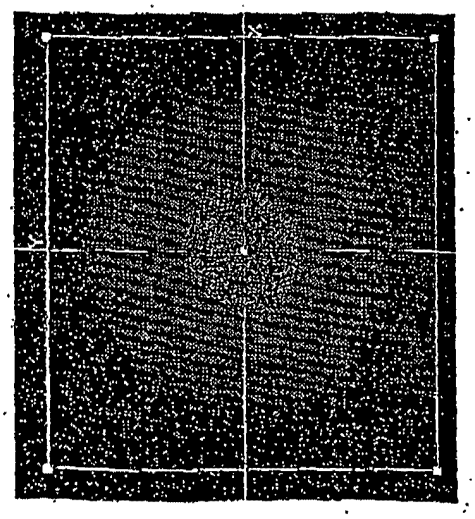

Figure 12A

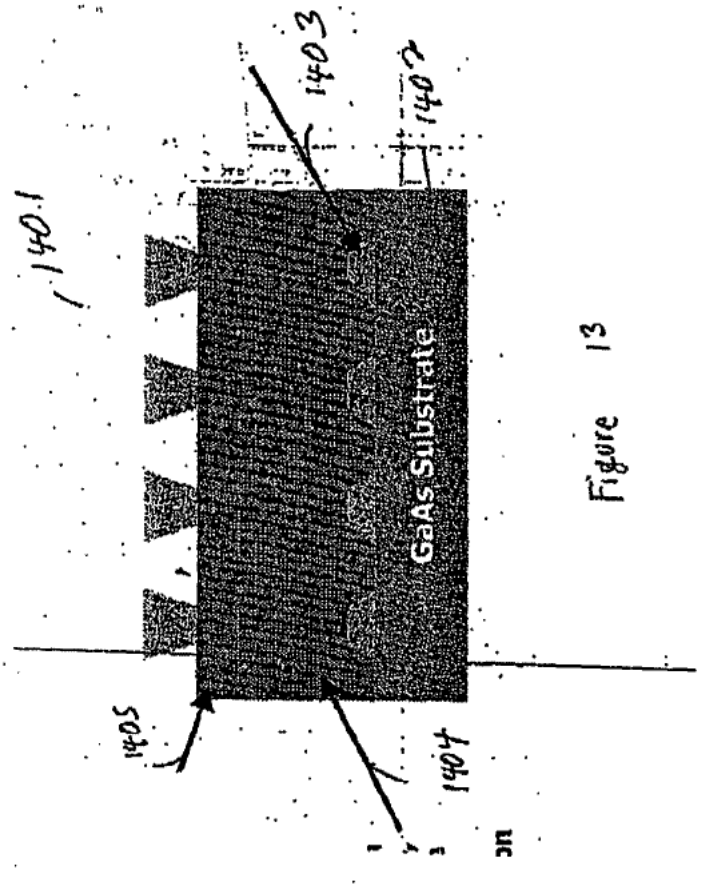

Figure 13

INTERNATIONAL SEARCH REPORT

International Application No
PCT/US 03/24809

A. CLASSIFICATION OF SUBJECT MATTER
IPC 7 H01S3/16 H01S3/063 H01S3/0933

According to International Patent Classification (IPC) or to both national classification and IPC

B. FIELDS SEARCHED

Minimum documentation searched (classification system followed by classification symbols)
IPC 7 H01S

Documentation searched other than minimum documentation to the extent that such documents are included in the fields searched

Electronic data base consulted during the international search (name of data base and, where practical, search terms used)

EPO-Internal, INSPEC, WPI Data, PAJ

C. DOCUMENTS CONSIDERED TO BE RELEVANT

Category °	Citation of document, with indication, where appropriate, of the relevant passages	Relevant to claim No.
A	WO 02 12932 A (SYMMORPHIX INC) 14 February 2002 (2002-02-14) cited in the application page 5, line 22-26; figure 5	1-20
A	JONSSON L B ET AL: "Frequency response in pulsed DC reactive sputtering processes" THIN SOLID FILMS, ELSEVIER-SEQUOIA S.A. LAUSANNE, CH, vol. 365, no. 1, April 2000 (2000-04), pages 43-48, XP004195125 ISSN: 0040-6090 paragraph '0001!	1,15
A	US 5 689 522 A (BEACH RAYMOND J) 18 November 1997 (1997-11-18) column 3, line 41-52	5,6,18

-/--

[X] Further documents are listed in the continuation of box C.

[X] Patent family members are listed in annex.

° Special categories of cited documents:

"A" document defining the general state of the art which is not considered to be of particular relevance
"E" earlier document but published on or after the international filing date
"L" document which may throw doubts on priority claim(s) or which is cited to establish the publication date of another citation or other special reason (as specified)
"O" document referring to an oral disclosure, use, exhibition or other means
"P" document published prior to the international filing date but later than the priority date claimed

"T" later document published after the international filing date or priority date and not in conflict with the application but cited to understand the principle or theory underlying the invention
"X" document of particular relevance; the claimed invention cannot be considered novel or cannot be considered to involve an inventive step when the document is taken alone
"Y" document of particular relevance; the claimed invention cannot be considered to involve an inventive step when the document is combined with one or more other such documents, such combination being obvious to a person skilled in the art.
"&" document member of the same patent family

Date of the actual completion of the international search	Date of mailing of the international search report
21 November 2003	12/12/2003
Name and mailing address of the ISA European Patent Office, P.B. 5818 Patentlaan 2 NL – 2280 HV Rijswijk Tel. (+31-70) 340-2040, Tx. 31 651 epo nl, Fax: (+31-70) 340-3016	Authorized officer Jobst, B

Form PCT/ISA/210 (second sheet) (July 1992)

INTERNATIONAL SEARCH REPORT

International Application No
PCT/US 03/24809

C.(Continuation) DOCUMENTS CONSIDERED TO BE RELEVANT

Category °	Citation of document, with indication, where appropriate, of the relevant passages	Relevant to claim No.
A	US 6 052 397 A (JEON HEONSU ET AL) 18 April 2000 (2000-04-18) column 2, line 66 -column 3, line 4	10,11, 13,14, 19,20
A	BEACH R J: "Theory and optimization of lens ducts" APPLIED OPTICS, 20 APRIL 1996, OPT. SOC. AMERICA, USA, vol. 35, no. 12, pages 2005-2015, XP002262395 ISSN: 0003-6935 the whole document	5,6,18
P,X	US 2003/063883 A1 (DEMARAY RICHARD E ET AL) 3 April 2003 (2003-04-03) cited in the application paragraphs '0044!,'0045!	1-20

Form PCT/ISA/210 (continuation of second sheet) (July 1992)

INTERNATIONAL SEARCH REPORT

Information on patent family members

International Application No
PCT/US 03/24809

Patent document cited in search report		Publication date	Patent family member(s)			Publication date
WO 0212932	A	14-02-2002	US	2002033330	A1	21-03-2002
			AU	7700201	A	18-02-2002
			TW	520450	B	11-02-2003
			WO	0212932	A2	14-02-2002
			US	2003127319	A1	10-07-2003
US 5689522	A	18-11-1997	NONE			
US 6052397	A	18-04-2000	US	6174748	B1	16-01-2001
US 2003063883	A1	03-04-2003	NONE			

This Page is Inserted by IFW Indexing and Scanning Operations and is not part of the Official Record

BEST AVAILABLE IMAGES

Defective images within this document are accurate representations of the original documents submitted by the applicant.

Defects in the images include but are not limited to the items checked:

- ☐ BLACK BORDERS
- ☐ IMAGE CUT OFF AT TOP, BOTTOM OR SIDES
- ☐ FADED TEXT OR DRAWING
- ☐ BLURRED OR ILLEGIBLE TEXT OR DRAWING
- ☐ SKEWED/SLANTED IMAGES
- ☐ COLOR OR BLACK AND WHITE PHOTOGRAPHS
- ☐ GRAY SCALE DOCUMENTS
- ☑ LINES OR MARKS ON ORIGINAL DOCUMENT
- ☐ REFERENCE(S) OR EXHIBIT(S) SUBMITTED ARE POOR QUALITY
- ☐ OTHER: _____

IMAGES ARE BEST AVAILABLE COPY.
As rescanning these documents will not correct the image problems checked, please do not report these problems to the IFW Image Problem Mailbox.

(12) INTERNATIONAL APPLICATION PUBLISHED UNDER THE PATENT COOPERATION TREATY (PCT)

(19) World Intellectual Property Organization
International Bureau

(43) International Publication Date
10 September 2004 (10.09.2004)

PCT

(10) International Publication Number
WO 2004/077519 A2

(51) International Patent Classification[7]: H01L

(21) International Application Number: PCT/US2004/005531

(22) International Filing Date: 26 February 2004 (26.02.2004)

(25) Filing Language: English

(26) Publication Language: English

(30) Priority Data:
60/451,178 27 February 2003 (27.02.2003) US
60/506,128 25 September 2003 (25.09.2003) US

(71) Applicants and
(72) Inventors: **NARASIMHAN, Mukundan** [IN/US]; 293 Bluefield Drive, San Jose, CA 91536 (US). **DEMARAY, Richard, E.** [US/US]; 190 Fawn Lane, Portola Valley, CA 94028 (US). **BROOKS, Peter** [US/US]; 611 Glen Alto Drive, Los Altos, CA 94024 (US).

(74) Agent: **GARRETT, Arthur, S.**; Finnegan, Henderson, Farabow Garrett & Dunner, L. L.P., 1300 I Street, N.W., Washington, DC 20005-3315 (US).

(81) Designated States *(unless otherwise indicated, for every kind of national protection available)*: AE, AG, AL, AM, AT, AU, AZ, BA, BB, BG, BR, BW, BY, BZ, CA, CH, CN, CO, CR, CU, CZ, DE, DK, DM, DZ, EC, EE, EG, ES, FI, GB, GD, GE, GH, GM, HR, HU, ID, IL, IN, IS, JP, KE, KG, KP, KR, KZ, LC, LK, LR, LS, LT, LU, LV, MA, MD, MG, MK, MN, MW, MX, MZ, NA, NI, NO, NZ, OM, PG, PH, PL, PT, RO, RU, SC, SD, SE, SG, SK, SL, SY, TJ, TM, TN, TR, TT, TZ, UA, UG, US, UZ, VC, VN, YU, ZA, ZM, ZW.

(84) Designated States *(unless otherwise indicated, for every kind of regional protection available)*: ARIPO (BW, GH, GM, KE, LS, MW, MZ, SD, SL, SZ, TZ, UG, ZM, ZW), Eurasian (AM, AZ, BY, KG, KZ, MD, RU, TJ, TM), European (AT, BE, BG, CH, CY, CZ, DE, DK, EE, ES, FI, FR, GB, GR, HU, IE, IT, LU, MC, NL, PT, RO, SE, SI, SK, TR), OAPI (BF, BJ, CF, CG, CI, CM, GA, GN, GQ, GW, ML, MR, NE, SN, TD, TG).

Published:
— *without international search report and to be republished upon receipt of that report*

For two-letter codes and other abbreviations, refer to the "Guidance Notes on Codes and Abbreviations" appearing at the beginning of each regular issue of the PCT Gazette.

(54) Title: DIELECTRIC BARRIER LAYER FILMS

(57) **Abstract:** In accordance with the present invention, a dielectric barrier layer is presented. A barrier layer according to the present invention includes a densified amorphous dielectric layer deposited on a substrate by pulsed-DC, substrate biased physical vapor deposition, wherein the densified amorphous dielectric layer is a barrier layer. A method of forming a barrier layer according to the present inventions includes providing a substrate and depositing a highly densified, amorphous, dielectric material over the substrate in a pulsed-dc, biased, wide target physical vapor deposition process. Further, the process can include performing a soft-metal breath treatment on the substrate. Such barrier layers can be utilized as electrical layers, optical layers, immunological layers, or tribological layers.

WO 2004/077519 A2

TITLE OF THE INVENTION

DIELECTRIC BARRIER LAYER FILMS

RELATED APPLICATIONS

[001] The present application claims priority to U.S. Provisional Application 60/451,178, "Dielectric Barrier Film," filed on February 27, 2003, by Richard E. Demaray, Mukundan Narasimhan, and Hongmei Zhang, herein incorporated by reference in its entirety, and to U.S. Provisional Application 60/506,128, "Indium Nucleation Layer," filed on September 25, 2003, by Mukundan Narasimhan and Peter Brooks, herein incorporated by reference in its entirety.

BACKGROUND

1. Field of the Invention

[002] The present invention is related to dielectric barrier films and, in particular, dielectric barrier films formed from high-density optical material layers for utilization in optical, electrical, tribological, and bio-implantable devices.

2. Discussion of Related Art

[003] Dielectric barrier layers are becoming increasingly important as protective layers for organic light emitting diodes (OLEDs) and other optical or opto-electronic devices. Typically, dielectric barrier layers are deposited thin films with the appropriate electrical, physical, and optical properties to protect and enhance the operation of other devices. Dielectric barrier layers can be utilized in optical, electrical, or tribological devices. For example, touch screen displays require

optically transparent protective layers to protect against transmission of atmospheric contaminants as well as to protect against physical wear.

[004] Many thin film deposition technologies that may be utilized to form such dielectric layers include some form of ion densification or substrate bias densification. The densification process eliminates the columnar thin film structure that is typical of vacuum deposited chemical vapor (CVD) or physical vapor deposition (PVD) thin films. It is well known that such densification can be achieved by a secondary ion source arranged to "bombard" the film during deposition. *See, e.g.*, W. Essinger "Ion sources for ion beam assisted thin film deposition," Rev. Sci. Instruments (63) 11-5217 (1992). *See, also,* Hrvoje Zorc, et al. Proceedings of the Society of Vacuum Coaters, 41st Annual Technical Conference Proceedings, 243-247, 1998, which discusses the effects of moisture exposure on wavelength shift for electron beam evaporated films (e-beams). In particular, Zorc et al. demonstrated a factor of 15 or so improvement in wavelength shift for electron beam evaporated films (e-beam) as compared to e-beam films deposited with a directed ion beam source after exposure to 30% humidity at 25 °C.

[005] D. E. Morton, et al. demonstrated wide-band dielectric pass filters comprised of alternating layers of SiO_2 and TiO_2 deposited using a "cold cathode ion source" to produce oxygen ions for the purpose of providing "moisture stable stacks of dense optical films of silicon dioxide as the low index material and either titanium dioxide, tantalum pentoxide or niobium pentoxide." D. E. Morton, et al. Proceedings of the Society of Vacuum Coaters, 41st annual Technical Conference, April 18-23, 1998. The results described by Morton, et al., indicated that room temperature

resistance to humidity up to 100% humidity was attained, as measured by the optical performance of single dielectric layers deposited on substrates mounted on a rotating platen. Optical extinction coefficients for the six samples tested in Morton, et al., varied from 0.1 to 1.6 ppt, indicating the presence of significant concentrations of defects or absorption centers in the dielectric layers. Additionally, no film thickness or film thickness uniformity data was reported by Morton, et al., for ion beam energies between 134 and 632 Volts and ion beam current up to 5 amps. Morton, et al., therefore fail to describe a film that would operate as a good barrier layer for optical devices.

[006] Self biased physical vapor deposition, such as ion coating or activated reactive deposition, are well-known means of providing hard wear resistant coatings. However, these coatings are either deposited at several hundred Volts of bias voltage and form penetrating surface treatments with the ion flux penetrating the surface to react with the substrate material, or they are ion assisted for the purpose of decreasing the columnar structure of the film. A "filtered cathodic vacuum arc" (FCVA-reference - http://www.nanofilm-systems.com /eng/fcva_technology.htm) has been used to form a dense film from an ion flux. In this case, ions are created and separated from the neutral vapor flux by a magnetic vector so that only species having a positive charge impinge the substrate. The bias voltage can be preset so that average translational energy ranges from about 50 to several hundred Volts are available. Lower ion energies are not reported due to the problem of extracting and directing a lower energy ion flux with a useful space charge density. Although quite rough due to re-sputtering at the high ion energies, hard protective layers of alumina,

and other materials such as tetrahedral carbon, can be deposited with this process on cutting tools and twist drills with commercial levels of utility. Due to the limitation of the coating species to the ion flux, coating rates are low. The best or hardest carbon films are often deposited with the lowest rate of deposition, e.g., 0.3 nanometers per second on substrates up to 12" in diameter.

[007] Transmission of a ZnO film deposited by FCVA at 600 nm wavelength is increased from about 50% at room temperature to above 80% for single films by increasing the temperature of deposition to above 230 °C, with the best transmission at 600 nm of about 90% at a deposition temperature of 430 °C and a substrate bias voltage not greater than about 50 Volts. This high temperature processing indicates the use of a thermal anneal process for repair of ion-induced damage to the films. For FCVA deposition with a 200 Volt bias the transmission is much reduced. FCVA films deposited in this fashion have been shown to be polycrystalline. The defect structures exhibited in the FCVA layer are too large for formation of effective optical barrier layers. Additionally, ion sputtering of crystalline films is dependent on the crystal orientation, leading to higher surface roughness. Defect structures formed in a protective layer can degrade the optical quality of the layer and also provide paths for diffusion of atmospheric contaminations through the layer, compromising the protective properties of the layer.

[008] Ion biased films have shown significant progress toward the goal of providing a satisfactory barrier for protection of electronic and optical films, such as, for example, photovoltaic, semiconducting and electroluminescent films. Particularly organic light emitting diodes, which utilize calcium or other very reactive metal

doped electrodes and other hydroscopic or reactive materials, can be protected by such films. However, the most biased process to date, the filtered Cathodic Vacuum Arc Coating Technology or FCVAC process, is reported to produce films with a particle density greater than about 1 defect per square centimeter. It may be that the high resputtering rate at the high voltages used in this process cause surface roughening. Certainly, the presence of a particle represents a defect through which diffusion of water vapor or oxygen can proceed. Also, the roughness of the surface formed by the FCVAC process impacts the stress and morphology and also the transparency and the uniformity of the index of refraction. The resputtered film may flake from the process chamber shields or be drawn to the film surface by the large electrostatic field present in an ion beam process. In any case, the particle defect density for particles greater than the film thickness also determines pin hole density or other defects caused by discontinuous deposition of the film because line of sight films can not coat over a particle that is larger than the thickness of the film, let alone a particle many times greater in size than the thickness of the film.

[009] In the case of ion-bias or self-bias energies exceeding several electron volts, the translational energy of the ion participating in the bias process can exceed the chemical binding energy of the film. The impacting ion, then, can either forward scatter atoms of the existing film or back sputter atoms of the existing film. Likewise, the participating ion can be adsorbed into the growing film or it can also scatter or absorb from the film surface. Sputtering of the existing film and scattering from the existing film are both favored at incoming angles of about 45° from the horizontal. In most ion coating processes, the ion beam is directed at a normal incidence to the

surface to be coated. However, as noted, at ion energies exceeding the chemical threshold, and particularly at energies exceeding 20 Volts or so, damage to the film or the substrate resulting from the ion energy in excess of the chemical binding energy is significant, and results in surface roughness, increased optical absorption characteristics, and creation of defects.

[010] In the case of the FCVA process, roughness is an increasing function of the film thickness, increasing from about 0.2 nanometers roughness for a 50 nanometer film to about 3 nanometers for a 400 nanometer Cu film indicating substantial roughening of the polycrystalline copper surface due to differential sputtering by the self biased incoming copper ions. Such a film will scatter light, particularly at the interface between two layers of different refractive index. To date, barrier or dielectric properties of FCVA produced films have not been found.

[011] Charging of the deposited film is also a particular problem with ion beam deposited dielectrics. To date, no low temperature dielectric and also no ion beam dielectric is known that has ever been shown to provide the electrical quality required for a transistor gate layer, for example. The ion beams embed charged ions in the film, leading to large negative flat band voltages and fields that can not be passivated at temperatures below about 450 °C. The surface charge of the dielectric layer results in slow accumulation of capacitance, preventing the sharp onset of conduction in a transistor application. Consequently, no as-deposited low temperature dielectric, biased or unbiased, has been proposed for low temperature transistor applications or is known at this time.

[012] Therefore, there is a need for high quality, dense dielectric layers for utilization as barrier layers in optical, electrical, tribological, and biomedical applications.

SUMMARY

[013] In accordance with the present invention, one or more dielectric layers formed from layers of metal-oxide materials deposited by a pulsed, biased, wide area physical vapor deposition process are presented. A dielectric barrier layer according to the present invention can be formed from at least one highly densified metal oxide layer. Dielectric barriers according to the present invention can be highly densified, highly uniform, ultra smooth amorphous layers with ultra low concentrations of defects, providing for superior performance as protective layers against physical wear and atmospheric contamination of underlying structures as well as overlying structures that may be deposited to form an electrical, optical, or medical device. Barrier layers according to the present invention can also be self-protecting optical layers, electrical layers, or tribological layers that can be utilized actively in optical or electrical devices.

[014] Therefore, barrier layers according to the present invention includes a densified amorphous dielectric layer deposited on a substrate by pulsed-DC, substrate biased physical vapor deposition, wherein the densified amorphous dielectric layer is a barrier layer. Further the deposition can be performed with a wide area target. A method of forming a barrier layer according to the present inventions includes providing a substrate and depositing a highly densified, amorphous, dielectric material over the substrate in a pulsed-dc, biased, wide target physical vapor deposition

process. Further, the process can include performing a soft-metal breath treatment on the substrate.

[015] Dielectric barrier stacks can include any number of individual layers including one or more barrier layers according to the present invention. In some embodiments, the individual barrier layers can be optical layers. Typically, alternating layers of low and high index of refractory metal oxide materials can be arranged to form anti-reflective or reflective coatings in optical devices, for example. As such, dielectric barriers according to the present invention provide a protective function as well as being a functional part of an optical device. In some embodiments of the invention, for example, dielectric barriers according to the present invention can be utilized in cavity enhanced LED applications, or in formation and protection of transistor structures. Additionally, the beneficial dielectric properties of some embodiments of barrier layers according to the present invention can be utilized as electrical layers to form resistors or capacitive dielectrics.

[016] In some embodiments, a soft metal (e.g., indium) breath treatment can be utilized before deposition of a barrier layer. Such a breath treatment is shown to significantly improve surface roughness and enhance WVTR characteristics for embodiments of barrier layers according to the present invention.

[017] These and other embodiments of the invention are further discussed and explained below with reference to the following Figures. It is to be understood that both the foregoing general description and the following detailed description are exemplary and explanatory only and are not restrictive of the invention, as claimed. Further, specific explanations or theories regarding the deposition or performance of

barrier layers or soft-metal breath treatments according to the present invention are presented for explanation only and are not to be considered limiting with respect to the scope of the present disclosure or the claims.

BRIEF DESCRIPTION OF THE DRAWINGS

[018] Figures 1A and 1B illustrate a deposition apparatus for depositing barrier layer films according to the present invention.

[019] Figure 1C illustrates a barrier layer deposited on a substrate according to embodiments of the present invention.

[020] Figures 2A, 2B, 2C, 2D, 2E and 2F illustrate examples of devices with dielectric stacks of barrier layers according to embodiments of the present invention.

[021] Figure 3 shows a microcavity enhanced LED structure utilizing dielectric stacks of barrier layers according to embodiments of the present invention.

[022] Figure 4 shows a bottom gate transistor device with a dielectric stack of barrier layers according to embodiments of the present invention.

[023] Figure 5 shows a top gate transistor device with a dielectric stack of barrier layers according to embodiments of the present invention.

[024] Figure 6 shows an example of a microcavity enhanced LED structure similar to that shown in Figure 3 further protected by a dielectric stack of barrier layers according to embodiments of the present invention.

[025] Figure 7 shows another example of a microcavity enhanced LED structure similar to that shown in Figure 3 further protected by a dielectric stack of barrier layers according to embodiments of the present invention.

[026] Figure 8 shows an example TiO_2 barrier layer according to embodiments of the present invention deposited on a reactive aluminum layer after exposure to a high humidity, high temperature environment for an extended period of time.

[027] Figure 9 shows an example silica/alumina barrier layer according to embodiments of the present invention deposited on a reactive aluminum layer after exposure to a high humidity, high temperature environment for an extended period of time.

[028] Figure 10 shows an SEM photograph of a cross section of an embodiment of a dielectric stack of barrier layers according to embodiments of the present invention.

[029] Figure 11 shows transmission versus wavelength curves for various examples of dielectric stacks of barrier layers according to embodiments of the present invention.

[030] Figures 12A and 12B illustrate a single barrier layer structure deposited with and without a soft-metal breath treatment according to embodiments of the present invention.

[031] Figure 13 shows a Flexus Stress Measurement apparatus that can be utilized to test barrier layers.

[032] Figure 14 illustrates a measurement of the wafer bow using the Flexus Stress Measurement apparatus illustrated in Figure 13.

[033] Figure 15 illustrates the stress in various deposited barrier layers according to embodiments of the present invention as a function of temperature through a single temperature cycle after deposition.

[034] Figures 16A, 16B, 16C, and 16D show atomic force microscopy measurements of surface roughness for some barrier layer films according to embodiments of the present invention.

[035] Figure 17 illustrates a water vapor transmission test that can be utilized to characterize barrier layers deposited according to embodiments of the present invention.

[036] Figures 18A through 18D illustrate the effects of different In/Sn breath treatment parameters on the surface roughness of the deposited barrier layer according to the present invention.

[037] Figures 19A and 19B illustrate the effects of the substrate on surface roughness.

[038] Figure 20 illustrates a barrier layer according to the present invention that further operates as a thin film gate oxide.

[039] Figures 21A and 21B illustrate the effect of substrate composition on the surface roughness of a deposited barrier layer according to the present invention.

[040] Figures 22A and 22B illustrate that the character of the barrier layer deposition according to embodiments of the present invention effect surface roughness.

[041] In the figures, elements having the same designation have the same or similar functions.

DETAILED DESCRIPTION

[042] Barrier layers according to some embodiments of the present invention are deposited in a pulsed-dc, substrate biased, wide target physical vapor deposition process that is described further below with respect to some particular examples of such barrier layers. Some embodiments of barrier layers according to embodiments of the present invention can be characterized as highly densified, highly uniform, highly amorphous layers with particularly low defect concentrations and high surface smoothness. Further, barrier layers according to embodiments of the present invention can have beneficial optical and electrical characteristics that allow such barrier layers to be self-protecting optical or electrical layers in optical or electrical devices formed with these layers.

[043] For example, some embodiments of barrier layers according to the present invention can have excellent optical transparency characteristics. Further, the index of refraction of individual barrier layers is dependent on the material of deposition and therefore stacking of multiple barrier layers according to the present invention can result in highly controllable, and self protecting, reflecting or anti-reflecting coatings for optical devices. Additionally, barrier layers according to some embodiments of the present invention can be doped with optically active impurities to form optically active layers, which are also self-protecting. For example, depositions of rare-earth ions such as Erbium or Ytterbium can result in optical amplifiers or frequency converters.

[044] Additionally, embodiments of barrier layers according to the present invention can have highly beneficial dielectric properties and can therefore be utilized as self-protecting electrical layers. Some barrier lavers according to embodiments of

the present invention, for example, can be utilized as resistance layers. Other embodiments can be utilized as high-dielectric constant layers in capacitor devices. Embodiments of dielectrical barrier layers that are useful for such devices are further discussed below.

[045] RF sputtering of oxide films is discussed in Application Serial No. 09/903,050 (the '050 application), filed on July 10, 2001, by Demaray et al., entitled "Planar Optical Devices and Methods for Their Manufacture," assigned to the same assignee as is the present invention, herein incorporated by reference in its entirety. Further, targets that can be utilized in a reactor according to the present invention are discussed in U.S. Application serial no. 10/101,341, filed on March 16, 2002, assigned to the same assignee as is the present invention, herein incorporated by reference in its entirety. Methods of depositing oxides in a pulsed-dc, substrate biased, wide-target physical vapor deposition (PVD) process are further discussed in U.S. Application serial no. 10/101863, filed on March 16, 2002, (hereinafter referred to as "the pulsed, biased process") assigned to the same assignee as is the present application, herein incorporated by reference in its entirety.

[046] Figures 1A and 1B illustrate a reactor apparatus 10 for sputtering of material from a target 12 according to embodiments of the present invention. In some embodiments, apparatus 10 may, for example, be adapted from an AKT-1600 PVD (400 X 500 mm substrate size) system from Applied Komatsu or an AKT-4300 (600 X 720 mm substrate size) system from Applied Komatsu, Santa Clara, CA. The AKT-1600 reactor, for example, has three or four deposition chambers connected by a vacuum transport chamber. These AKT PVD reactors can be modified such that

pulsed DC power is supplied to the target and RF power is supplied to the substrate during deposition of a material film.

[047] Apparatus 10 includes a target 12 which is electrically coupled through a filter 15 to a pulsed DC power supply 14. In some embodiments, target 12 is a wide area sputter source target, which provides material to be deposited on substrate 16. Substrate 16 is positioned parallel to and opposite target 12. Target 12 functions as a cathode when power is applied to it and is equivalently termed a cathode. Application of power to target 12 creates a plasma 53 below target 12. Magnet 20 is scanned across the top of target 12. Substrate 16 is capacitively coupled to an electrode 17 through an insulator 54. Electrode 17 can be coupled to an RF power supply 18.

[048] For pulsed reactive dc magnetron sputtering, as performed by apparatus 10, the polarity of the power supplied to target 12 by power supply 14 oscillates between negative and positive potentials. During the period of positive potential, the insulating layer on the surface of target 12 is discharged and arcing is prevented. To obtain arc free deposition, the pulsing frequency of pulsed DC power supply 14 can exceed a critical frequency that can depend, at least partly, on target material, cathode current and reverse time. High quality oxide films can be made using reactive pulse DC magnetron sputtering in apparatus 10.

[049] Pulsed DC power supply 14 can be any pulsed DC power supply, for example an AE Pinnacle plus 10K by Advanced Energy, Inc. With this example supply, up to 10 kW of pulsed DC power can be supplied at a frequency of between 0 and 350 KHz. The reverse voltage is 10% of the negative target voltage. Utilization

of other power supplies will lead to different power characteristics, frequency characteristics and reverse voltage percentages. The reverse time on this embodiment of power supply 14 can be adjusted to between 0 and 5 μs.

[050] Filter 15 prevents the bias power from power supply 18 from coupling into pulsed DC power supply 14. In some embodiments, power supply 18 is a 2 MHz RF power supply and, for example, can be a Nova-25 power supply made by ENI, Colorado Springs, Co. Therefore, filter 15 is a 2 MHz band rejection filter. In some embodiments, the band-width of the filter can be approximately 100 kHz. Filter 15, therefore, prevents the 2 MHz power from the bias to substrate 16 from damaging power supply 18.

[051] However, both RF and pulsed DC deposited films are not fully dense and most likely have columnar structures. These columnar structures are detrimental for optical applications and to formation of barrier layers due to the scattering loss and pinholes caused by the structure. By applying a RF bias on wafer 16 during deposition, the deposited film can be densified by energetic ion bombardment and the columnar structure can be substantially eliminated.

[052] In the production of some embodiments of a barrier layer according to the present invention using, for example, the AKT-1600 based system, target 12 can have an active size of about 675.70 X 582.48 by 4 mm in order to deposit films on substrate 16 that can have dimension about 400 X 500 mm. The temperature of substrate 16 can be held at between about 50C and 500C. The distance between target 12 and substrate 16 can be between about 3 and about 9 cm. Process gas (for example, but not limited to, mixtures of Ar and O_2) can be inserted into the chamber

of apparatus 10 at a rate up to about 200 sccm while the pressure in the chamber of apparatus 10 can be held at between about 0.7 and 6 millitorr. Magnet 20 provides a magnetic field of strength between about 400 and about 600 Gauss directed in the plane of target 12 and is moved across target 12 at a rate of less than about 20-30 sec/scan. In some embodiments utilizing the AKT 1600 reactor, magnet 20 can be a race-track shaped magnet with dimension about 150 mm by 600 mm.

[053] Figure 1C shows a dielectric barrier layer 110 deposited on a substrate 120 according to the present invention. Substrate 120 can be any substrate, for example plastic, glass, Si-Wafers or other material. Substrate 120 may further include devices or structures that can be protected by barrier layer 110, such as organic light-emitting diode (OLED) structures, semiconductor structures, or other barrier layer structures. Barrier layer 110 can be a metallic oxide where the metal can be Al, Si, Ti, In, Sn or other metallic oxides, nitrides, halides, or other dielectrics. For example, a high index of refraction barrier layer can be formed by deposition of TiO_2 from a titanium target with example deposition parameters designated as 7KW/200W/200KHz/60Ar/90O2/950s (7 KW of pulsed-dc target power, 200 W of substrate bias power, 200 KHz is the pulsing frequency of the pulsed-dc target power, 60 sccm Ar gas flow, 90 sccm O_2 gas flow, 950s total deposition time). Another example lower index of refraction barrier layer can be formed from a target that is 92% Al and 8% Si (i.e. 92-8 or 92/8 layers) in a process designated as 3KW/200W/200KHZ/85Ar/90O2/1025 (3KW of pulsed-dc target power, 200 W of substrate bias power, 200 KHz pulsing frequency of the pulsed-dc target power, 85 sccm Ar flow, 90 sccm O_2 flow for 1025 sec of deposition time). As is further

discussed below, a wide range of process parameters can be utilized to deposit barrier layers according to the present invention.

[054] Barrier layers according to the present invention can be formed from any oxide materials. For example, MgO, Ta_2O_5, TiO_2, Ti_4O_7, Al_2O_3, SiO_2, silicon-rich SiO_2, and Y_2O_3. Oxide compounds of Nb, Ba, Sr, and Hf can also be utilized to form barrier layers according to the present invention. Further, barrier layers can be doped with rare-earth ions to produce optically active layers. Parameters provided herein for deposition of particular layers (e.g., the TiO_2 layers and the 92-8 layers discussed above) are exemplary only and are not intended to be limiting. Further, individual process parameters are approximations only. A wide range of individual parameters (e.g., power levels, frequencies, gas flows, and deposition times) around those stated can be used to form barrier layers according to the present invention.

[055] Dielectric barrier layer 110 can be characterized as a highly dense, uniform, defect free amorphous dielectric layer that may also have high optical transparency. Such films can be deposited in a pulsed-dc, substrate biased PVD process from a metallic target in an Ar/O_2 gas flow. As is further discussed below, some embodiments of dielectric barrier layer 110 have excellent surface roughness characteristics as well. Typically, as is discussed further below and with the examples and data provided, water vapor transmission rates for dielectric films according to embodiments of the present invention are tested in a MOCON test apparatus (MOCON referes to MOCON testing service of Minneapolis, MN) to be less than 1×10^{-2} $gm/m^2/day$ and are often less than 5×10^{-3} $gm/m^2/day$.

[056] Dielectric barrier stacks can be formed by depositing further barrier layers over barrier layer 110. Any number of stacked barrier layers can be utilized in order that the resulting structure not only function as a barrier layer, but may have other purposes in the resulting device as well. Further, a soft metallic breath treatment may be applied prior to deposition of a barrier layer according to embodiments of the present invention. A soft-metallic breath treatment refers to exposure of the substrate to a soft metallic vapor, as is further explained below.

[057] Figure 2A shows an embodiment of a dielectric stack 120 that can be utilized as a barrier structure as well as providing further optical functions. Dielectric stack 120 includes multiple barrier layers 101, 102, 103, 104, and 105 according to embodiments of the present invention. Each of barrier layers 101, 102, 103, 104, and 105 can be deposited utilizing deposition methods as described with more detail in U.S. Application Serial No. 10/101,863. The deposition is described generally above with respect to apparatus 10. In general, dielectric stack 120 can include any number of layers. In particular, dielectric stack 120 can include only a single barrier layer. The particular example of a barrier stack 120 shown in Figure 2A includes five layers, layers 101, 102, 103, 104 and 105. In the example of dielectric stack 120 shown in Figure 2A, dielectric layers 101, 103 and 105 are formed of a high index material such as titania (TiO_2). Layers 102 and 104 can be formed of a low index material such as silica (SiO_2), possibly doped with alumina (e.g., 92% silica and 8% alumina by cation percents, the 92-8 layer). Barrier stack 120 can be deposited directly on a substrate 100 as shown in Figure 2A or deposited on a layer 107 as shown in Figure 2D. Layer 107 is a layer to be protected from atmospheric contaminants or physical

damage and may include an optical or electrical device or another layer. Substrate 100 is a substrate on which layer 107 or dielectric stack 120 is formed. In some embodiments, substrate 100 can also provide a barrier to atmospheric contamination of layer 107. In some devices, further structures may be deposited over barrier layer structure 120.

[058] Table 1 illustrates deposition parameters for some example dielectric stack structures 120 according to the present invention. As described above, each of stacks 120 illustrated in Table 1 are formed utilizing an AKT 4300 PVD system using a Biased Pulsed DC Reactive Scanning Magnetron PVD Process as further described in U.S. Patent Application Serial No. 10/101,863, which has been previously incorporated by reference. Further, apparatus 10 as described above with respect to Figures 1A and 1B, can be clustered in the AKT 4300 PVD system with a loadlock chamber, an outgassing chamber, and may be equipped with plasma shields and a shield heater. As shown in Figure 2A, dielectric stack 120 for these examples includes 5 layers -- 3 alternating layers of TiO_2 and 2 layers of 92-8 SiO_2/Al_2O_3 (92%/8% by cation concentration).

[059] Dielectric stack 120 for each of the stacks shown in Table 1 was deposited directly on substrate 100. Substrate 100 for each of the stacks formed was first loaded into the loadlock of apparatus 10. The loadlock of apparatus 10 was pumped to a base pressure of less than about 10^{-5} Torr. The sheets of substrate 100, which may be of glass or plastic, was then transferred to a heat chamber of apparatus 10 and held at a temperature of about 300 °C for about 20 mins in order to outgas any moisture already accumulated by substrate 100. For polymer based substrates, for

example, the pre-heat step can be eliminated or performed at a lower temperature depending on the plastic substrate used. In some cases, the substrate and shield heaters of apparatus 10 can be disabled. The substrate column of Table 1 shows the composition of substrate 100 utilized in the deposition process.

[060] In each of stacks 1 through 6 illustrated in Table 1, the composition of the dielectric barrier layers in dielectric stack 120 is TiO_2/92-8/TiO_2/92-8/TiO_2, indicating that layers 101, 103 and 105 as shown in Figure 2A are TiO_2 layers and layers 102 and 104 as shown in Figure 2A are SiO_2/Al_2O_3 (92%/8% by cation concentration). The TiO_2 layers are deposited with the parameters shown in the TiO_2 Deposition Process column. The process details are given in the format: target power/bias power/pulsing frequency/Ar flow/O_2 flow/deposition time. Target power refers to the power supplied to target 12 of apparatus 10. Bias power refers to the power supplied by bias generator 18 to electrode 17 on which substrate 100 is mounted in place of substrate 16 as shown in Figure 1A and capacitively coupled to electrode 17. The Ar and O_2 flow rates across substrate 100 are then described in units of standard cubic centimeter/min (sccm). Finally, the deposition time is given. For example, the TiO_2 layers for stack number 1 illustrate in Table 1 were deposited with a target RF power of about 7 kW, with about 200 W of bias power, pulse frequency of about 200 KHz, an Ar flow rate of about 60 sccms, an O_2 flow rate of about 90 sccms, and a deposition time of about 950s. The measured thickness of a typical TiO_2 layer deposited according to the process described in the TiO_2 Deposition Process column is shown in the measured thickness TiO_2 column of Table 1.

[061] Similarly, the deposition parameters for deposition of silica/alumina layers for each dielectric stack 120 shown in Table 1 are shown in the silica/alumina (92/8) deposition process column. As indicated, each of the silica/alumina layers for stack numbers 1-6 shown in Table 1 are about 92% Silica and about 8% alumina by cation concentration. For example, in stack number 1 illustrated in Table 1, the silica/alumina layers were deposited with the power to target 12 being about 3 kW, the bias power to electrode 17 was about 200 W, the frequency of pulsed DC power supply 14 was about 200 kHz, the Ar flow rate was about 85 sccm, the O_2 flow rate was about 90 sccm, and the deposition time was about 1,005 sec.

[062] In general, in this disclosure a dielectric barrier layer referred to as 92/8 layer refers to a barrier layer formed from continuous deposition of a dielectric barrier layer from the 92% Silica/8% Alumina target. A dielectric barrier layer referred to as a 92-8 layer refers to a barrier layer formed in steps from the 92% Silica/8% Alumina target. A 92-8 layer can be formed, for example, on plastic substrates whereas 92/8 layers can be formed on Si-wafers or glass substrates that are not so sensitive to heat.

[063] In each of the stacks illustrated in Table 1, the reverse time for pulsed-DC power supply 14 was fixed at about 2.3 microseconds. The spacing between target 12 and substrate 100 was ~60mm, and the spacing between magnet 20 and target 12 was ~4-5 mm. The temperature of substrate 100 was about 200 °C and the shield heater of apparatus 10 was set to about 250 °C. The home offset of magnet 20 was set to be about 20 mm and the scan length was about 980 mm. The total pressure inside the chamber of apparatus 10, in plasma 53, during deposition of the

TiO_2 layers was about 5-6 mT. The total pressure inside the chamber, in plasma 53, during deposition of the silica/alumina layers was about 8-9 mT.

[064] In some barrier stacks according to the present invention, barrier layers are deposited by a reactively sputtered thin film layer or layers, formed by a process as previously described in the pulsed, biased deposition process, U.S. Application Serial No. 10/101,863. The pulsed, biased deposition process combines optical quality vacuum films having uniquely dense morphologies free of the columnar defects that are typical of non-biased vacuum thin films with parts per million uniformity and control of the optical index and birefringence. Very high resolution ellipsometry also demonstrates that a wide range of film index can be deposited with extinction coefficients which are zero across the visible and in the near IR region, and uniform on the order of parts per million providing substantially perfect transparency. As a result of the high level of densification and the low defect concentration, it is demonstrated that these very transparent films also provide superior diffusion barrier protection for moisture ingress as measured by steam permeation. Lastly, the same films demonstrate much higher dielectric breakdown under high voltage stress, also a result of the low levels of defects.

[065] Figure 8 shows a sample after exposure to a high-humidity, high temperature environment for an extended period of time. In the sample shown in Figure 8, about 200 nm of TiO_2 was deposited on a reactive aluminum layer that had been deposited on a 4" silicon wafer. The sample was kept in a chamber at about 85 °C with a relative humidity of about 100% for about 500 hours. As can be seen in

Figure 8, no defects are visible on the wafer indicating a high level of protection of the underlying reactive aluminum layer.

[066] Figure 9 shows a sample with a silica/alumina layer according to the present invention after exposure to a high-humidity, high-temperature environment for an extended period of time. In the sample shown in Figure 9, about 10 nm of aluminum is deposited on a 4" silicon wafer. About 100 nm of silica/alumina is deposited over the aluminum. The sample was then placed in a pressure cooker at about 250 °C with about 3.5 atm of saturated steam for about 160 hours. Again, no defects are visible on the wafer indicating a high level of protection of the underlying reactive aluminum layer. In another example, the thin reactive Al on a Si wafer was tested under the same conditions without a barrier layer and became transparent within minutes of the testing.

[067] Selected metal oxide films deposited with the previously disclosed process, from tens of nanometers to more than 15 microns, are not only impervious to moisture and chemical penetration as a film, but can also provide protection to an underlying layer or device from the effect of gas or moisture ingress while serving as an optical, electrical and/or tribological layer or device, rendering substantial manufacturing and environmental margins to the respective layers and devices. The subject process has been demonstrated on wide area substrates of glass and metal as well as low temperature material such as plastics.

[068] Table 4 shows Vickers Hardness (MPa) values obtained by testing an Al_2O_3 barrier layer and an Er-doped alumina/silicate (40% alumina/60% silica) films on a Si-Wafer. The Al_2O_3 barrier layer was deposited in a

3kW/100W/200KHz/30Ar/44O2/t process with a 2.2 μs reverse time. The Er, Yb doped Al_2O_3 was deposited with the process 6kW/100W/120KHz/60Ar/28O2/t process with a 1.2 μs reverse time. As can be seen in Table 4, the hardness as indicated generally by the Vickers number is large compared to conventionally deposited alumina films.

[069] Returning to Figure 2A, a dielectric stack 120 is deposited on substrate 100. Each of barrier layers 101, 102, 103, 104, and 105 can be optical layers (i.e., layers that are optically useful). Substrate 100 may be any glass, plastic, metallic, or semiconductor substrate. The thickness of layers 101, 102, 103, 104, and 105 of dielectric stack 120 can be varied to form either an anti-reflective coating or a reflective coating. Figure 2B shows a transparent conducting layer 106 deposited over dielectric stack 120. Transparent conducting layer 106 can be, for example, an indium tin-oxide layer. Figure 2C illustrates a substrate 100 with dielectric stacks 120 deposited on both a top surface and a bottom surface of substrate 100. The particular example shown in Figure 2C includes an embodiment of dielectric stack 120 with layers 101, 102, 103, 104, and 105 deposited on a top surface of substrate 100 and another embodiment of dielectric stack 120, shown having layers 108, 109, 110, 111, and 112 in Figure 2C, deposited on the bottom surface of substrate 100. Again, layers 108, 110, and 112 may be high index layers according to the present invention (e.g., TiO_2 layers) and layers 109 and 111 may be lower index layers such as silica/alumina layers. Examples of deposition parameters for dielectric stack 120 can be found in Table 1. As another example of a stack of barrier layers according to the present invention that provides good transmission characteristics is a four-layer stack

$TiO_2/SiO_2/TiO_2/SiO_2$ layering of thicknesses 12.43 nm, 36.35 nm, 116.87 nm, and 90.87 nm, respectively, deposited on glass provides a high transparency in the wavelength range of about 450 nm and 650 nm.

[070] In Figure 2D dielectric stack 120 is shown protecting a layer 107. Layer 107 is any layer of material that should be protected by a transparent barrier layer. For example, layer 107 may be a reactive metal such as aluminum, calcium or barium, layer 107 may be a fragile layer such as a conductive transparent oxide, or layer 107 may include an active optical or electrical device. As discussed above, the individual layers of dielectric stack 120 can provide protection both from incursion of atmospheric contaminants and protection against physical damage of layer 107. In some embodiments, the layer thickness of dielectric layers (e.g., layers 101, 102, 103, 104, and 105 shown in Figure 2D) of dielectric stack 120 are arranged to form either a transparent or reflective film at particular wavelengths. One skilled in the art can determine the thickness of individual films in dielectric stack 120 to form a reflective or anti-reflective film of dielectric stack 120. In some embodiments, where layer 107 is a metal such as aluminum, barium, or calcium, the device shown in Figure 2D forms a highly stable mirror. Figure 2E shows a dielectric stack 120 protecting a layer 107 where layer 107 has been deposited on substrate 100. Further, a transparent conducting layer 106 has further been deposited over dielectric stack 120. Figure 2F shows a structure where a second barrier stack 120 has been deposited on the bottom surface of substrate 100.

[071] Figure 10 shows a cross sectional SEM view of an example dielectric stack according to the present invention. Again, a five-layer TiO2/92-8 stack is

shown with thickness 550 nm for the TiO_2 layers and 970 nm for the 92-8 silica/alumina. The example shown in Figure 10 is a dielectric mirror stack such as that used to form a microcavity LED.

[072] Although Figures 2A through 2F show various configurations and utilizations of a barrier stack 120 having five layers, in general, a barrier stack 120 according to the present invention may be formed of any number of barrier layers. Further, the examples of barrier layers 101, 102, 103, 104, and 105 illustrated in Figures 2A through 2F illustrate examples of optical layers according to the present invention where those optical layers also function as self-protecting barrier layers in that they protect themselves as well as the particular surface or device on or below which they are deposited. Additionally, one or more of barrier layers 101, 102, 103, 104, and 105 may include optically active dopant ions such as rare-earth ions in order to provide more optically active functionality. Further, in accordance with the present invention, one or more of layers 101, 102, 103, 104, and 105 may be layers other than barrier layers according to the present invention. Each of the barrier layers described with respect to Figures 2A through 2F can be deposited utilizing a pulsed, biased deposition process as has been described in U.S. Application Serial No. 10/101,863 to form a highly densified layer of material with very low defect concentrations.

[073] Figure 3 shows another structure 321 utilizing dielectric stacks of barrier layers according to the present invention. As shown in Figure 3, structure 321 includes a dielectric stack 315 deposited on a substrate 316. Substrate 316 may be formed, for example, of glass or plastic materials. A transparent conductive layer 314, such as for example indium tin oxide, is deposited on dielectric stack 315. Layer

313 can be an electroluminescence layer such as, for example, a phosphor-doped oxide or fluoride material, rare earth doped silicon rich oxide light emitting device, or an organic light emitting polymer, OLED (organic light emitting diode) or polymer stack. A metal layer 312, which may be aluminum and may be doped with calcium or barium, is deposited on the side near layer 313. A second dielectric stack 317 can be formed on the bottom of substrate 316.

[074] Structure 321 illustrated in Figure 3 is an example of a microcavity enhanced LED, protected from water and reactive gas which may diffuse through substrate 316 by dielectric stacks 315 and 317. When layer 312 is a metal layer, a microcavity is formed between layer 312 and dielectric stack 315. Dielectric stack 315 can out-couple light emitted from electroluminescence layer 313. Layer 313 emits light when it is electrically biased as a result of a voltage applied between transparent conducting layer 314 operating as an anode and conducting layer 312 operating as a cathode. The layers of dielectric stack 315 and dielectric stack 317 may be arranged to contain the light emitted by layer 313 between layer 317 and metallic layer 312, forming an etalon arrangement to guide light along substrate 316. Additionally, dielectric layer 317 may be arranged to transmit light produced by layer 313, thereby forming a monitor arrangement with light being emitted substantially normal to substrate 316.

[075] Figure 11 illustrates the transmission data collected from examples of dielectric stacks according to the present invention. The metrology equipment utilized in taking the data resulting in Figure 11 was a Perkin Elmer Lambda-6 Spectrophotometer. Four samples were measured and each were 5 layer stacks of

TiO_2/92-8 as described above. Two samples have the same thickness layers (55 nm TiO_2 and 100 nm 92-8). As illustrated in Figure 11, the two different runs have almost the same transmission spectrum demonstrating the repeatability of the deposition process. The third example had a different thickness arranged so as to shift the transmission spectrum towards the blue. The fourth example was generated after the third example was maintained under 85/85 (85 C 85 % humidity) test conditions for 120 hours. It can be observed that the humidity and heat did not have a significant impact on the transmission characteristics of the mirror stack, again demonstrating the functionality of such dielectric stacks as protection layers as well as optical layers (i.e., no measurable wet-shift). A similar result was obtained after 500 hours of test with the 85/85 conditions with no measurable wet-shift.

[076] Figure 6 shows an example of another structure 633 with a microcavity enhanced LED structure 321 as described with Figure 3 covered and protected by a structure 622 such as those shown in Figures 2A through 2F. In structure 321, as shown in Figure 6, layers 314, 313, and 312 have been patterned. A structure 622 with dielectric stacks 618 and 620 deposited on opposite sides of a substrate 619 can be formed separately. Dielectric stacks 618 and 619 are formed as described with dielectric stacks 120 of Figures 2A through 2F. Structure 622 can then be epoxied over structure 321 in order to seal and protect structure 321. Epoxy layer 621, for example, can be an EVA epoxy.

[077] Figure 7 shows another structure 700 with an example of a microcavity enhanced LED structure 321 as described with Figure 3 covered and protected by a structure 623 such as those shown in Figures 2A through 2F. Covering

structure 623 includes substrate 619, with dielectric stack 620 deposited on substrate 619, epoxied to device 321.

[078] Figure 4 illustrates another example of barrier layers according to the present invention that also function as electrical layers (i.e., layers with electrical function such as providing resistance or function as the dielectric in a capacitor structure). The structure shown in Figure 4 illustrates an example of a bottom gate transistor structure 422 according to the present invention. Transistor structure 422 is formed on a substrate 416, which may be a plastic or glass material. In the embodiment illustrated in Figure 4, a dielectric stack 415 according to the present invention is deposited on a top surface of substrate 116 and a second dielectric stack 417 according to the present invention is deposited on a bottom surface of substrate 116. Dielectric stacks 417 and 415 each can include layers of high index and low index dielectric materials, as discussed above. The high index and low index dielectric materials, for example TiO_2 and silica/alumina layers as described above, each have low-voltage flat bands and low surface defects and therefore are suitable for use as thin film transistor structures. A semiconductor layer 423 is deposited on barrier stack 415 and patterned. Semiconductor layer 423 can be a semiconductor such as silicon, germanium, or may be of zinc oxide or a polymer material. Layers 424 and 425 form source and drain layers in contact with semiconductor layer 423. Layer 426 can be formed of a material with a high dielectric constant, such as any of the dielectric layers forming dielectric stacks 415 and 417, for example the high-dielectric strength TiO_2 material deposited by the processes described here. Layer 427 is an inter layer and layer 428 is the gate metal.

[079] Figure 5 shows an example of a top gate transistor device 529. Transistor device 529 is formed on a substrate 516 that is protected from atmospheric contamination (for example water or gasses) and physical wear and abrasion by dielectric stacks 515 and 517. Dielectric stacks 515 and 517 are formed from one or more layers of optical material as discussed above with dielectric stack 120. Gate layer 530 is deposited on dielectric stack 515. Layer 530 may be a metallic layer such as aluminum or chrome. A gate oxide layer 531 is deposited over layer 530. A semiconductor layer 532 is deposited on gate oxide layer 531 over layer 530. Semiconducting layer 532 can be similar to layer 423 of Figure 4. Layers 533 and 534 are source and drain layers, respectively, and are similar to layers 424 and 428 of device 422 of Figure 4 and may be formed from a conducting metal, conducting oxide, or a conducting polymer, for example.

[080] Dielectric stacks with barrier layers according to the present invention can have atomically smooth film surfaces, independent of the film thickness. Additionally, dielectric stacks with barrier layers according to the present invention can have film transparencies that are unmeasurably different from zero. These dielectric stacks represent a new capability for biased barrier film defect levels and barrier protection. Few products requiring dielectric barrier protection from water and oxygen, such as OLED displays, can tolerate a defect every square centimeter. Some embodiments of barrier layers as 2.5 nanometers and as thick as 15 microns have been deposited that exhibit an average surface roughness of about 0.2 nm, indicating a damage free process. Such layers exhibit an optical quality surface for all film thicknesses deposited, representative of the high amorphous film uniformity

attainable with these processes that produce embodiments of the barrier layer according to the present invention.

[081] Dielectric barrier layers according to the present invention have been shown to protect ultra thin reactive metal films of aluminum from steam heat oxidation from 125 to 250 °C at pressures of 3.5 ATM of pure steam for hundreds of hours with no visible defect on 100mm silicon wafers. Consequently, it is clear that both titanium oxide and alumina/silicate barrier layers, as described herein, can provide long term protection of reactive films which are pin hole free up to the area of one or both wafers. One pin hole in the protective dielectric barrier on a 100 mm wafer, with an area of approximately 75 square centimeters, would translate into a pin hole density of about 0.0133 per square centimeter. As shown in Figures 8 and 9, there were two wafers, one with aluminosilicate and one with titania barrier dielectric coatings, that were failure free. The total area between the two wafers was 150 square centimeters. If there were 1 defect on these two wafers the defect density would be 0.00666 per square centimeter. However, since the wafers were free of defects, the actual defect density could not be measured from the results of only two wafers. As indicated, then, the actual defect density was less than 0.0133 per square centimeter and likely less than 0.007 per square centimeter.

[082] In some embodiments of the invention, a soft metal, such as indium or indium-tin, breath treatment can be performed before deposition of one or more barrier layers such as those discussed above. It is likely that the soft metal breath treatment can be utilized to release stress between the dielectric barrier layer and the

substrate. Further, the soft metal breath treatment can act to nucleate for further growth of pin-hole free or defect-free barrier layer films on the substrate.

[083] Figures 12A and 12B show a single barrier layer structure 1200 with deposited on a substrate 1201 with and without a soft-metal breath treatment according to the present invention. In Figure 12A, a barrier layer 1203 such as is described above is deposited directly on substrate 1201. Substrate 1201 can be any suitable substrate material, including glass, plastic, or Si Wafers, for example. Substrate 1201 can, for example, include an OLED structure or other optically active structure which requires high optical throughput or an electrical structure that may utilize the barrier layers as electrical layers. Barrier layer 1203 can be any one or more barrier layers as is described above. As illustrated in Figure 12A, barrier layer 1203 can develop stress-related surface roughness during deposition and use.

[084] Figure 12B illustrates the results of depositing barrier layer 1203 following a soft-metal breath treatment according to some embodiments of the present invention. As is shown in Figure 12B, the stress is apparently relieved resulting in a barrier layer with much better surface smoothness.

[085] A soft-metal breath treatment according to some embodiments of the present invention includes an exposure of the substrate for a short time to a soft metal vapor followed by a heat treatment. An indium-tin breath treatment, for example, involves exposure of the substrate to indium-tin from an indium-tin target in a pulsed-dc process and a subsequent heat treatment. Direct exposure to indium-tin-oxide vapor does not yield the particular beneficial results illustrated below. Without being bound by a particular theory that may be presented in this disclosure, an In/Sn breath

treatment can relieve stress in the deposited barrier layer, improving surface smoothness and MOCON WVTR performance.

[086] In a particular example of formation of barrier layer structure 1200, an embodiment of a soft-metal breath treatment was performed on a plastic substrate 1201. A breath treatment of Indium/Tin, for example, can be performed from an Indium Tin (90%/10%) Target. The process for performing the indium/tin breath treatment can be designated as 750W/0W/200 KHz/20Ar/0O2/10sec. In other words, the pulsed-dc, biased, wide target PVD process is operated with a 90% Indium/10% Tin target, an Ar flow of 20 sccms running at a constant power of 750 W in a pulsed PVD system 10 (Figure 1A) (Pulsing Frequency 200 KHz, Reverse time 2.2 μsec) for 10 secs in the AKT 1600 PVD system using the Pinnacle Plus PDC power supply. Then, the breath treatment continued and substrate 1201 was transferred into a load lock of an AKT 4300 Tool and the Tool was pumped to a base pressure of less than about $1X10^{-5}$ Torr. The substrate was then transferred to a Heat Chamber at 130 °C at $1X10^{-8}$ Torr where it is thermally treated at 130 °C for about 25 min.

[087] Substrate 1201 (with the indium/tin breath treatment described above) was then moved to a second chamber where barrier layer 1203 is deposited. Barrier layer 1203 can be formed, as indicated above, from a 92-8 Alumino-Silicate (92% Si/8% Al) target with the deposition performed at room temperature.

[088] The process parameters for the deposition of the embodiment of 92-8 barrier layer 1203 can be 3KW/200W/200KHz/85Ar/90O2/x. Therefore, the process is performed with about 3 KW PDC power, about 200 KHz Pulsing Frequency, and about 2.2 microseconds reverse time. Bias power can be held at about 200 W. A Gas

flow of about 85 sccms of Ar and about 90 sccms of O_2 was utilized. In deposition of this particular embodiment, the deposition process was power cycled where the on cycle was about 180 secs long and the off cycle was about 600 secs long for 9 cycles. The thickness of the resulting barrier layer 1203 was then about 1600 Å. In a particular test, the process described above was utilized for deposition of a barrier structure 1200 with substrate 1201 being three plastic sheets of size 6 inch by 6 inch (Dupont Teijin PEN films 200 μm thick, referred to as a PEN substrate). In general, any barrier layer (e.g., the 92-8 or TiO_2 layers discussed above) can be deposited following a soft-metal breath treatment. As discussed before, examples of processes for embodiments of barrier layers according to the present invention are presented here but wide ranges of process parameters can result in barrier layers according to the present invention.

[089] Barrier layer structure 1200 on substrate 1201 can then be tested using a variety of techniques, some of which are described below. In particular, the stress in layer 1203 can be measured using a Flexus Stress Measurement technique. Surface roughness can be measured utilizing an atomic force microscope (AFM), and water vapor transmission rates (WVTR) can be measured in a high pressure, high humidity pressure cooker device.

[090] Figure 13 illustrates a Flexus Scanning Assembly 1300 that can be utilized to test barrier layer structure 1200. In Flexus Scanning Assembly 1300, a light beam for laser 1310 is directed onto the upper surface of barrier layer 1203 by a mirror 1312. The reflected light beam from barrier layer 1203 is detected by detector 1314. Detector 1314 measures the deflection of the light beam from the beam

reflected by mirror 1312. The optical section 1316, which can include laser 1310, mirror 1312, and detector 1314, can be scanned across substrate 1201 and the angle of deflection θ, which is related to the radius of curvature of substrate 1201 as shown in relation 1318.

[091] The thin film stress in barrier 1203 can be calculated utilizing the changes in substrate deformation measured by Flexus apparatus 1300 as optical portion 1316 is scanned. As is shown in relationship 1318, the angle of the reflected beam can be monitored during the scan and the inverse of the radius of curvature R of substrate 1201 can be calculated from the derivative of the angle as a function of position in the scan.

[092] In some cases, Flexus apparatus 1300 can utilize a dual wavelength technology to increase the range of film types that the tool is capable of measuring. Each Flexus apparatus 1300, then, can have more than one laser 1310 available for scanning the wafer since different film types will reflect different wavelengths of light. Further, the reflected laser intensity provides a good indication of the quality of the measurement. In general, low light intensity at detector 1314 indicates a poor measurement condition.

[093] In Flexus apparatus 1300, stress can be determined using Stoney's equation. In particular, stress in layer 1203 can be determined by measurements of the radius of curvature before deposition of layer 1203 and the radius of curvature after deposition of layer 1203. In particular, according to Stoney's equation, the stress can be given by

$$\sigma = \frac{E_s}{(1-\nu_s)} \frac{t_s^2}{6t_f} \left(\frac{1}{R_s} - \frac{1}{R_f} \right),$$

where $E_s/(1-\nu_s)$ is the biaxial modulus of substrate 1201, σ is the stress of substrate 1201, t_s is the substrate thickness, t_f is the film thickness, R_s is the pre-deposition radius of curvature, and R_f is the post deposition radius of curvature. To obtain the best results, both measurements of the radius of curvature should be performed on the same tool to minimize systematic error in the measured radius. In addition, because the shape of a wafer is unique and because stress is calculated based on the change in deformation of the substrate, each wafer should have a baseline radius measurement. A positive radius indicates tensile stress and a negative radius indicates compressive stress. Wafer bow can be calculated, as shown in Figure 14, by measuring the maximum point of deflection from the chord connecting the end-points of a scan of Flux apparatus 1300.

[094] Measurements of stress performed on several embodiments of barrier films 1203 where barrier film 1203 is a 92-8 film as discussed above with and without a nucleation layer 1202 formed by a soft-metal breath treatment is tabulated in Table 2. As shown in Table 2, sample 1 was a 1.5 KÅ 92-8 film of actual thickness 1760 Å deposited on a Si-Wafer substrate. The resulting stress at about room temperature was -446.2 MPa. Sample 2 was a 1.5 KÅ 92-8 film of actual thickness 1670 Å over an Al-breath deposition resulted in a stress of about -460.2 MPa. In sample 3, a 1.5 KÅ 92-8 film of thickness 1860 Å was deposited subsequent to a In-breath deposition and resulted in a stress of -330.2 MPa, nearly 100 MPa lower than either of the other two depositions depicted.

1, sample 2, and sample 3 as shown in Table 1 over a temperature cycle. The temperature cycle included heating from room temperature to about 160 °C and cooling back to room temperature. In a Si-Wafer substrate, the radius of the wafer is assumed not to change with temperature. Stress data in each case was taken at the temperature indicated. As can be seen from Figure 15, 92-8 films deposited over an In-breath treatment exhibited much less stress than did either a 92-8 film deposited over an Al-breath treatment or a 92-8 film deposited over the substrate without a soft-metal breath treatment.

[096] Atomic-force microscopy (AFM) can be utilized to measure surface roughness of a film. In AFM, a miniature probe is physically scanned over the surface of a film such that the probe is in contact, and follows the surface, of the film. The probe has a small tip and therefore is capable of accurately monitoring the surface roughness for features on the order of a few nanometers.

[097] Figure 16A shows the surface roughness of a PEN substrate (Dupont Teijin PEN films 200 μm thickness), before deposition of a barrier layer according to the present invention. As is shown in Figure 16A, a PEN substrate typically has a surface roughness of average 2.2 nm, root-mean-square average RMS of 3.6 nm, and a typical maximum roughness of about 41.0 nm. As shown in Figure 16B, deposition of a 1.5 KÅ 92-8 after an indium-tin breath treatment on a PEN substrate results in an average surface roughness of 1.0 nm with RMS roughness of 1.7 nm and maximum roughness of 23.6 nm. As is shown in Figure 16C, an indium-tin-oxide (ITO) breath treatment was performed before the 1.5 K Å 92-8 barrier layer film deposition

resulted in an average roughness of 2.1 nm with RMS roughness of 3.4 nm and maximum roughness of 55.4 nm. The deposition shown in Figure 16C is performed with a 125 μm PEN substrate rather than a 200 μm PEN substrate. Therefore, a direct ITO treatment does not perform as well as treatment with an indium-tin breath. As shown in Figure 16D, deposition of a barrier layer of 1.5 K Å directly on a 125 μm PEN substrate resulted in a barrier layer with average surface roughness of about 5.2 nm with RMS roughness of 8.5 nm and maximum roughness of 76.0 nm. Therefore, although the ITO breath treatment was better than no soft-metal treatment at all with respect to surface roughness, an indium-tin breath treatment resulted in the best surface roughness yielding an average surface roughness of about 1.0 nm.

[098] Figure 17 illustrates a water vapor transmission (WVTR) testing apparatus 1700 that can be utilized to characterize barrier layer films according to embodiments of the present invention. A sample 1701 can be mounted into apparatus 1700 in such a way that the surface of substrate 1201 (Figure 12) is isolated from the surface of barrier layer 1203 (Figure 12). A moisture-free gas is input to port 1702, contacts one surface of sample 1701, and is directed to sensor 1703 where the water vapor coming from sample 1701 is monitored. A humid gas is directed to the opposite side of sample 1701 through port 1705. An RH probe 1704 can be utilized to monitor the water content of the gas input to port 1705. Sensor 1703, then, monitors the water vapor that is transmitted through sample 1701.

[099] Such tests are performed by Mocon Testing Service, 7500 Boone Avenue North, Minneapolis, MN 55428. In addition, the Mocon testing is pereformed in accordance with ASTM F1249 standards. Typically, instruments

utilized for WVTR testing by Mocon can detect transmission in the range 0.00006gm/100in^2/day to 4gm/100in^2/day. The Mocon 3/31 instrument, for example, has a lower detection limit of about 0.0003gm/100in^2/day.

[0100] A barrier layer deposition formed with an Al-breath treatment followed by a 1.5 K Å 92-8 barrier layer deposition on a 200 μm PEN substrate resulted in a Mocon test WVTR of 0.0631 gm/100in^2/day. A barrier layer deposition formed with an In-breath treatment followed by a 1.5 K Å 92-8 on 200 μm PEN substrate resulting in no measurable WVTR in the Mocon 3/31 instrument (i.e., the transmission rate was less than 0.0003 gm/100in^2/day).

[0101] As was further discussed above, Figures 16A through D illustrates the role that a soft-metal breath treatment (in particular an indium breath treatment) can play in determining the surface roughness of a deposited barrier layer according to the present invention. The surface roughness of a barrier layer can also affect the WVTR characteristics of a barrier layer. Smoother barrier layer result in better WVTR performance. As such, Figure 16A shows a bare 200 μm PEN substrate with no barrier. Figure 16B shows a 200 μm PEN substrate with a 1500 Å thickness 92-8 barrier layer deposited after a In/Sn breath treatment according to the present invention. Figure 16C illustrates a 200 μm PEN substrate with a 1500 Å 92-8 barrier layer deposited after treatment with ITO breath. Figure 16D is a 200 μm PEN substrate with a 1500 Å 92-8 barrier layer directly deposited on the substrate. As can be seen, the structure of Figure 16B shows the best surface smoothness characteristics.

[0102] Table 3 illustrates several examples of barrier layers, with surface smoothness characteristics and MOCON WVTR testing results. In Table 3, the samples described in rows 1-4 are 92-8 layers (as described above) of thickness about 2000 Å deposited on one or both sides of a 700 μm thick polycarbonate (LEXAN produced by General Electric, corp.). The data shows that the double-side coated barrier layer structure (rows 1 and 2) perform about an order of magnitude better in MOCON WVTR test than does the one sided structures (rows 3 and 4).

[0103] Rows 5 through 8 illustrate various deposition on a PEN substrate (with rows 5-6 describing deposition on a 200 μm PEN substrate and rows 7 and 8 describing depositions on a 125 μm PEN substrate). The In breath treatment parameters refer to In/Sn breath treatments as discussed above. The AFM parameters are shown in Figures 16B through 16D as described earlier. As discussed before, the best surface smoothness and the best WVTR characteristics are shown in row 6, with In breath treatment followed by deposition of a 92-8 layer. The data in row 9 indicates an In breath treatment (In/Sn) with higher power on a thinner (125 μm) PEN substrate. Presumably, the thermal stress behavior on a 125 μm PEN substrate is worse than that for a 200 μm PEN substrate. Further indication of this effect is shown in the data of rows 30 through 33 along with Figures 19A and 19B. The data in rows 30 and 31 include a indium/tin breath treatment (at 750W) on a 200 μm PEN substrate followed by about 1.5 kÅ 92-8 layer deposition, which yields a very smooth surface (e.g., about 1.1nm average) as shown in Figure 19A and an undetectable MOCON WVTR characteristic on the MOCON 3/31 test equipment. The data in rows 32 and 33, with In/Sn breath treatment followed by 1.5 kÅ 92-8 layer deposition

on 125 μm PEN substrate, shows worse smoothness (about 2.0 nm average roughness) and a WVTR test in the MOCON apparatus of about 1.7×10^{-2} $gm/m^2/day$. The 92-8 depositions illustrated in rows 30 through 33 were concurrently performed in a single operation.

[0104] The data in rows 12 and 13 of Table 3 indicate an In-breath treatment plus 1.5 kÅ TiO_2 deposition on a 125 μm PEN substrate. Data in rows 10 and 11 indicate an In/Sn-breath treatment plus 1.5 kÅ 92-8 deposition on a 125 μm PEN substrate. As can be seen in Table 3, the WVTR characteristics of 92-8 layers is more than an order of magnitude better than the WVTR characteristics of TiO_2 layers. Representative smoothness for rows 12 and 13 are presented in Figure 22A and representative smoothness for rows 10 and 11 are presented in Figure 22B. As is shown in Table 3, the average smoothness for 92-8 layers is approximately an order of magnitude better than the average smoothness for TiO_2.

[0105] The data in rows 14 and 15 of Table 3 illustrate an In/Sn breath treatment on a 125 μm LEXAN substrate followed by a 92-8 layer deposition. The data in rows 14 and 15 can be compared with the data in rows 32 and 33, which are In/Sn breath treatment on a 125 μm PEN substrate followed by a 1.5 KÅ 92-8 layer deposition. The smoothness is comparable between the LEXAN and PEN substrate, although as can be seen in a comparison of Figures 21A and 21B, the morphology is different, i.e. barrier layers according to the present invention deposited on the LEXAN substrate show more granularity than barrier layers deposited on the PEN substrate.

[0106] The data in rows 16 through 18 of Table 3 illustrate different process parameters for an In/Sn breath treatment followed by 1.5 KÅ 92-8 deposition on a 200 μm PEN substrate. The data in row 16 illustrates a setting where the current is set rather than power. The data in row 16 is taken with a current of 6.15 amps. In the barrier layer illustrated in row 17, the In/Sn breath treatment is performed at 1.5 kW of operating power. In the barrier layer illustrated in row 18, the In/Sn breath treatment is performed at 750 W of operating power. In each case, the MOCON WVTR characteristic of the resulting barrier layer is below detectability on the MOCON 3/31 instrument.

[0107] The data in rows 19-29 of Table 3 illustrate different In/Sn breath treatments and their effects on the surface smoothness of the resulting barrier layers and on the MOCON WVTR characteristics. The data in rows 19-22 are all examples of where the In/Sn breath treatment is replaced with a evaporated In layer followed by a 130 C preheat treatment. The surface roughness characteristics are illustrated in Figure 18A and shows an average roughness of about 1.1 nm. However, the morphology is very granular as is shown in Figure 18A, with presumably a lot of porosity, resulting in MOCON WVTR test on the order of .8 gm/m^2/day. The data shown in row 23 of Table 3 illustrates the case where no In/Sn breath treatment is utilized and the 200 μm PEN substrate is preheated before deposition of a 1.5 kÅ 92-8 deposition, which as shown in Figure 18C has a surface roughness of about 5.2 nm average and a MOCON WVTR of about 0.8 gm/m^2/day, or the same as is shown with the indium evaporation vapor data shown in rows 19-22. Therefore, the same characteristics result whether an indium evaporation vapor treatment is applied or not.

[0108] Rows 24-29 of Table 3 illustrate data where an In/Sn breath treatment was performed at 280 °C rather than at room temperature. The surface roughness, as is illustrated in Figure 18B, was about 1.1 nm average. However, the MOCON WVTR data was about 3 X 10^{-2} gm/m^2/day. This value is much higher than that shown in the similar depositions of rows 30 and 31, which were below 5 X 10^{-3} gm/m^2/day detectability limits of the MOCON 3/31 instrument.

[0109] The data in rows 34 and 35 illustrates deposition of a 1.5 kÅ 35-65 layer (i.e., a deposition with a target having 35% Si and 65 % Al) following a In/Sn deposition on a 200 μm PEN substrate. As is illustrated, the MOCON WVTR are 1.4 X 10^{-1} gm/m^2/day, which shows the possible necessity of a biased process for producing barrier layers according to the present invention.

[0110] Figure 20 illustrates a barrier layer 2002 that can also operate as a thin film gate oxide deposited on a substrate 2001. A thin film gate oxide 2002 can be deposited as a barrier layer according to the present invention. Such a layer as the benefit of protecting moisture and oxygen sensitive transistor layer compounds of germanium, tin oxide, zinc oxide, or pentacene, for example, while functioning as the thin oxide electrical layer. Substrate 2001 can include any electrical device that can be formed on, for example, a silicon wafer, plastic sheet, glass plate, or other material. Barrier layer 2002 can be a thin layer, for example from 25 to 500 Å.

[0111] Titanium oxide is well known as the preferred material for biological implantation due to the lack of immunological response to titanium oxide. In addition, it is preferred that a thin film of TiO_2, which is an immunologically indifferent barrier layer, can simultaneously protect a device such as a voltage or

charge sensor or an optical device such as a waveguide while performing the role of coupling the device capacitively or optically due to its' high dielectric constant or its' high optical index.

[0112] An array of capacitors can be coupled by the high capacitive density due to the proximity of the sensor provided by a very thin high-k dielectric such as TiO_2. In practice, a micron or sub micron array can be used to monitor the electrical activity, amplitude, and direction of very low electrical signals such as those that accompany the propagation of electrical signals in single axion of single neural ganglia. Conversely, it can also be used to electrically couple stimulus to adjacent cells or tissue. High resolution, high-capacitance coupling to the optic nerve, the auditory nerve, or neural tissue on the order of 5 to 50 femto-farads/μm^2 is made uniquely feasible by such a capacitive barrier film without immunological reaction.

[0113] Other embodiments of the invention will be apparent to those skilled in the art from consideration of the specification and practice of the invention disclosed herein. This disclosure is not limited by any theories or hypothesis of operation that are utilized to explain any results presented. It is intended that the specification and examples be considered as exemplary only, with a true scope and spirit of the invention being indicated by the following claims. As such, this application is limited only by the following claims.

TABLE 1

Stack #	Substrates	Stack layer composition	TiO2 Deposition Process	Measured Thickness TiO2 (Å)	Silica/alumina (92-8) Deposition Process	Measured Thickness Silica/Alumina (92-8) (Å)
1	6 Microscope slides + 1 6inch wfr	TiO2/92-8/ TiO2/92-8/ TiO2	7KW/200W/200KHz/60Ar /90O2/950s	580	3KW/200W/200KHz/85Ar /90O2/1005	980
2	6 Microscope slides + 1 6inch wfr	TiO2/92-8/ TiO2/92-8/ TiO2	7KW/200W/200KHz/60Ar /90O2/835s	510	3KW/200W/200KHz/85Ar /90O2/1006	910
3	2 Sodalime Glass + 4 Microscope Slides	TiO2/92-8/ TiO2/92-8/ TiO2	7KW/200W/200KHz/60Ar /90O2/901s	550	3KW/200W/200KHz/85Ar /90O2/1025	1000
4	2 Sodalime Glass + 4 Microscope Slides	TiO2/92-8/ TiO2/92-8/ TiO2	7KW/200W/200KHz/60Ar /90O2/901s	550	3KW/200W/200KHz/85Ar /90O2/1025	1000
5	4 Microscope Slides	TiO2/92-8/ TiO2/92-8	7KW/200W/200KHz/60Ar /90O2/901s	550	3KW/200W/200KHz/85Ar /90O2/1025	1000
6	3 Sodalime Glass + 4 Microscope Slides	TiO2/92-8/ TiO2/92-8/ TiO2	7KW/200W/200KHz/60Ar /90O2/901s	550	3KW/200W/200KHz/85Ar /90O2/1025	1000

TABLE 2

Id	Comment	Temp °C	Radius (m)	Stress Mpa	Film Thickness (Å)	Bow (µm)
Sample 1	pre-deposition	21	-4.76E+03	N/A	N/A	1.58
	1.5 KÅ 92-8 film deposition/ no In-breath treatment	27	-145.978	-446.2	1760	11.74
Sample 2	pre-deposition	29	-4.10E+03	N/A	N/A	1.38
	Al breath deposition then 1.5 KÅ 92-8 film treatment	36	-169.482	-460.2	1670	10.18
Sample 3	pre-deposition	25	-230.249	N/A	N/A	4.36
	In breath treatment then 1.5 KÅ 92-8 film deposition	25	-67.169	-330.2	1860	10.25

TABLE 3

Sample ID	Sample Description	Substrate Material	Thickness µm	MOCON WVTR (g/100inch2/day)	MOCON WVTR (g/m2/day)	AFM Results
1 (Film (coated on both sides) - A)	2 KÅ 92-8 on Polycarbonate, deposited on both sides-A	LEXAN	700	7.2000E-04	1.1160E-02	
2 (Film (coated on both sides) - B)	2 KÅ 92-8 on Polycarbonate, deposited on both sides-B	LEXAN	700	5.8000E-04	8.9900E-03	
3 (Film (coated on one side) - A)	2 KÅ 92-8 on Polycarbonate - A	LEXAN	700	8.3000E-03	1.2865E-01	
4 (Film (coated on one side) - B)	2 KÅ 928 on Polycarbonate - B	LEXAN	700	1.7200E-02	2.6660E-01	
5 (Al+1.5K928)	Al -breath (500W 10sec+ 130c heat treatment) + 1.5 KÅ 92-8 on PEN	PEN Q65	200	6.3100E-02	9.7805E-01	

6 (InB + 1.5K928)	In Breath (750W 5sec+ 130c heat treatment) + 1.5 KÅ 92-8 on PEN	PEN Q65	200	3.0000E-04	4.6500E-03	Ra=1.3nm RMS=1.5nm Rmax=9.8nm *See* Figure 16B
7 (102-MOCON ID: 1619-003)	NO In Breath + 130c Preheat + 1.5 KÅ 92-8 on PEN	PEN Q65	125	4.0200E-02	6.2310E-01	Ra=5.2nm RMS=8.5nm Rmax=76.0nm *See* Figure 16D
8 (103-MOCON ID: 1619-002)	ITO breath + 130c Preheat + 1.5 KÅ 92-8 on PEN	PEN Q65	125	2.4900E-02	3.8595E-01	Ra=2.1nm RMS=3.4nm Rmax=55.5nm *See* Figure 16C
9 (104-MOCON ID: 1619-001)	In Breath (1.5KW + 130c Preheat) + 1.5 KÅ 92-8 on PEN	PEN Q65	125	2.5900E-02	4.0145E-01	
10 (PEN-A)	In Breath+92-8 on PEN	PEN Q65	125	1.8323E-03	2.8400E-02	Ra=3.4nm, RMS=4.2nm Rmax=29.4nm *See* Figure 22B
11 (PEN-B)	In Breath+92-8 on PEN	PEN Q65	125	2.3871E-03	3.7000E-02	Ra=3.4nm RMS=4.2nm Rmax=29.4nm *See* Figure 22B

12 (PEN2-A)	In Breath+TiO2 on PEN	PEN Q65	125	1.0065E-01	1.56	Ra=7.7nm RMS=9.7nm Rmax=72.4nm *See* Figure 22A
13 (PEN2-B)	In Breath+TiO2 on PEN	PEN Q65	125	8.9032E-02	1.38	Ra=7.7nm RMS=9.7nm Rmax=72.4nm *See* Figure 22A
14 (LEXAN-A)	InB+92-8 on LEXAN	LEXAN	125	1.4194E-02	2.2000E-01	Ra=0.9nm RMS=1.1nm Rmax=9.5nm *See* Figure 21A
15 (LEXAN-B)	In Breath+92-8 on LEXAN	LEXAN	125	2.8387E-03	4.4000E-02	Ra=0.9nm RMS=1.1nm Rmax=9.5nm *See* Figure 21A
16 (6.15A)	In Breath (6.15A 5sec+ 130 °C heat) + 1.5 KÅ 92-8 on PEN	PEN Q65 Lot#1	200	Below Detection	Below Detection	
17 (1.5KW)	In Breath (1.5KW 5sec+ 130 °C heat) + 1.5 KÅ 92-8 on PEN	PEN Q65 Lot#1	200	Below Detection	Below Detection	

18 (750W)	In Breath (750W 5sec+ 130 °C heat) + 1.5 KÅ 92-8 on PEN	PEN Q65 Lot#1	200	Below Detection	Below Detection	
19 (.037-A)	In Breath from Evap 0.037 + 130 °C Preheat + 1.5 KÅ 92-8 on PEN	PEN Q65 Lot#1	200	5.1097E-02	7.9200E-01	Ra=1.1nm RMS=1.4nm Rmax=9.4nm *See* Figure 18A
20 (.037-B)	In Breath from Evap 0.037 + 130 °C Preheat + 1.5 KÅ 92-8 on PEN	PEN Q65 Lot#1	200	3.9935E-02	6.1900E-01	Ra=1.1nm RMS=1.4nm Rmax=9.4nm *See* Figure 18A
21 (.113-A)	In Breath from Evap 0.113 + 130 °C Preheat + 1.5 KÅ 92-8 on PEN	PEN Q65 Lot#1	200	5.6323E-02	8.7300E-01	Ra=1.1nm RMS=1.4nm Rmax=9.4nm *See* Figure 18A
22 (.113-B)	In Breath from Evap 0.113 + 130 °C Preheat + 1.5 KÅ 92-8 on PEN	PEN Q65 Lot#1	200	4.1097E-02	6.3700E-01	Ra=1.1nm RMS=1.4nm Rmax=9.4nm *See* Figure 18A
23 (MON-A)	NO In Breath + 130 °C heat + 1.5 KÅ 92-8 on PEN	PEN Q65 Lot#1	200	4.9806E-02	7.7200E-01	Ra=5.2nm RMS=8.5nm Rmax=76.0nm *See* Figure 18C

24 (12-17-03-01-A)	In Breath @280c+ 130 °C heat + 1.5 KÅ 92-8 on PEN	PEN Q65 Lot#1	200	7.8710E-04	1.2200E-02	Ra=1.1nm, RMS=1.4nm Rmax=9.4nm *See* Figure 18B
25 (12-17-03-01-B)	In Breath @280c+ 130 °C heat + 1.5 KÅ 92-8 on PEN	PEN Q65 Lot#1	200	1.1484E-03	1.7800E-02	Ra=1.1nm RMS=1.4nm Rmax=9.4nm *See* Figure 18B
26 (12-17-03-03-A)	In Breath @280c+ 130 °C heat + 1.5 KÅ 92-8 on PEN	PEN Q65 Lot#1	200	1.9548E-03	3.0300E-02	Ra=1.1nm RMS=1.4nm Rmax=9.4nm *See* Figure 18B
27 (12-17-03-03-B)	In Breath @280c+ 130 °C heat + 1.5 KÅ 92-8 on PEN	PEN Q65 Lot#1	200	1.1935E-03	1.8500E-02	Ra=1.1nm RMS=1.4nm Rmax=9.4nm *See* Figure 18B
28 (12-17-03-02_A)	In Breath @280c+ 130 °C heat + 1.5 KÅ 92-8 on PEN	PEN Q65 Lot#1	200	2.2065E-03	3.4200E-02	Ra=1.1nm RMS=1.4nm Rmax=9.4nm *See* Figure 18B
29 (12-17-03-02_B)	In Breath @280c+ 130 °C heat + 1.5 KÅ 92-8 on Pen	PEN Q65 Lot#1	200	2.7677E-03	4.2900E-02	Ra=1.1nm RMS=1.4nm Rmax=9.4nm *See* Figure 18B

30 (165-A)	InB 750W 5sec+4300 130c Preheat + 1.5KA 92-8 on PEN	PEN Q65 Lot#2	200	Below Detection	Below Detection	Ra=1.1nm RMS=1.4nm Rmax=9.4nm *See* Figures19A and 18D
31 (165-B)	In Breath (750W 5sec+130 °C heat) + 1.5 KÅ 92-8 on PEN	PEN Q65 Lot#2	200	Below Detection	Below Detection	Ra=1.1nm RMS=1.4nm Rmax=9.4nm *See* Figures 19A and 18D
32 (167-A)	In Breath (750W 5sec+ 130 °C heat) + 1.5 KÅ 92-8 on PEN	PEN Q65 Lot#2	125	9.0323E-04	1.4000E-02	Ra=2.0nm RMS=2.6nm Rmax=18.0nm *See* Figures 19B and 21B
33 (167-B)	In Breath (750W 5sec+ 130 °C heat) + 1.5 KÅ 92-8 on PEN	PEN Q65 Lot#2	125	1.4194E-03	2.2000E-02	Ra=2.0nm RMS=2.6nm Rmax=18.0nm *See* Figures 19B and 21B
34 (170-A)	In Breath (750W 5sec+130 °C heat) + 1.5 KÅ 35-65 (no bias) on PEN	PEN Q65 Lot#2	125	8.7742E-03	1.3600E-01	
35 (170-B)	In Breath (750W 5sec+130 °C heat) + 1.5 KÅ 35-65 (no Bias) on PEN	PEN Q65 Lot#2	125	2.6258E-02	4.0700E-01	

TABLE 4

	Hv [Vickers]	H [MPa]	E [GPa]	□ d [□m]
MN-Al2O3 5mN	1 836	19 814	211.49	0.129
MN-Al2O3 2.5mN	2 087	22 520	230.51	0.084
Y10822-1 5 mN	753	8 123	104.03	0.194
808-0Y10822-1 2.5 mN	834	8 996	104.29	0.130

WHAT IS CLAIMED IS:

1. A dielectric layer, comprising:

a densified amorphous dielectric layer deposited on a substrate by pulsed-DC, substrate biased physical vapor deposition,

wherein the densified amorphous dielectric layer is a barrier layer.

2. The layer of claim 1, wherein the deposition is performed with a wide area target.

3. The layer of claim 1, wherein the barrier layer is also an optical layer.

4. The layer of claim 3, wherein the barrier layer includes a TiO_2 layer.

5. The layer of claim 3, wherein the barrier layer includes an Alumina/Silica layer.

6. The layer of claim 3, further including a soft-metal breath treatment.

7. The layer of claim 6, wherein the soft-metal breath treatment is an indium-tin vapor treatment.

8. The layer of claim 1, wherein the barrier layer is also an electrical layer.

9. The layer of claim 8, wherein the barrier layer includes a capacitive layer.

10. The layer of claim 9, wherein the capacitive layer is a TiO_2 layer.

11. The layer of claim 9, wherein the capacitive layer is an Alumina/silica layer.

12. The layer of claim 8, wherein the barrier layer includes a resistive layer.

13. The layer of claim 12, wherein the resistive layer is indium-tin metal or oxide.

14 The layer of claim 8, further including a soft-metal breath treatment.

15. The layer of claim 14, wherein the soft-metal breath treatment is an indium-tin vapor treatment.

16. The layer of claim 1, wherein the barrier layer includes a tribological layer.

17. The layer of claim 16, wherein the tribological layer is a TiO_2 layer.

18. The layer of claim 16, wherein the tribological layer is Alumina/silica.

19. The layer of claim 16, further including a soft-metal breath treatment.

20. The layer of claim 19, wherein the soft-metal breath treatment is an indium-tin vapor treatment.

21. The layer of claim 1, wherein the barrier layer is a biologically immune compatible layer.

22. The layer of claim 1, wherein the biologically immune compatible layer is TiO_2.

23. The layer of claim 21, further including a soft-metal breath treatment.

24. The layer of claim 23 wherein the soft-metal breath treatment is an indium-tin vapor treatment.

25. The layer of claim 1, wherein the dielectric film is TiO_2.

26. The layer of claim 1, wherein a target utilized to form the dielectric film has a concentration of 92% Al and 8% Si.

27. The layer of claim 1, wherein the target utilized to form the dielectric film is formed from metallic magnesium.

28 The layer of claim 1, wherein the target material comprises materials chosen from a group consisting of Mg, Ta, Ti, Al, Y, Zr, Si, Hf, Ba, Sr, Nb, and combinations thereof.

29 The layer of claim 28, wherein the target material includes a concentration of rare earth metal.

30 The layer of claim 1, wherein the target material comprises a sub-oxide of a group consisting of Mg, Ta, Ti, Al, Y, Zr, Si, Hf, Ba, Sr, Nb, and combinations thereof.

31. The layer of claim 1, further including a soft-metal breath treatment.

32. The layer of claim 31, wherein the soft-metal breath treatment is an indium-tin vapor treatment.

33. The layer of claim 1, wherein the dielectric film has a permeable defect concentration of less than about 1 per square centimeter.

34. The layer of claim 1, wherein the water vapor transmission rate is less than about 1×10^{-2} gm/m^2/day.

35. The layer of claim 1, wherein the optical attenuation is less than about 0.1 dB/cm in a continuous film.

36. The layer of claim 1, wherein the barrier layer has a thickness less than about 500 nm.

37. The layer of claim 36, wherein the water vapor transmission rate is less than about 1×10^{-2} gm/m^2/day.

38. The layer of claim 1, wherein the barrier layer thickness is less than about 1 micron and the water vapor transmission rate is less than about 1×10^{-2} gm/m^2/day.

39. The layer of claim 1, wherein the barrier layer operates as a gate oxide for a thin film transistor.

40. A method of forming a barrier layer, comprising:

providing a substrate;

depositing a highly densified, amorphous, dielectric material over the substrate in a pulsed-DC, biased, wide target physical vapor deposition process.

41. The method of claim 40, further including

performing a soft-metal breath treatment on the substrate.

42. The method of claim 40, wherein the dielectric material is formed from a target comprising 92% Al and 8% Si.

43. The method of claim 40, wherein the dielectric material is formed from a target comprising of Titanium.

44. The method of claim 40, wherein the dielectric material is formed from a target material comprising materials chosen from a group consisting of Mg, Ta, Ti, Al, Y, Zr, Si, Hf, Ba, Sr, Nb, and combinations thereof.

45. The method of claim 41, wherein the soft-metal breath treatment is an indium/tin breath treatment.

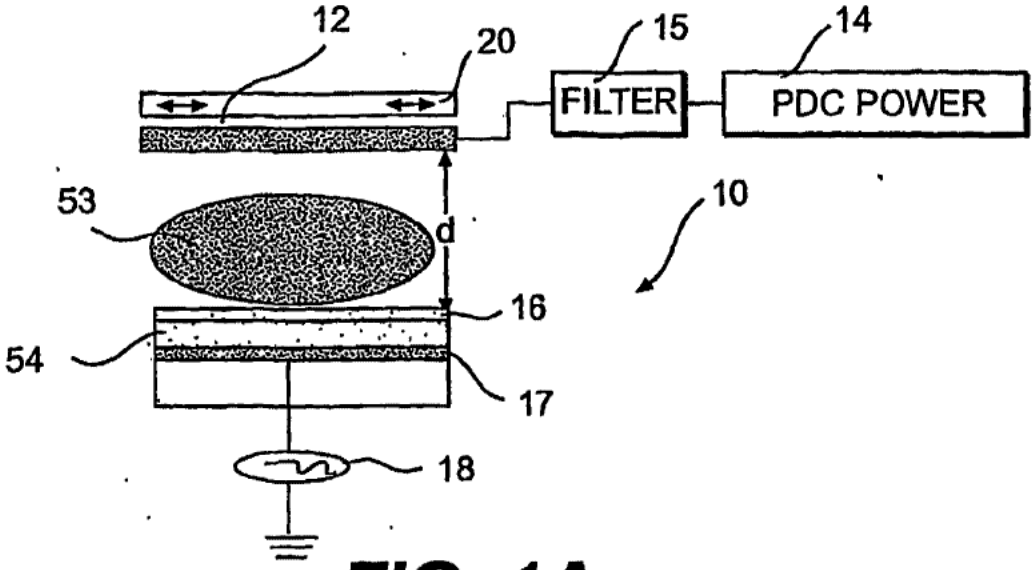

FIG. 1A

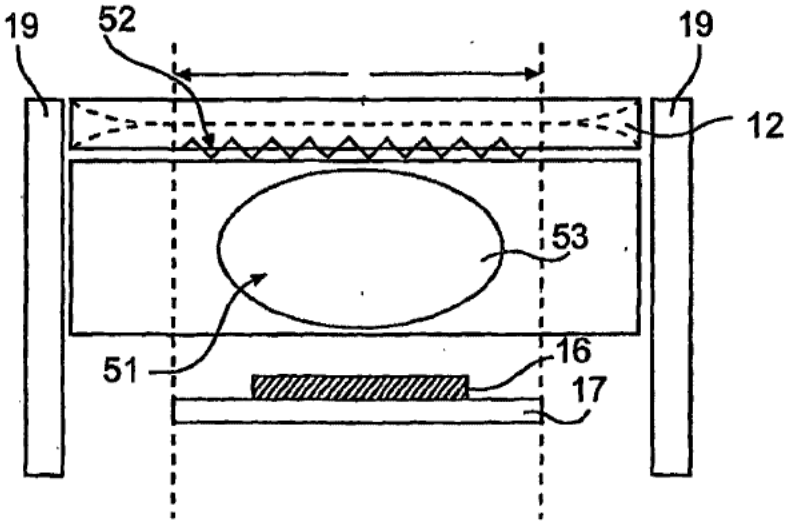

FIG. 1B

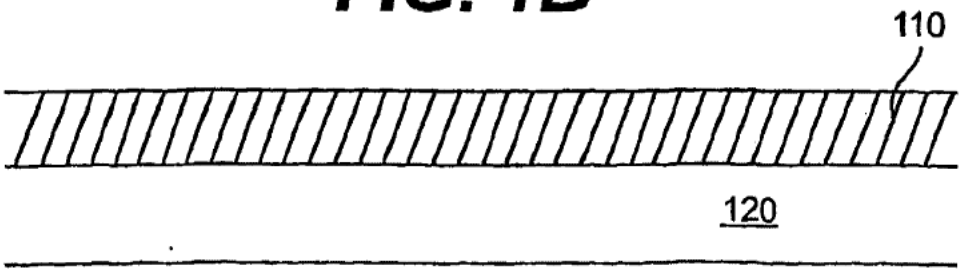

FIG. 1C

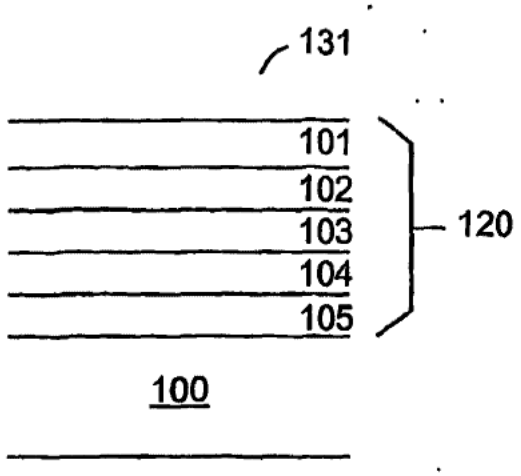

FIG. 2A

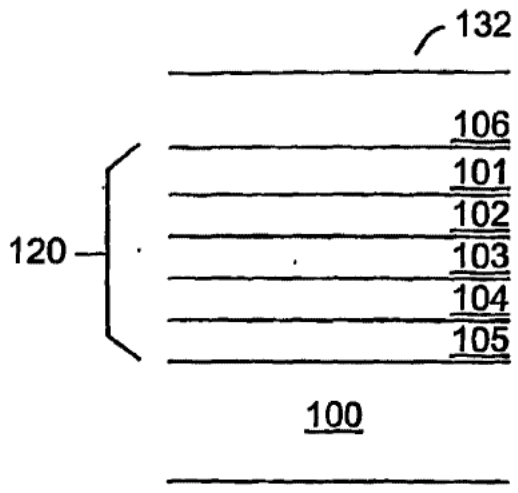

FIG. 2B

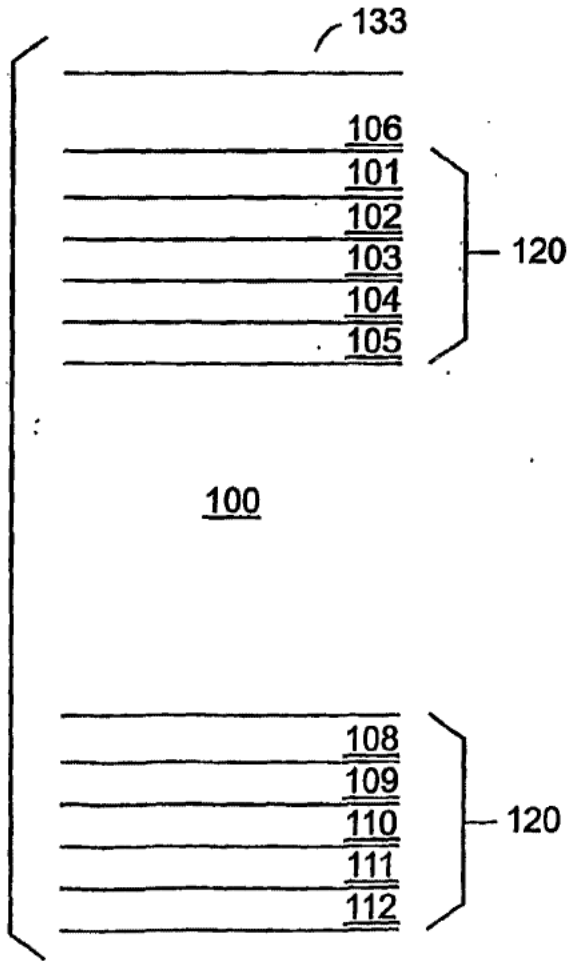

FIG. 2C

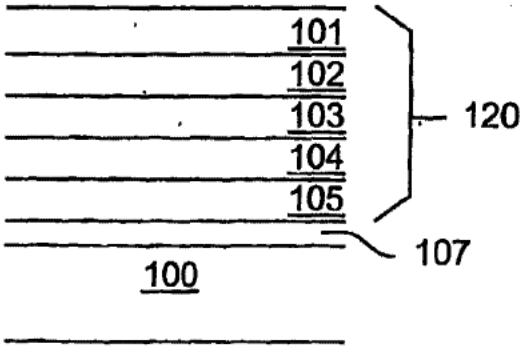

FIG. 2D

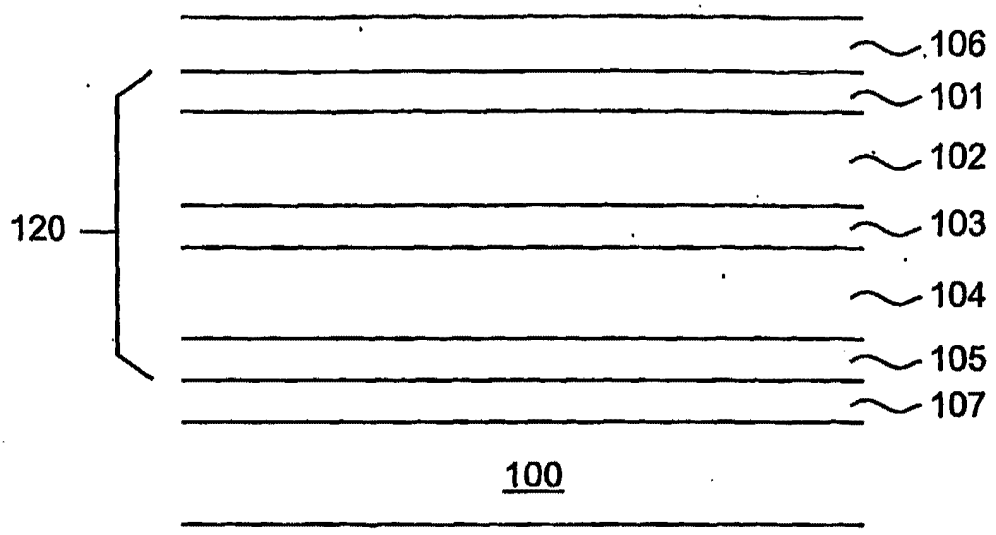
106
101
102
120
103
104
105
107
100

FIG. 2E

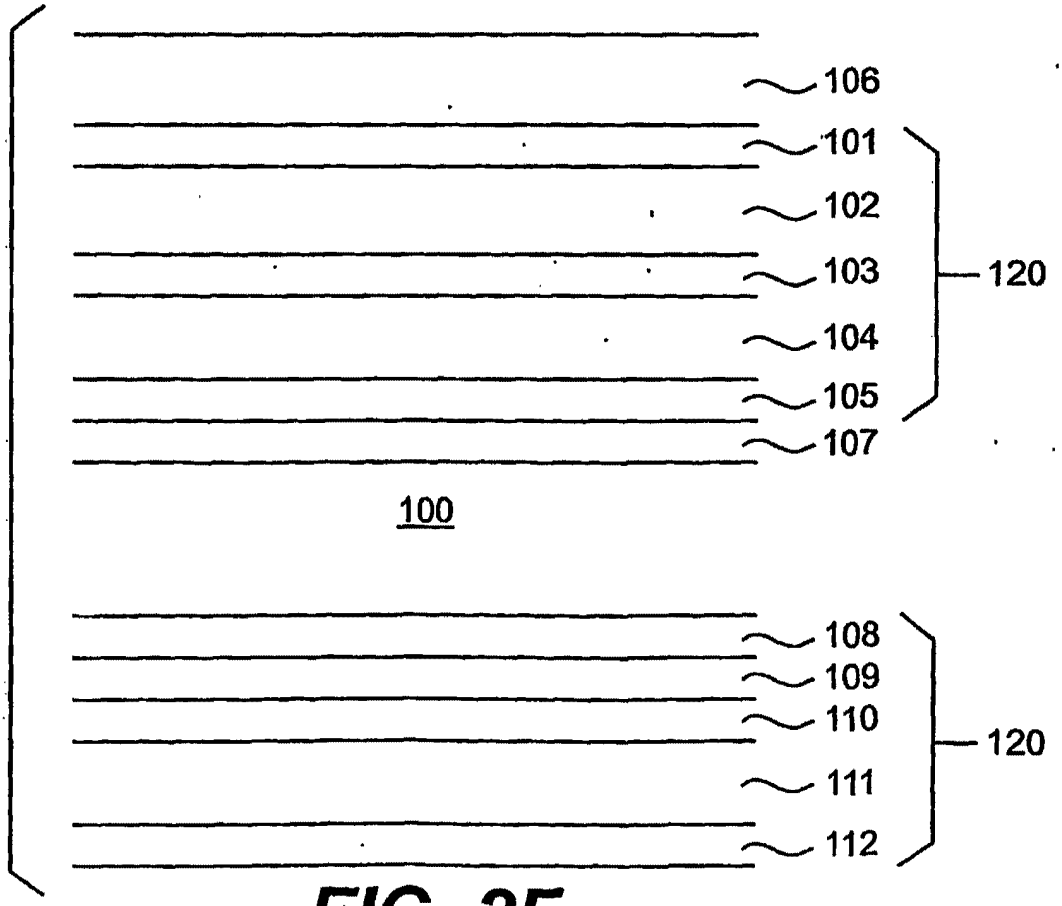
106
101
102
103
120
104
105
107
100
108
109
110
120
111
112

FIG. 2F

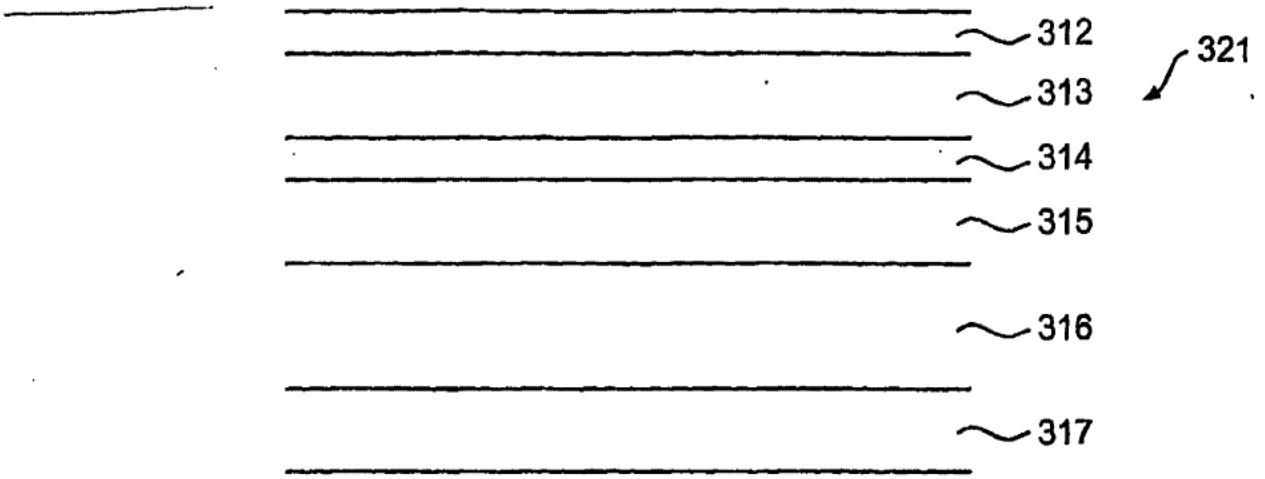

FIG. 3

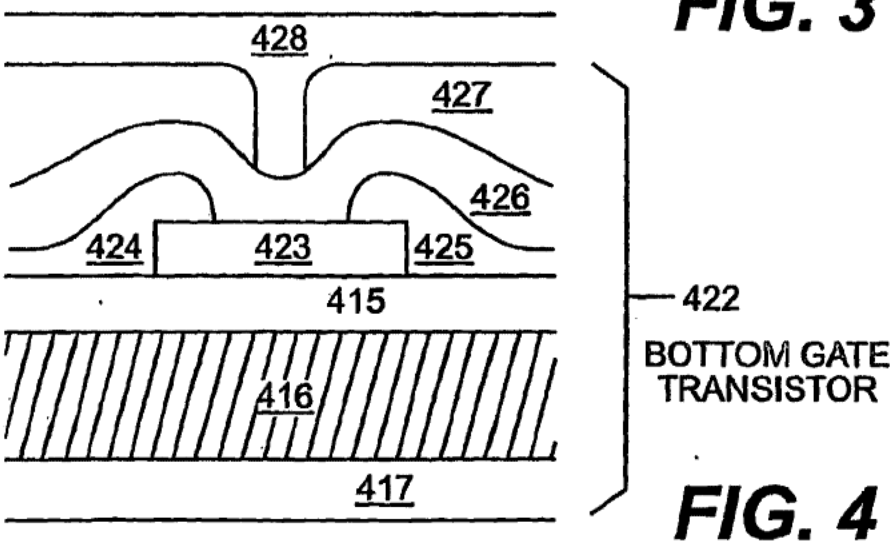

FIG. 4

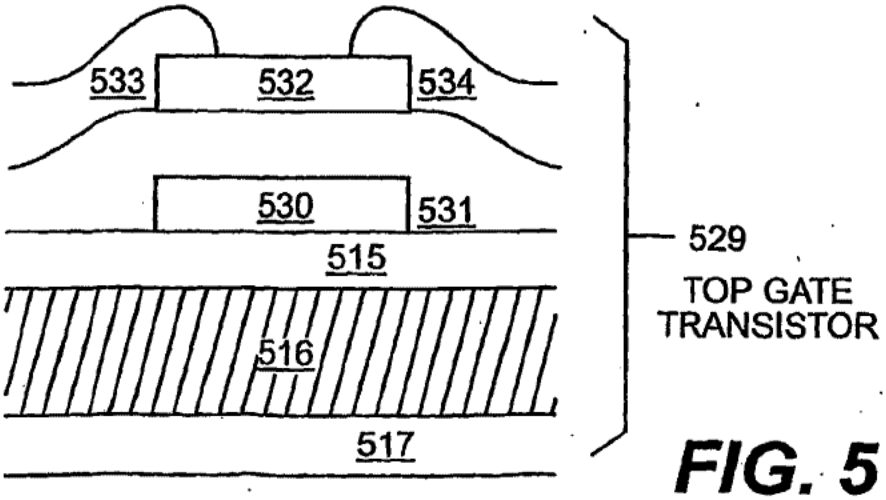

FIG. 5

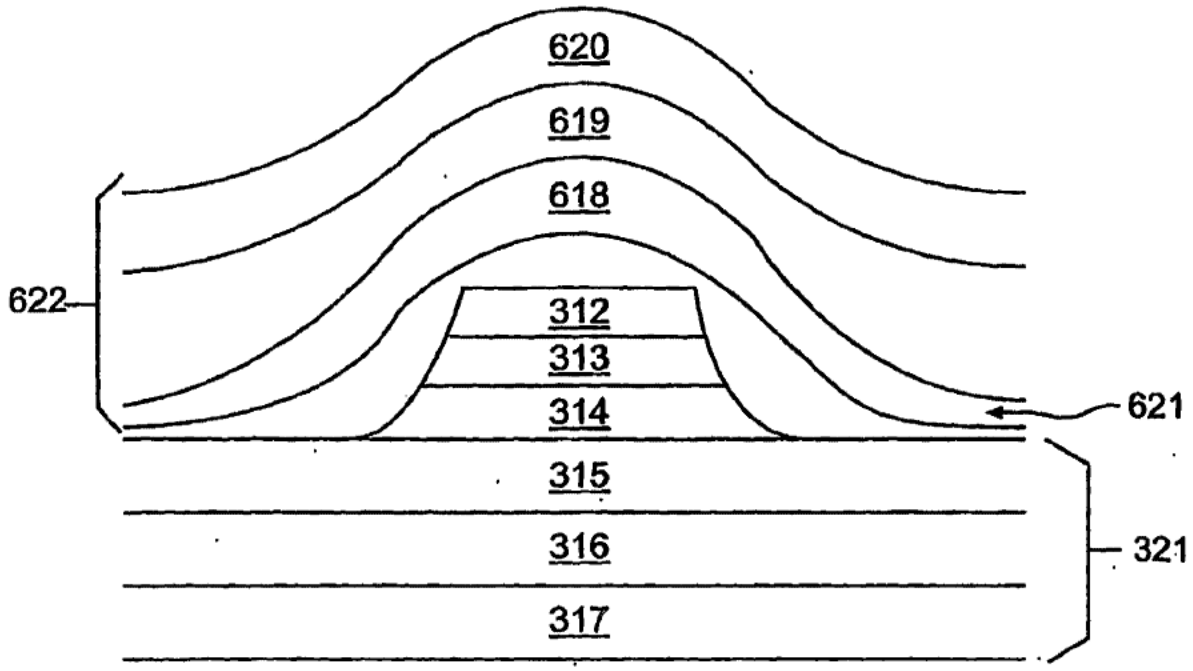
620
619
618
622
312
313
314
621
315
316
321
317

FIG. 6

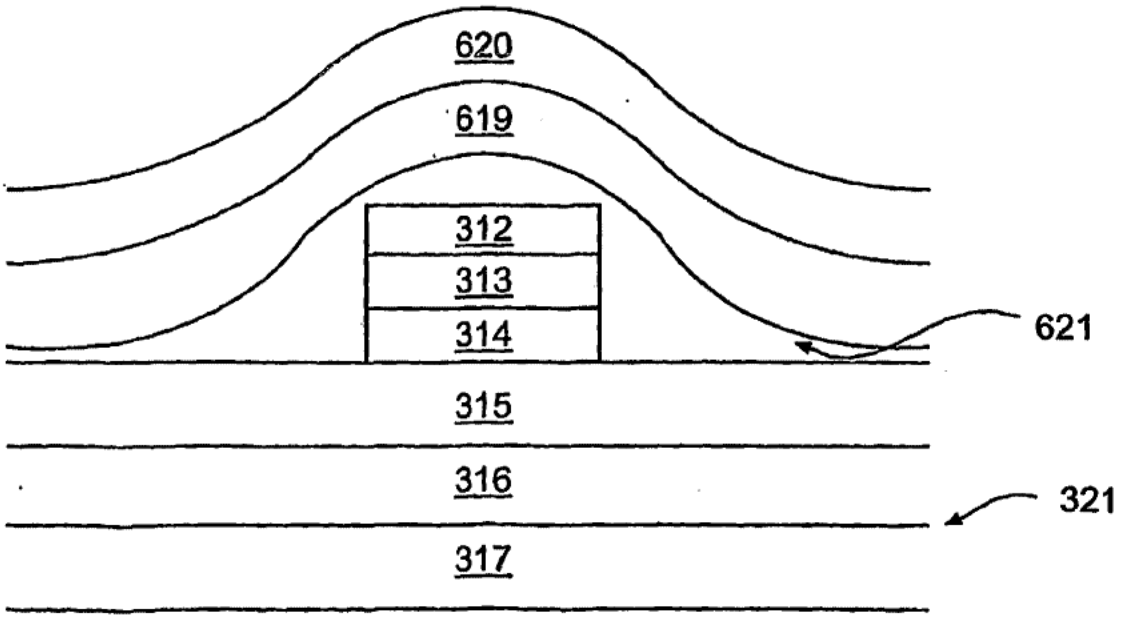
620
619
312
313
314
621
315
316
321
317

FIG. 7

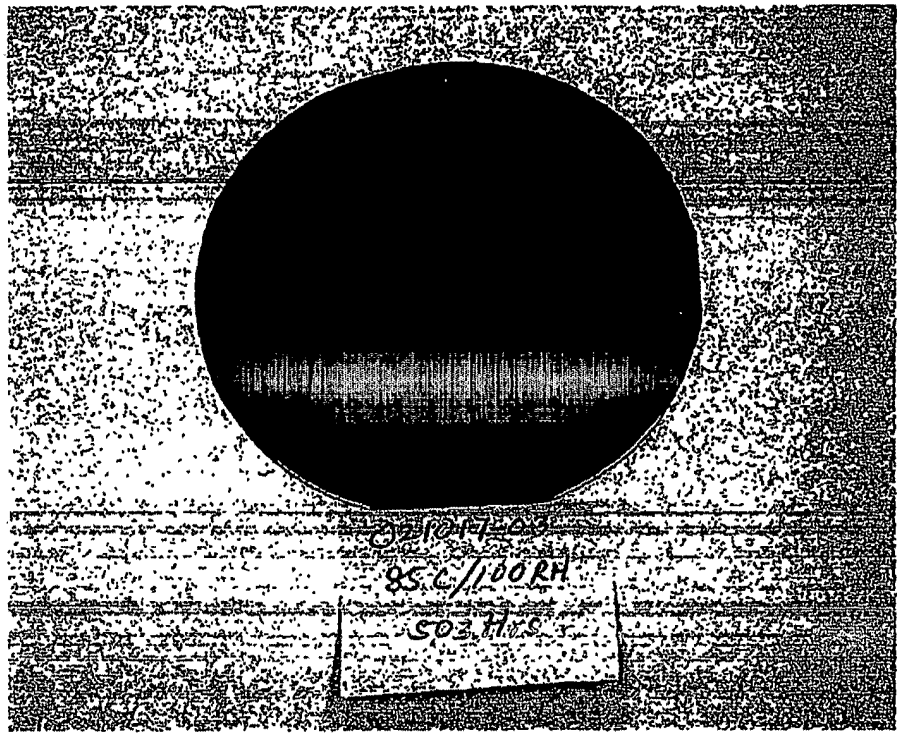

FIG. 8

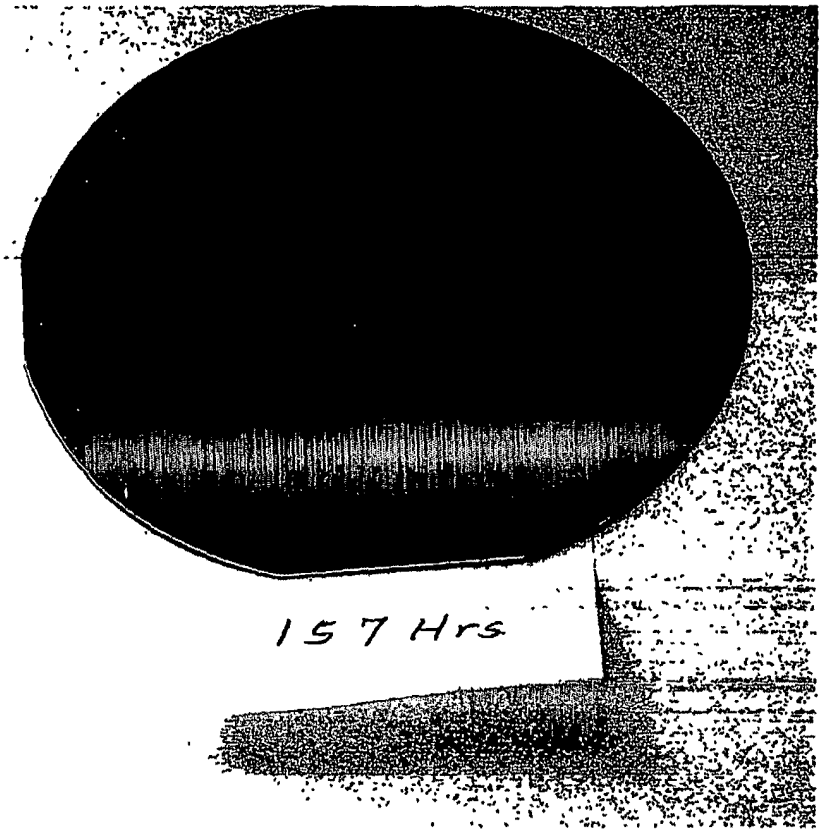

FIG. 9

FIG. 10

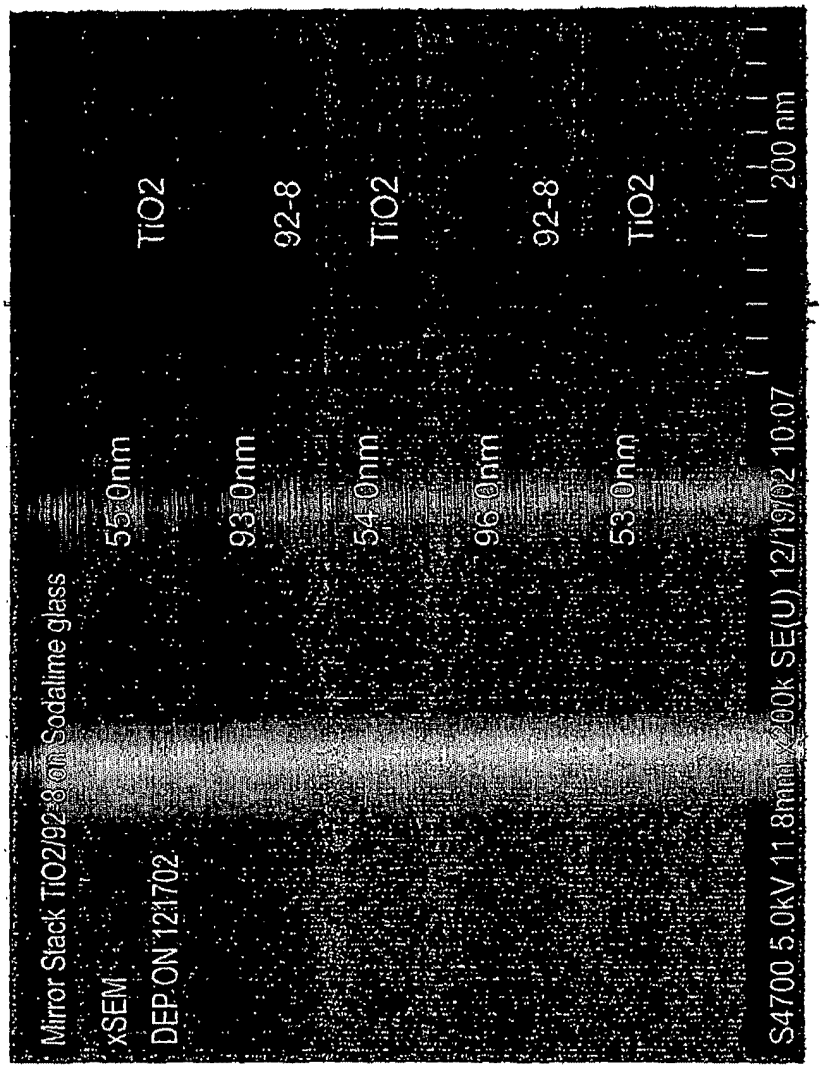
Mirror Stack TiO2/92-8 on Sodaline glass
xSEM
DEP ON 121702
55.0nm
TiO2
93.0nm
92-8
54.0nm
TiO2
96.0nm
92-8
53.0nm
TiO2
S4700 5.0kV 11.8mm x200k SE(U) 12/19/02 10:07
200 nm

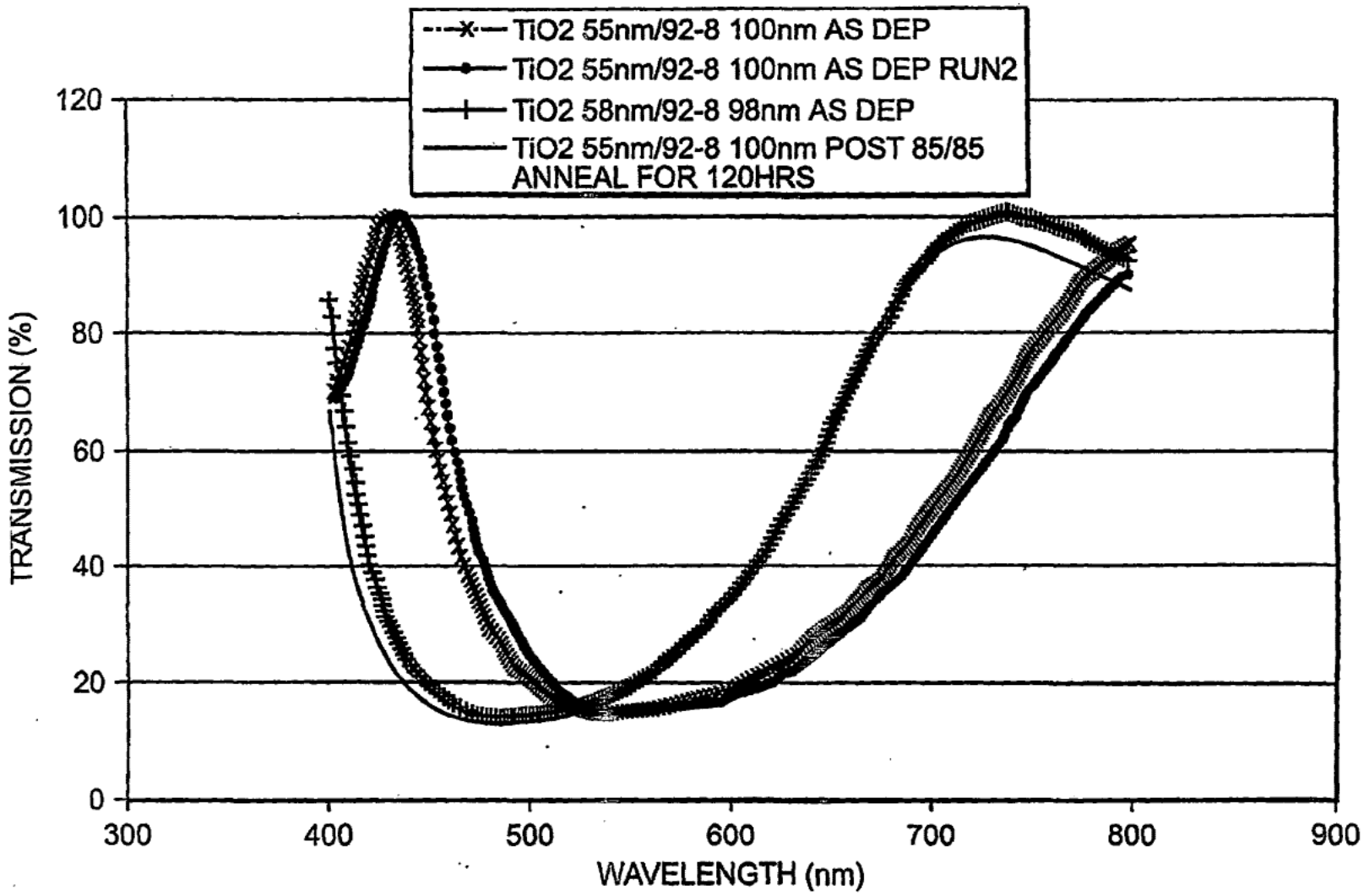
TiO2 55nm/92-8 100nm AS DEP
TiO2 55nm/92-8 100nm AS DEP RUN2
TiO2 58nm/92-8 98nm AS DEP
TiO2 55nm/92-8 100nm POST 85/85 ANNEAL FOR 120HRS
TRANSMISSION (%)
120
100
80
60
40
20
0
300
400
500
600
700
800
900
WAVELENGTH (nm)

FIG. 11

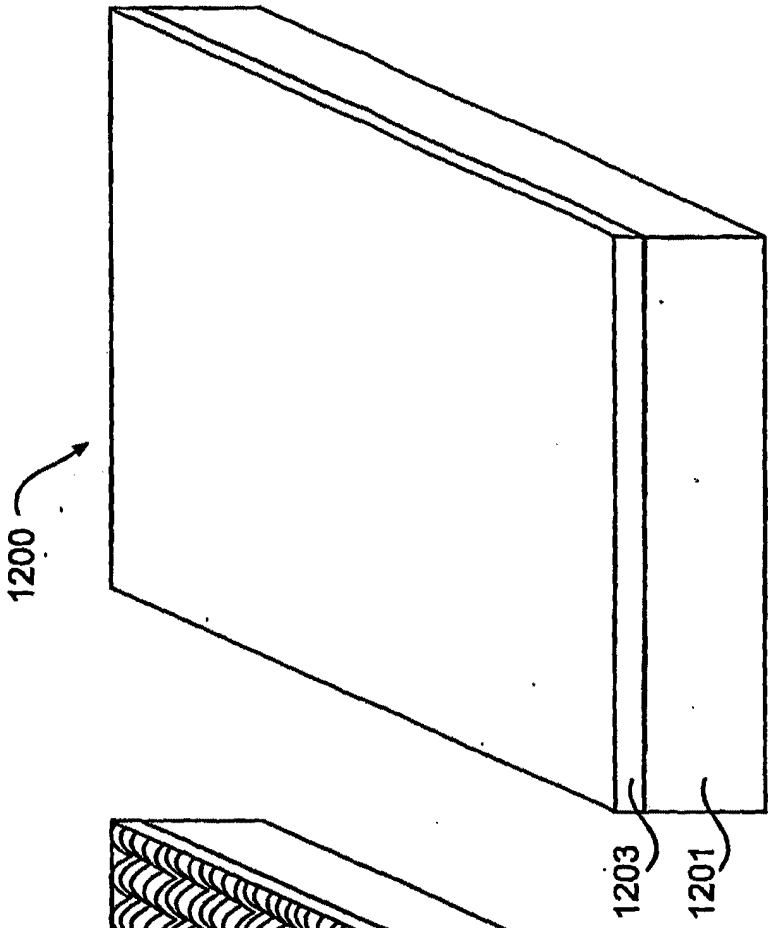

FIG. 12B

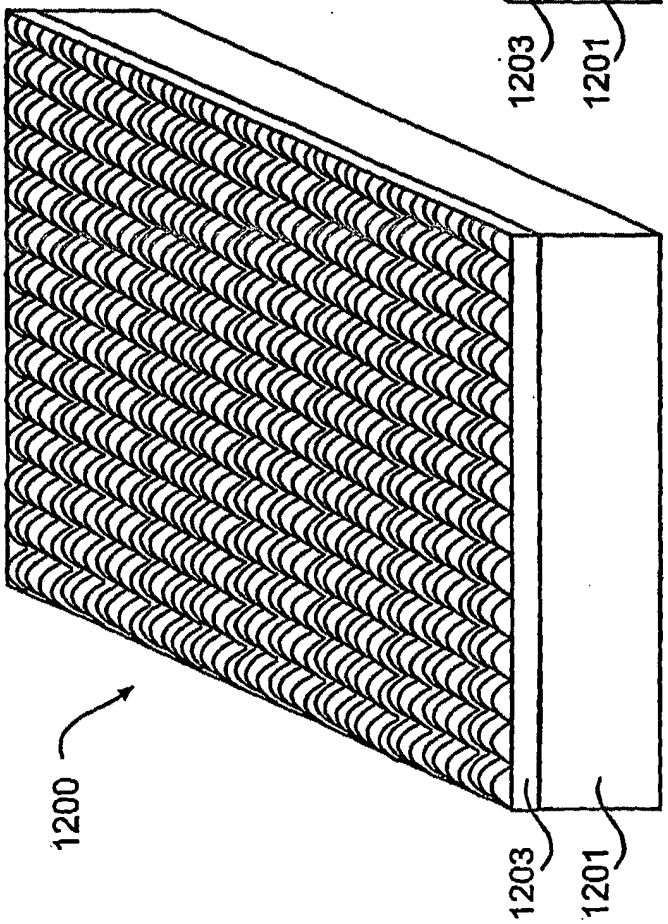

FIG. 12A

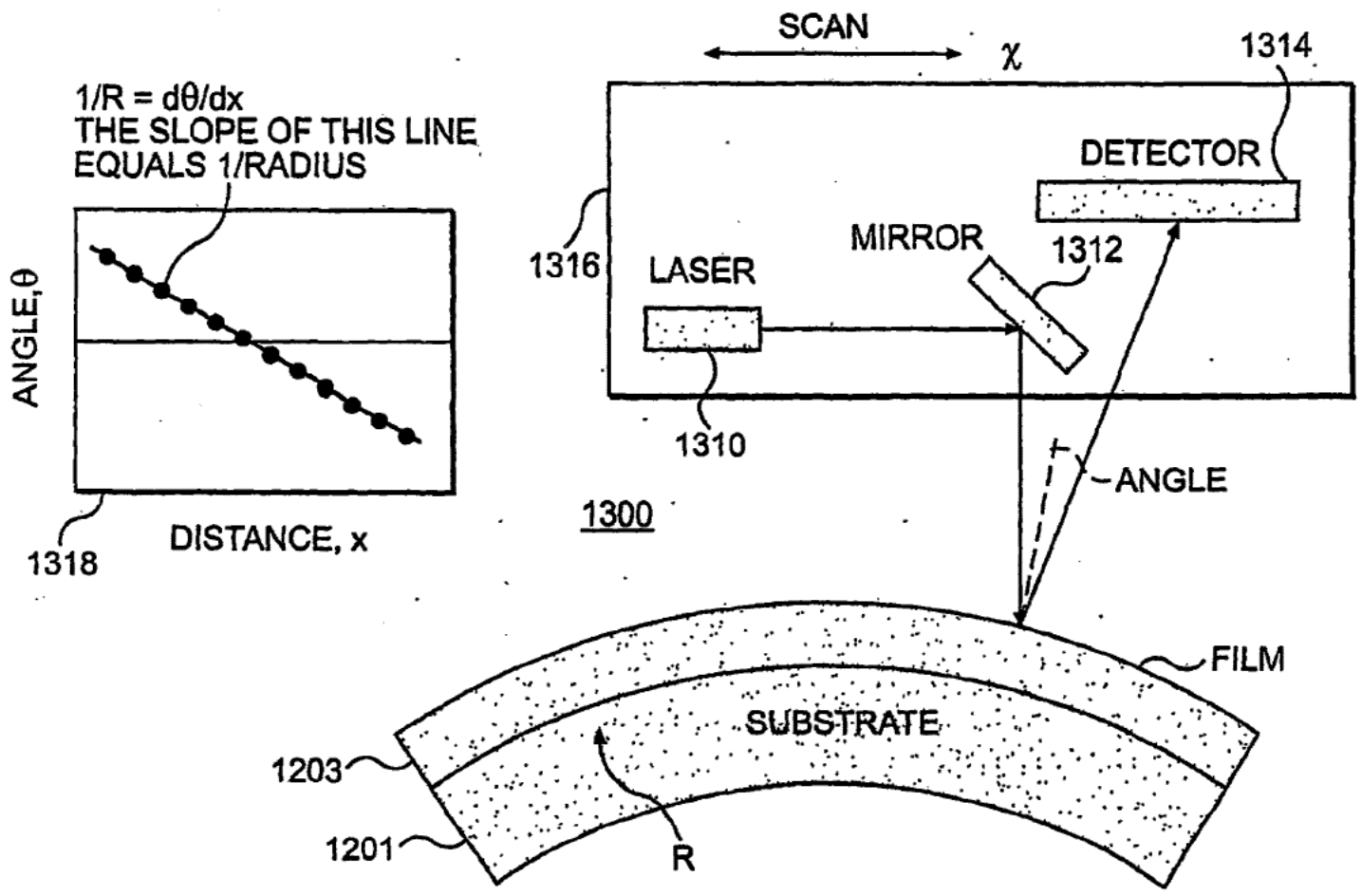
1/R = dθ/dx
THE SLOPE OF THIS LINE
EQUALS 1/RADIUS
ANGLE,θ
DISTANCE, x
1318
SCAN
χ
1314
DETECTOR
1316
LASER
MIRROR
1312
1310
1300
ANGLE
FILM
SUBSTRATE
1203
1201
R

FIG. 13

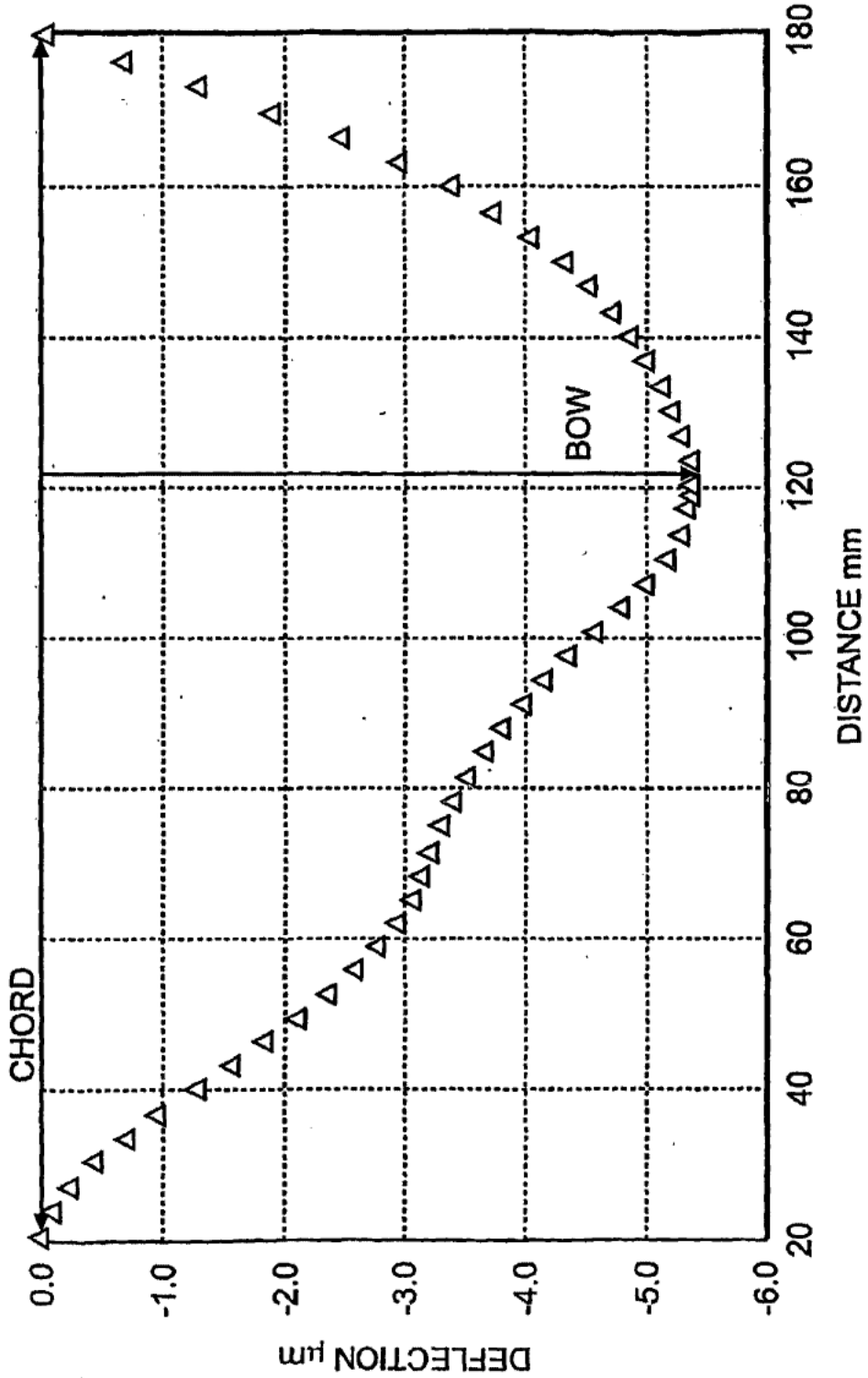
CHORD
BOW
DEFLECTION μm
0.0
-1.0
-2.0
-3.0
-4.0
-5.0
-6.0
20
40
60
80
100
120
140
160
180
DISTANCE mm

FIG. 14

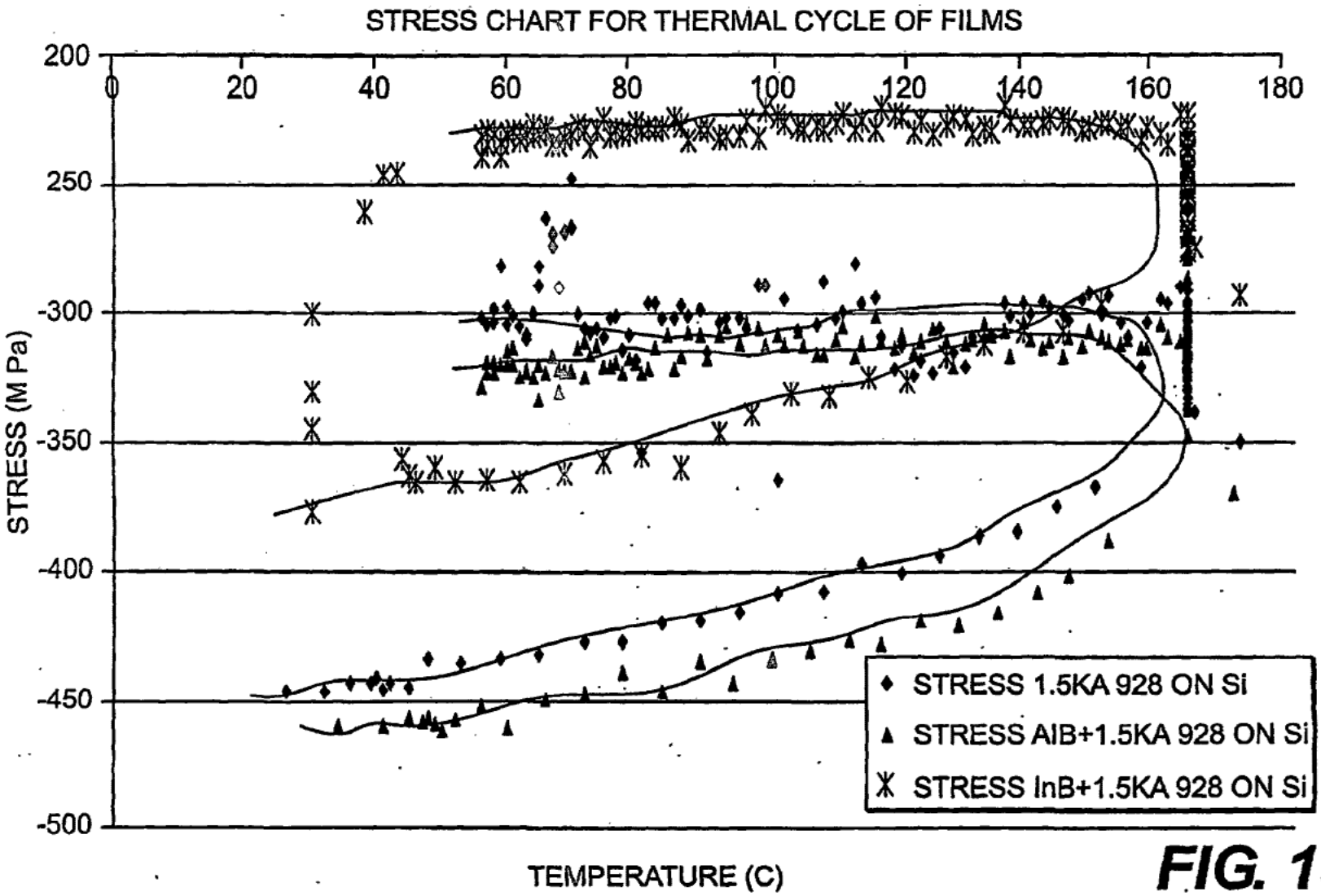
STRESS CHART FOR THERMAL CYCLE OF FILMS
200
250
-300
-350
-400
-450
-500
0
20
40
60
80
100
120
140
160
180
STRESS (M Pa)
TEMPERATURE (C)
STRESS 1.5KA 928 ON Si
STRESS AlB+1.5KA 928 ON Si
STRESS InB+1.5KA 928 ON Si

FIG. 15

FIG. 16B

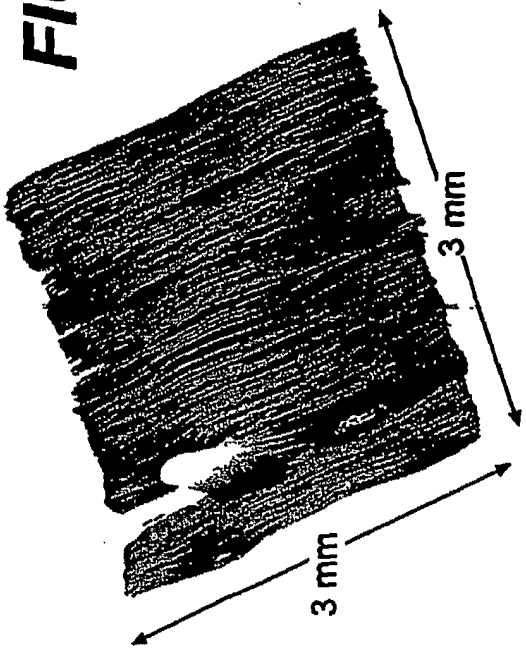

FIG. 16D

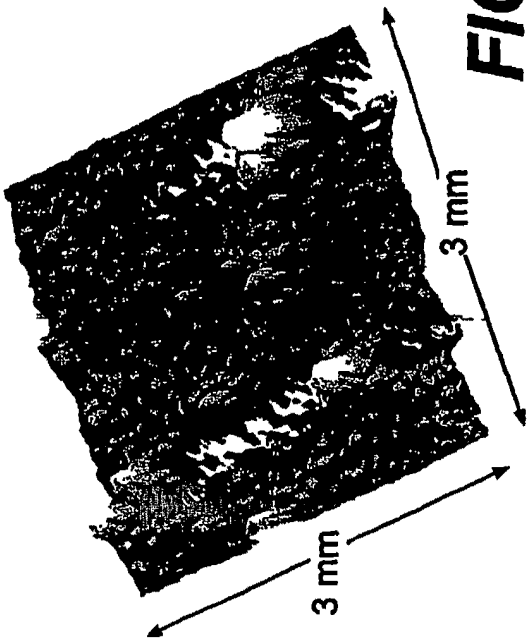

FIG. 16A

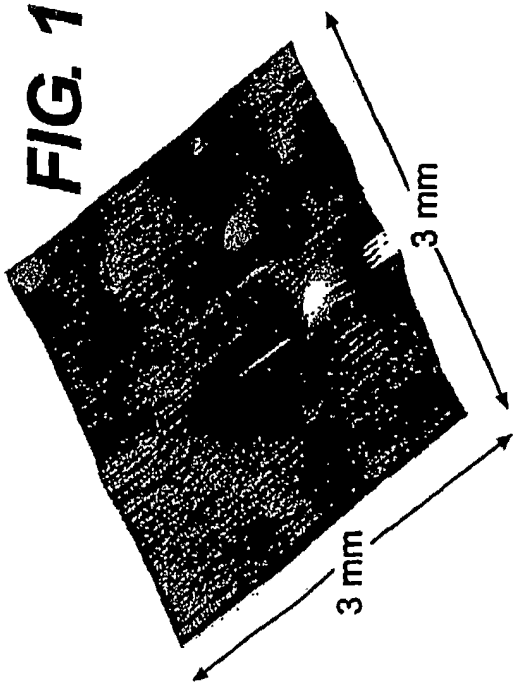

FIG. 16C

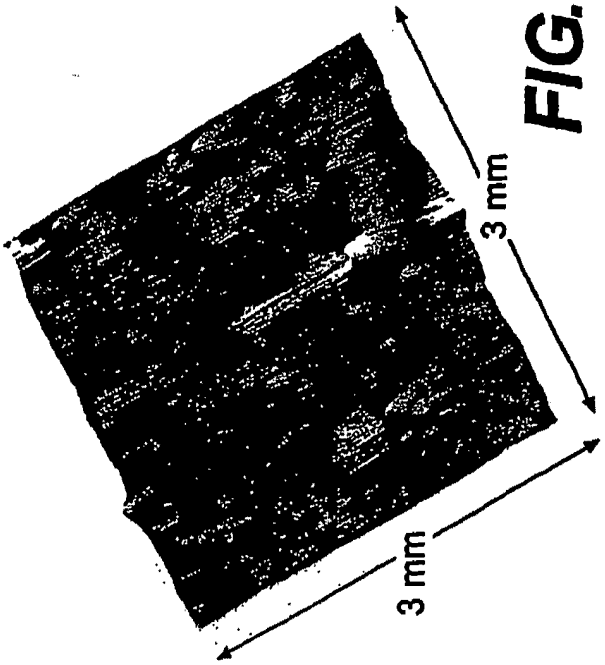

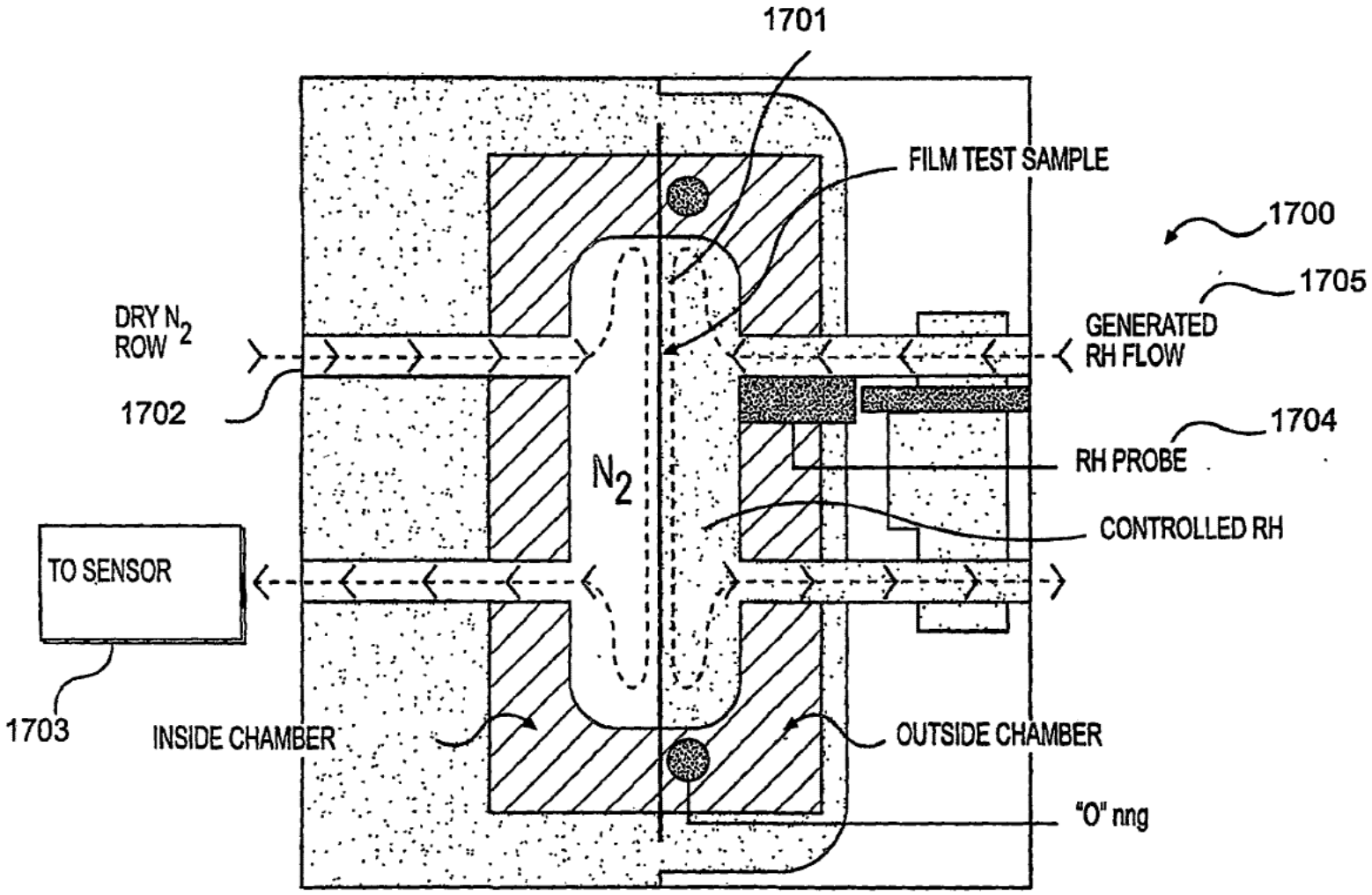
1701
FILM TEST SAMPLE
1700
1705
GENERATED
RH FLOW
DRY N_2
ROW
1702
1704
RH PROBE
N_2
CONTROLLED RH
TO SENSOR
1703
INSIDE CHAMBER
OUTSIDE CHAMBER
"O" nng

FIG. 17

FIG. 18B

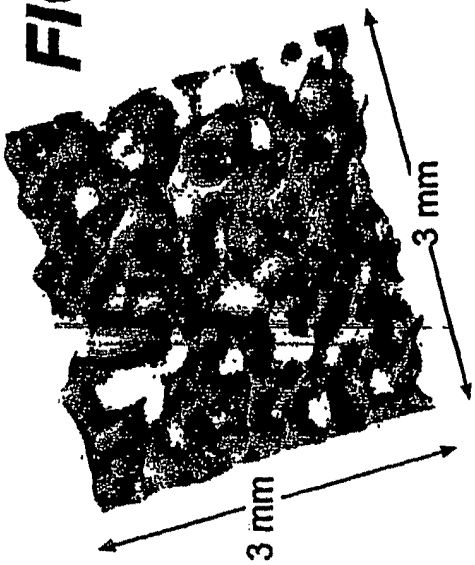

FIG. 18D

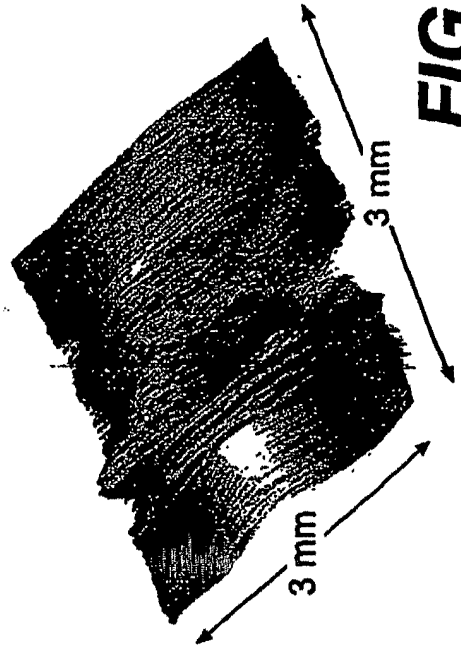

FIG. 18A

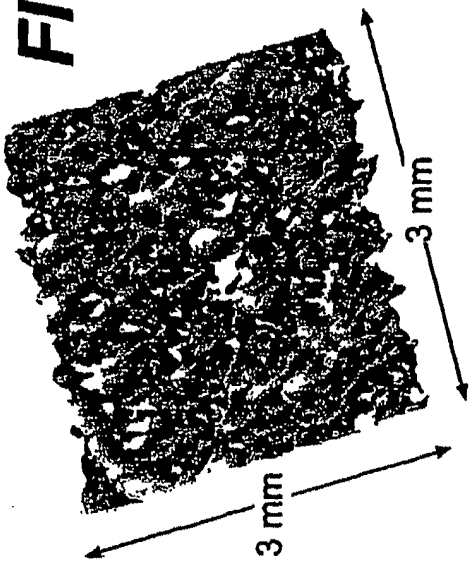

FIG. 18C

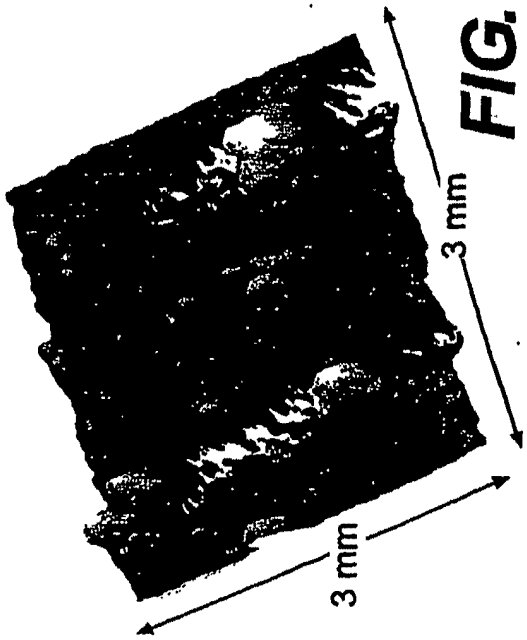

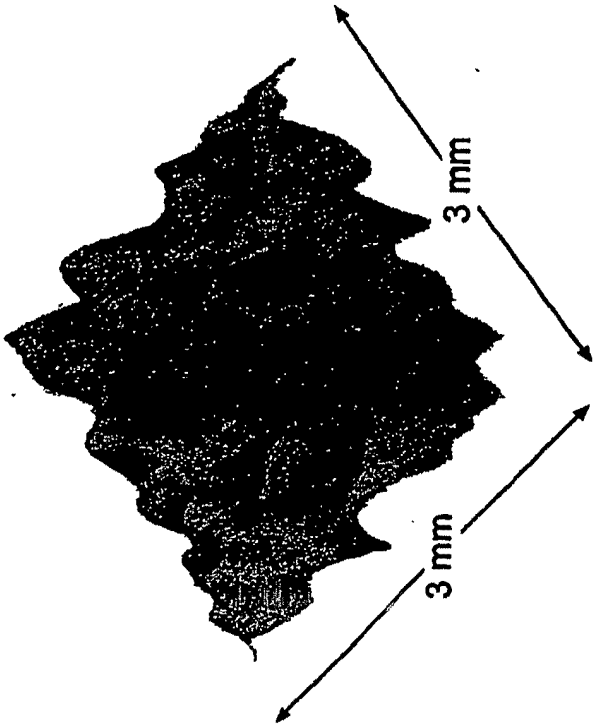

FIG. 19B

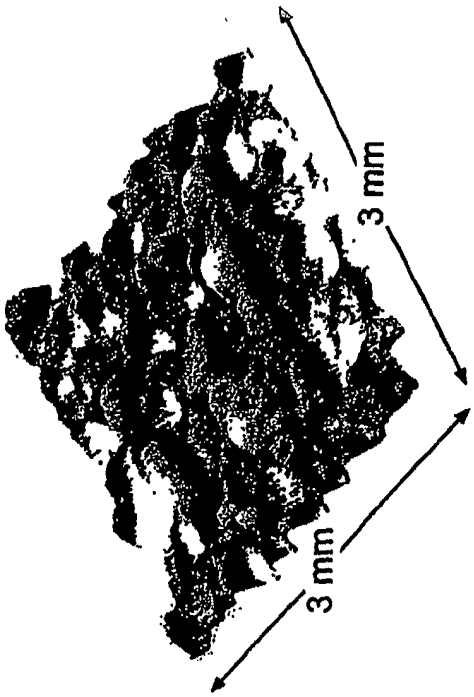

FIG. 19A

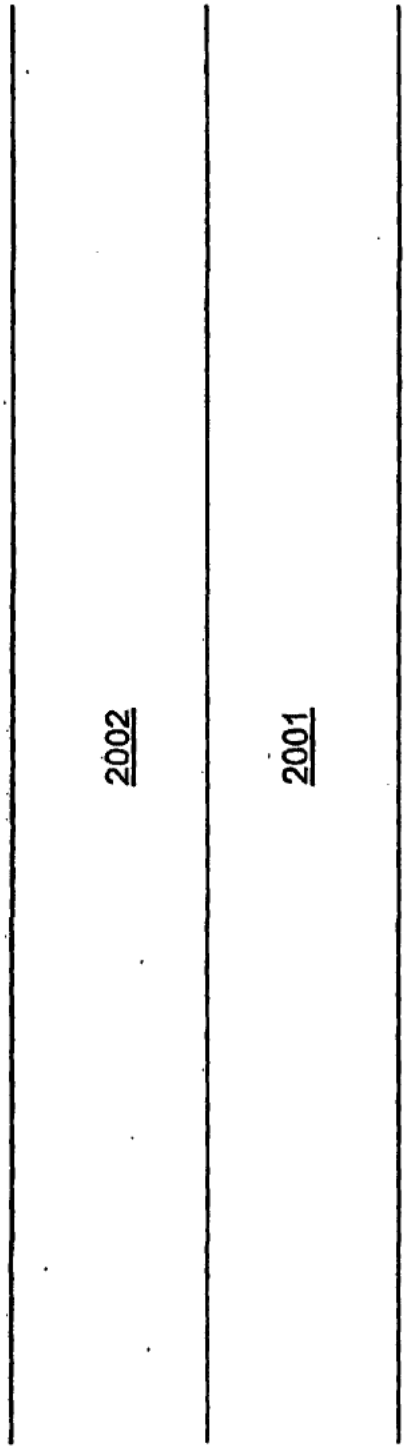

FIG. 20

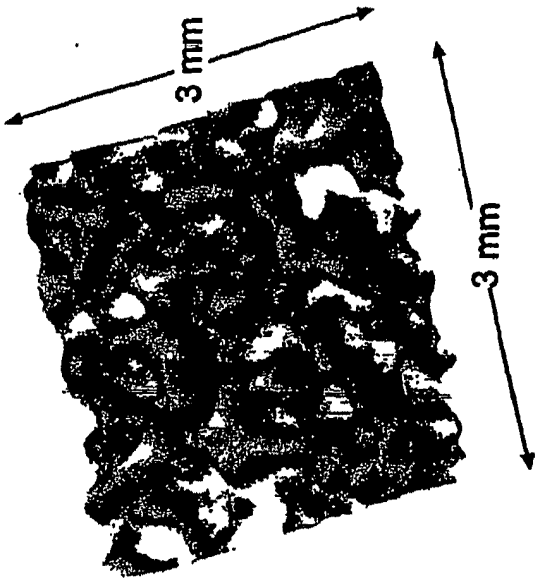

FIG. 21B

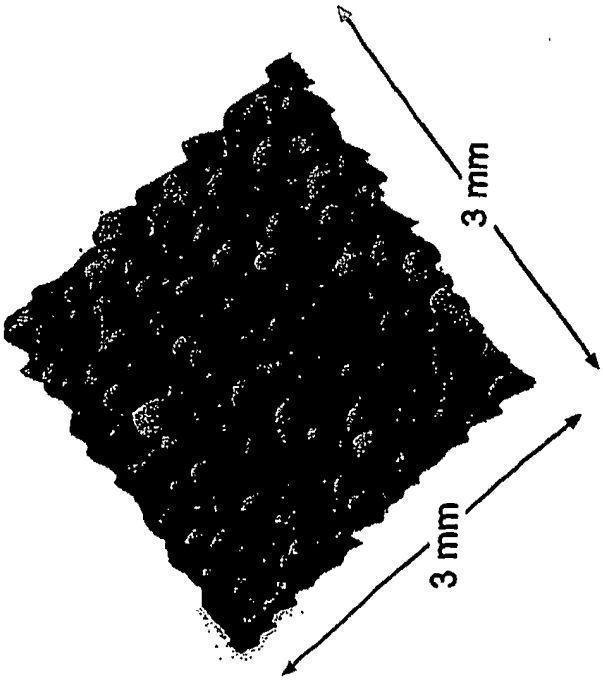

FIG. 21A

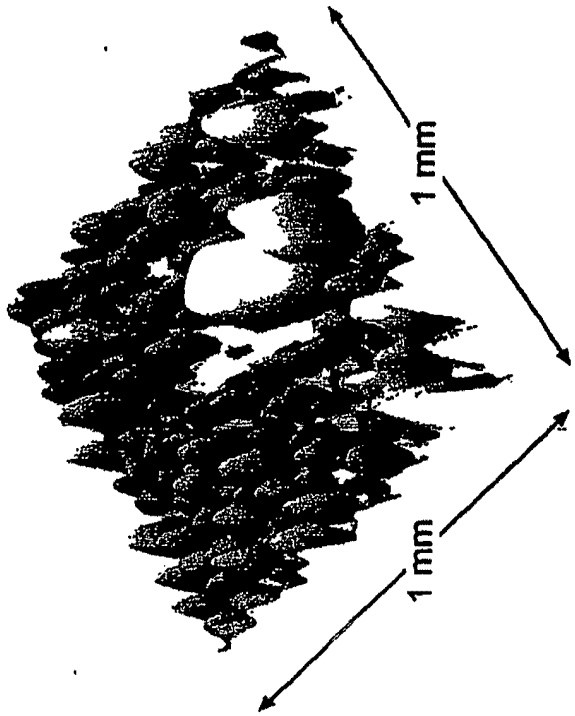

FIG. 22B

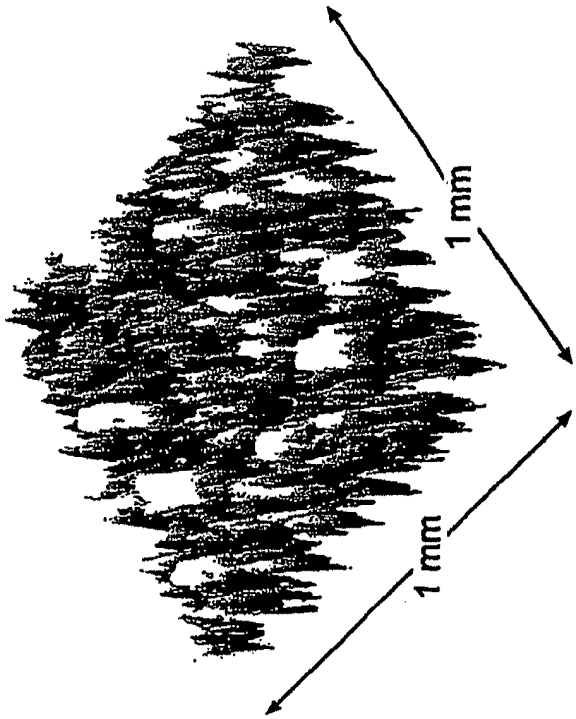

FIG. 22A

This Page is Inserted by IFW Indexing and Scanning Operations and is not part of the Official Record

BEST AVAILABLE IMAGES

Defective images within this document are accurate representations of the original documents submitted by the applicant.

Defects in the images include but are not limited to the items checked:

- ☐ BLACK BORDERS
- ☐ IMAGE CUT OFF AT TOP, BOTTOM OR SIDES
- ☐ FADED TEXT OR DRAWING
- ☐ BLURRED OR ILLEGIBLE TEXT OR DRAWING
- ☐ SKEWED/SLANTED IMAGES
- ☑ COLOR OR BLACK AND WHITE PHOTOGRAPHS
- ☐ GRAY SCALE DOCUMENTS
- ☑ LINES OR MARKS ON ORIGINAL DOCUMENT
- ☐ REFERENCE(S) OR EXHIBIT(S) SUBMITTED ARE POOR QUALITY
- ☐ OTHER: _____

IMAGES ARE BEST AVAILABLE COPY.
As rescanning these documents will not correct the image problems checked, please do not report these problems to the IFW Image Problem Mailbox.

Ref #	Hits	Search Query	DBs	Default Operator	Plurals	Time Stamp
L9	534	target and DC and magnetic	EPO; JPO; DERWENT; IBM_TDB	OR	OFF	2005/03/21 08:58
S1	253	438/769.ccls.	US-PGPUB; USPAT	OR	OFF	2005/03/19 14:31
S2	544	438/770.ccls.	US-PGPUB; USPAT	OR	OFF	2005/03/19 14:31
S3	109	438/771.ccls.	US-PGPUB; USPAT	OR	OFF	2005/03/19 14:32
S4	734	438/787.ccls.	US-PGPUB; USPAT	OR	OFF	2005/03/19 14:32
S5	531	438/788.ccls.	US-PGPUB; USPAT	OR	OFF	2005/03/19 14:32
S6	22803	target and DC and magnetic	US-PGPUB; USPAT	OR	OFF	2005/03/21 08:58
S7	675681	@ad>"20020316" or @rlad>"20020316"	US-PGPUB; USPAT	OR	OFF	2005/03/19 14:33
S8	1	S1 and S6	US-PGPUB; USPAT	OR	OFF	2005/03/19 14:34
S9	4	S2 and S6	US-PGPUB; USPAT	OR	OFF	2005/03/19 14:33
S10	6	S3 and S6	US-PGPUB; USPAT	OR	OFF	2005/03/19 14:33
S11	2	S4 and S6	US-PGPUB; USPAT	OR	OFF	2005/03/19 14:33
S13	10	S5 and S6	US-PGPUB; USPAT	OR	OFF	2005/03/19 14:34
S14	4	S9 not S7	US-PGPUB; USPAT	OR	OFF	2005/03/19 14:36
S15	6	S10 not S7	US-PGPUB; USPAT	OR	OFF	2005/03/19 14:37
S16	2	S11 not S7	US-PGPUB; USPAT	OR	OFF	2005/03/19 14:37
S17	9	S13 not S7	US-PGPUB; USPAT	OR	OFF	2005/03/19 14:39
S18	90830	"438"/$.ccls.	US-PGPUB; USPAT	OR	OFF	2005/03/19 14:39
S19	551	S6 and S18	US-PGPUB; USPAT	OR	OFF	2005/03/19 14:39
S20	366	S19 not S7	US-PGPUB; USPAT	OR	OFF	2005/03/19 14:39
S21	7	"6117279"	US-PGPUB; USPAT	OR	OFF	2005/03/19 14:44

S22	1437	ceramic with target	US-PGPUB; USPAT	OR	OFF	2005/03/19 14:50
S23	240	S6 and S22	US-PGPUB; USPAT	OR	OFF	2005/03/19 14:50
S24	173	S23 not S7	US-PGPUB; USPAT	OR	OFF	2005/03/19 14:50

UNITED STATES PATENT AND TRADEMARK OFFICE

UNITED STATES DEPARTMENT OF COMMERCE
United States Patent and Trademark Office
Address: COMMISSIONER FOR PATENTS
P.O. Box 1450
Alexandria, Virginia 22313-1450
www.uspto.gov

APPLICATION NO.	FILING DATE	FIRST NAMED INVENTOR	ATTORNEY DOCKET NO.	CONFIRMATION NO.
10/954,182	10/01/2004	Hongmei Zhang	09140-0016-01000	9873

22852 7590 03/25/2005

FINNEGAN, HENDERSON, FARABOW, GARRETT & DUNNER LLP
901 NEW YORK AVENUE, NW
WASHINGTON, DC 20001-4413

EXAMINER
ESTRADA, MICHELLE

ART UNIT	PAPER NUMBER
2823	

DATE MAILED: 03/25/2005

Please find below and/or attached an Office communication concerning this application or proceeding.

Office Action Summary	Application No.	Applicant(s)	
	10/954,182	ZHANG ET AL.	
	Examiner	Art Unit	
	Michelle Estrada	2823	

-- The MAILING DATE of this communication appears on the cover sheet with the correspondence address --

Period for Reply

A SHORTENED STATUTORY PERIOD FOR REPLY IS SET TO EXPIRE 3 MONTH(S) FROM THE MAILING DATE OF THIS COMMUNICATION.

- Extensions of time may be available under the provisions of 37 CFR 1.136(a). In no event, however, may a reply be timely filed after SIX (6) MONTHS from the mailing date of this communication.
- If the period for reply specified above is less than thirty (30) days, a reply within the statutory minimum of thirty (30) days will be considered timely.
- If NO period for reply is specified above, the maximum statutory period will apply and will expire SIX (6) MONTHS from the mailing date of this communication.
- Failure to reply within the set or extended period for reply will, by statute, cause the application to become ABANDONED (35 U.S.C. § 133). Any reply received by the Office later than three months after the mailing date of this communication, even if timely filed, may reduce any earned patent term adjustment. See 37 CFR 1.704(b).

Status

1)☒ Responsive to communication(s) filed on 01 October 2004.

2a)☐ This action is **FINAL**. 2b)☒ This action is non-final.

3)☐ Since this application is in condition for allowance except for formal matters, prosecution as to the merits is closed in accordance with the practice under *Ex parte Quayle*, 1935 C.D. 11, 453 O.G. 213.

Disposition of Claims

4)☒ Claim(s) 40-84 is/are pending in the application.

4a) Of the above claim(s) _____ is/are withdrawn from consideration.

5)☐ Claim(s) _____ is/are allowed.

6)☒ Claim(s) 40-58 and 63-81 is/are rejected.

7)☒ Claim(s) 59-62 and 82-84 is/are objected to.

8)☐ Claim(s) _____ are subject to restriction and/or election requirement.

Application Papers

9)☐ The specification is objected to by the Examiner.

10)☐ The drawing(s) filed on _____ is/are: a)☐ accepted or b)☐ objected to by the Examiner.

Applicant may not request that any objection to the drawing(s) be held in abeyance. See 37 CFR 1.85(a).

Replacement drawing sheet(s) including the correction is required if the drawing(s) is objected to. See 37 CFR 1.121(d).

11)☐ The oath or declaration is objected to by the Examiner. Note the attached Office Action or form PTO-152.

Priority under 35 U.S.C. § 119

12)☐ Acknowledgment is made of a claim for foreign priority under 35 U.S.C. § 119(a)-(d) or (f).

a)☐ All b)☐ Some * c)☐ None of:

1.☐ Certified copies of the priority documents have been received.

2.☐ Certified copies of the priority documents have been received in Application No. _____.

3.☐ Copies of the certified copies of the priority documents have been received in this National Stage application from the International Bureau (PCT Rule 17.2(a)).

* See the attached detailed Office action for a list of the certified copies not received.

Attachment(s)

1) ☒ Notice of References Cited (PTO-892)

2) ☐ Notice of Draftsperson's Patent Drawing Review (PTO-948)

3) ☒ Information Disclosure Statement(s) (PTO-1449 or PTO/SB/08) Paper No(s)/Mail Date 10/1/04.

4) ☐ Interview Summary (PTO-413) Paper No(s)/Mail Date. _____ .

5) ☐ Notice of Informal Patent Application (PTO-152)

6) ☐ Other: _____.

DETAILED ACTION

Claim Objections

Claims 1-62 are objected to because of the following informalities:

In claim 40, line 2, it appears that --a-- should be inserted after "providing".

In claim 40, line 2, it appears that "the" should be replaced with --a--.

In claim 40, line 3, it appears that "a" should be replaced with --the--.

In claim 59, line 1, "the oxide" lacks antecedent basis.

In claim 60, line 1, "the oxide" lacks antecedent basis.

In claim 61, line 1, "the metallic" lacks antecedent basis.

Appropriate correction is required.

Claim Rejections - 35 USC § 102

The following is a quotation of the appropriate paragraphs of 35 U.S.C. 102 that form the basis for the rejections under this section made in this Office action:

> A person shall be entitled to a patent unless –
>
> (b) the invention was patented or described in a printed publication in this or a foreign country or in public use or on sale in this country, more than one year prior to the date of application for patent in the United States.

Claims 40, 44, 45, 47, 49, 51, 52, 63, 67, 68, 70, 72, 74 and 75 are rejected under 35 U.S.C. 102(b) as being anticipated by Smolanoff et al. (6,117,279).

Re claim 40, Smolanoff et al. disclose providing a process gas between the target (16) and a substrate (15); providing pulsed DC power to the target (Col. 5, lines

50-55); providing a magnetic field to the target (Col. 6, lines 1-7); and wherein a material is deposited on the substrate (Col. 5, lines 22-26).

Re claim 44, Smolanoff et al. disclose further including providing filtering (22) of pulsed DC power to the target in order to protect a pulsed DC power supply.

Re claim 45, Smolanoff et al. disclose wherein the magnetic field is provided by a moving magnetron (Col. 5, lines 39-49).

Re claim 47, Smolanoff et al. disclose wherein the process gas includes a mixture of oxygen and argon (Col. 7, lines 22-27).

Re claim 49, Smolanoff et al. disclose wherein the process gas further includes nitrogen (Col. 7, lines 25-26).

Re claim 51, Smolanoff et al. disclose further including uniformly sweeping the target with a magnetic field (Col. 6, lines 1-6).

Re claim 52, Smolanoff et al. disclose wherein sweeping the target with a magnetic field includes sweeping a magnet in one direction across the target where the magnet extends beyond the target in the opposite direction (Col. 6, lines 1-6).

Re claim 63, Smolanoff et al. disclose a target area for receiving a target (76); a magnetic field generator (20) supplying a magnetic field to the target; a substrate area (14) opposite the target area for receiving a substrate (15); and a pulsed DC power supply coupled to the target (21); wherein a material is deposited on the substrate when pulsed DC power from the pulsed DC power supply is applied to the target in the presence of a process gas.

Re claim 67, Smolanoff et al. disclose further including providing filtering (22) of pulsed DC power to the target in order to protect a pulsed DC power supply.

Re claim 68, Smolanoff et al. disclose wherein the magnetic field is provided by a moving magnetron (Col. 5, lines 39-49).

Re claim 70, Smolanoff et al. disclose wherein the process gas includes a mixture of oxygen and argon (Col. 7, lines 22-27).

Re claim 72, Smolanoff et al. disclose wherein the process gas further includes nitrogen (Col. 7, lines 25-26).

Re claim 74, Smolanoff et al. disclose further including uniformly sweeping the target with a magnetic field (Col. 6, lines 1-6).

Re claim 75, Smolanoff et al. disclose wherein sweeping the target with a magnetic field includes sweeping a magnet in one direction across the target where the magnet extends beyond the target in the opposite direction (Col. 6, lines 1-6).

Claim Rejections - 35 USC § 103

The following is a quotation of 35 U.S.C. 103(a) which forms the basis for all obviousness rejections set forth in this Office action:

> (a) A patent may not be obtained though the invention is not identically disclosed or described as set forth in section 102 of this title, if the differences between the subject matter sought to be patented and the prior art are such that the subject matter as a whole would have been obvious at the time the invention was made to a person having ordinary skill in the art to which said subject matter pertains. Patentability shall not be negatived by the manner in which the invention was made.

Claims 41, 42, 46, 48, 50, 64, 65, 69, 71 and 73 rejected under 35 U.S.C. 103(a) as being unpatentable over Smolanoff as applied to claims 40, 44, 45, 47, 49, 51, 52, 63, 67, 68, 70, 72, 74 and 75 above, and further in view of Chen et al. (2004/0077161).

Re claims 41 and 64, Smolanoff et al. disclose wherein the process gas includes oxygen.

Re claimd 42 and 65, Smolanoff et al. disclose wherein the process gas includes N_2 or NH_3.

Smolanoff et al. do not disclose wherein the target is a metallic target.

Re claims 41 and 42, Chen et al .disclose forming a coating layer in a substrate; applying a magnetic field to a target; wherein the target is a metallic target.

It would have been within the scope of one of ordinary skill in the art to combine the teachings of Smolanoff et al. and Chen et al. to enable the target material of Smolanoff et al. to be the same according to the teachings of Chen et al. because one of ordinary skill in the art would have been motivated to look to alternative suitable target materials of the disclosed target of Smolanoff et al. and art recognized suitability for an intended purpose has been recognized to be motivation to combine. See MPEP 2144.07.

Re claim 46, Chen et al. disclose further including holding the temperature of the substrate substantially constant (Page 3, Paragraph [0046]).

Re claim 48, Chen et al. disclose wherein the oxygen flow is adjusted by the mass flow controllers; thereby it will adjust the index refraction of the film.

Re claim 50, Chen et al. disclose wherein providing pulsed DC power to a target includes providing pulsed DC power to a target, which has an area larger than that of the substrate (See fig. 3).

Re claim 69, Chen et al. disclose further including holding the temperature of the substrate substantially constant (Page 3, Paragraph [0046]).

Re claim 71, Chen et al. disclose wherein the oxygen flow is adjusted by the mass flow controllers; thereby it will adjust the index refraction of the film.

Re claim 73, Chen et al. disclose wherein the target has an area larger than that of the substrate (See fig. 3).

Claims 43, 53-58, 66 and 76-81 are rejected under 35 U.S.C. 103(a) as being unpatentable over Smolanoff as applied to claims 40, 44, 45, 47, 49, 51, 52, 63, 67, 68, 70, 72, 74 and 75 above, and further in view of Milonopoulou et al. (2003/0175142).

Smolanoff et al. do not disclose wherein the target is a ceramic target.

Milonopoulou et al. disclose forming a coating layer on a substrate; providing a target (12), which is ceramic (Abstract).

It would have been within the scope of one of ordinary skill in the art to combine the teachings of Smolanoff et al. and Chen et al. to enable the target material of Smolanoff et al. to be the same according to the teachings of Milonopoulou et al. because one of ordinary skill in the art would have been motivated to look to alternative suitable target materials of the disclosed target of Smolanoff et al. and art recognized

suitability for an intended purpose has been recognized to be motivation to combine. See MPEP 2144.07.

Re claim 53, Milonopoulou et al. disclose wherein the target is an alloyed target (Abstract).

Re claim 54, Milonopoulou et al. disclose wherein the alloyed target includes one or more rare earth ions.

Re claim 55, Milonopoulou et al. disclose wherein the alloyed target includes Si and Al.

Re claim 56, Milonopoulou et al. disclose wherein the alloyed target includes one or more elements taken from a set consisting of Si, Al, Er and Yb.

Re claim 57, Milonopoulou et al. disclose wherein the alloyed target is a tiled target.

Re claim 58, Milonopoulou et al. disclose wherein each tiled target is formed by prealloy atomization and hot isostatic pressing of a powder (Page 2, Paragraph [0020]).

Re claim 66, Milonopoulou et al. disclose forming a coating layer on a substrate; providing a target (12), which is ceramic (Abstract).

Re claim 76, Milonopoulou et al. disclose wherein the target is an alloyed target (Abstract).

Re claim 77, Milonopoulou et al. disclose wherein the alloyed target includes one or more rare earth ions.

Re claim 78, Milonopoulou et al. disclose wherein the alloyed target includes Si and Al.

Re claim 79, Milonopoulou et al. disclose wherein the alloyed target includes one or more elements taken from a set consisting of Si, Al, Er and Yb.

Re claim 80, Milonopoulou et al. disclose wherein the alloyed target is a tiled target.

Re claim 81, Milonopoulou et al. disclose wherein each tiled target is formed by prealloy atomization and hot isostatic pressing of a powder (Page 2, Paragraph [0020]).

Allowable Subject Matter

Claims 59, 60-62 and 82-84 are objected to as being dependent upon a rejected base claim, but would be allowable if rewritten in independent form including all of the limitations of the base claim and any intervening claims.

Conclusion

The prior art made of record and not relied upon is considered pertinent to applicant's disclosure.

Any inquiry concerning this communication or earlier communications from the examiner should be directed to Michelle Estrada whose telephone number is 571-272-1858. The examiner can normally be reached on Monday through Friday.

If attempts to reach the examiner by telephone are unsuccessful, the examiner's supervisor, Olik Chaudhuri can be reached on 571-272-1855. The fax phone number for the organization where this application or proceeding is assigned is 703-872-9306.

Any inquiry of a general nature or relating to the status of this application or proceeding should be directed to the receptionist whose telephone number is 571-272-2800.

Information regarding the status of an application may be obtained from the Patent Application Information Retrieval (PAIR) system. Status information for published applications may be obtained from either Private PAIR or Public PAIR. Status information for unpublished applications is available through Private PAIR only. For more information about the PAIR system, see http://pair-direct.uspto.gov. Should you have questions on access to the Private PAIR system, contact the Electronic Business Center (EBC) at 866-217-9197 (toll-free).

Michelle Estrada
Examiner
Art Unit 2823

ME
March 21, 2005

OMB No. 0651-0011

INFORMATION DISCLOSURE CITATION

Atty. Docket No.	09140-0016-01000	Appln. No.	~~Not Yet Assigned~~ 10/954,182
Applicant	ZHANG et al.		
Filing Date	October 1, 2004	Group:	~~Not Yet Assigned~~ 2823

U.S. PATENT DOCUMENTS

Examiner Initial*		Document Number	Issue Date/ Publication Date	Name	Class	Sub Class	Filing Date If Appropriate
MFE		2002/0106297 A1	Aug. 8, 2002	Ueno et al.	419	12	
		2003/0019326 A1	Jan. 30, 2003	Han et al.	45	245	
		2003/0022487 A1	Jan. 30, 2003	Yoon et al.	438	642	
		2003/0042131 A1	Mar. 6, 2003	Johnson	204	192.12	
		2003/0063883 A1	Apr. 3, 2003	Demaray et al.	385	129	
		2003/0077914 A1	Apr. 24, 2003	Le et al.	438	763	
		2003/0079838 A1	May 1, 2003	Brcka	156	345.48	
		2003/0141186 A1	Jul. 31, 2003	Wang et al.	204	298.07	
		2003/0175142 A1	Sep. 18, 2003	Milonopoulou et al.	419	49	
		3,616,403	Oct. 26, 1971	Collins et al.	204	192	
		3,850,604	Nov. 26, 1974	Klein	65	32	
		4,111,523	Sep. 5, 1978	Kaminow et al.	350	96.14	
		4,437,966	Mar. 7, 1961	Hope et al	204	298	
		4,619,680	Oct. 28, 1986	Nourshargh et al.	65	3.12	
		4,915,810	Apr. 10, 1990	Kestigian et al.	204	298.04	
		4,978,437	Dec. 18, 1990	Wirz	204	192.	
		5,174,876	Dec. 29, 1992	Buchal et al.	427	526	
		5,196,041	Mar. 23, 1993	Tumminelli et al.	65	30.1	
		5,200,029	Apr. 6, 1993	Bruce et al.	156	657	
		5,206,925	Apr. 27, 1993	Nakazawa et al.	385	142	
MFE		5,225,288	Jul. 6, 1993	Beeson et al.	428	475.5	

Examiner	Michelle Estrada	Date Considered	3/16/05

*Examiner: Initial if reference considered, whether or not citation is in conformance with MPEP 609; draw line through citation if not in conformance and not considered. Include copy of this form with next communication to applicant.

Form PTO 1449 Patent and Trademark Office - U.S. Department of Commerce

OMB No. 0651-0011

INFORMATION DISCLOSURE CITATION

Atty. Docket No.	09140-0016-01000	Appln. No.	~~Not Yet Assigned~~ 10/954182
Applicant	ZHANG et al.		
Filing Date	October 1, 2004	Group:	~~Not Yet Assigned~~ 2823

U.S. PATENT DOCUMENTS

Examiner Initial*		Document Number	Issue Date/ Publication Date	Name	Class	Sub Class	Filing Date If Appropriate
		5,237,439	Aug. 17, 1993	Misono et al.	359	74	
		5,252,194	Oct. 12, 1993	Demaray et al.	204	298	
		5,287,427	Feb. 15, 1994	Atkins et al.	385	124	
		5,303,319	Apr. 12, 1994	Ford et al.	385	131	
		5,381,262	Jan. 10, 1995	Arima et al.	359	341	
		5,427,669	Jun. 27, 1995	Drummond	204	298.2	
		5,475,528	Dec. 12, 1995	LaBorde	359	341	
		5,483,613	Jan. 9, 1996	Bruce et al.	385	129	
		5,555,127	Sep. 10, 1996	Abdelkader et al.	359	341	
		5,565,071	Oct. 15, 1996	Demaray et al.	204	192	
		5,603,816	Feb. 18, 1997	Demaray et al.	204	298	
		5,607,560	Mar. 4, 1997	Hirabayashi et al	204	192.15	
		5,613,995	Mar. 25, 1997	Bhandarkar et al.	65	384	
		5,654,054	Aug. 5, 1997	Tropsha et al.	428	36.6	
		5,693,956	Dec. 2, 1997	Shi et al.	257	40	
		5,718,813	Feb. 17, 1998	Drummond	204	192.2	
		5,719,976	Feb. 17, 1998	Henry et al.	385	50	
		5,755,938	May 26, 1998	Fukui et al.	204	298.23	
		5,792,550	Aug. 11, 1998	Phillips et al.	428	336	
		5,830,330	Nov. 3, 1998	Lantsman	204	192.12	
		5,841,931	Nov. 24, 1998	Foresi et al.	385	131	

Examiner	Michelle Gabriada	Date Considered	3/16/05

*Examiner: Initial if reference considered, whether or not citation is in conformance with MPEP 609; draw line through citation if not in conformance and not considered. Include copy of this form with next communication to applicant.

Form PTO 1449 Patent and Trademark Office - U.S. Department of Commerce

OMB No. 0651-0011

INFORMATION DISCLOSURE CITATION

Atty. Docket No.	09140-0016-01000	Appln. No.	~~Not Yet Assigned~~ 10/954182
Applicant	ZHANG et al.		
Filing Date	October 1, 2004	Group:	~~Not Yet Assigned~~ 2823

U.S. PATENT DOCUMENTS

Examiner Initial*		Document Number	Issue Date/ Publication Date	Name	Class	Sub Class	Filing Date If Appropriate
MC		5,847,865	Dec. 8, 1998	Gopinath et al.	359	343	
		5,849,163	Dec. 15, 1998	Ichikawa et al.	204	192.23	
		5,855,744	Jan. 5, 1999	Halsey et al.	204	192	
		5,942,089	Aug. 24, 1999	Sproul et al.	204	192.13	
		5,948,215	Sep. 7, 1999	Lantsman	204	192.12	
		5,961,682	Oct. 5, 1999	Lee et al.	65	384	
		5,977,582	Nov. 2, 1999	Fleming et al.	257	310	
		6,001,224	Dec. 14, 1999	Drummond	204	192.12	
		6,024,844	Feb. 15, 2000	Drummond et al.	204	192.12	
		6,051,114	Apr. 18, 2000	Yao et al.	204	192.3	
		6,057,557	May 2, 2000	Ichikawa	257	59	
		6,093,944	Jul. 25, 2000	VanDover	257	310	
		6,162,709	Dec. 19, 2000	Raux et al.	438	513	
		6,176,986 B1	Jan. 23, 2001	Watanabe et al.	204	298.13	
		6,248,291 B1	Jun. 19, 2001	Nakagama et al.	419	46	
		6,280,585 B1	Aug. 28, 2001	Obinata et al.	204	298.19	
		6,287,986 B1	Sep. 11, 2001	Mihara	438	763	
		6,290,822 B1	Sep. 18, 2001	Fleming et al.	204	192.22	
		6,344,419 B1	Feb. 5, 2002	Forster et al.	438	758	
		6,350,353 B2	Feb. 26, 2002	Gopalraja et al.	204	192.3	
MC		6,358,810 B1	Mar. 19, 2002	Dornfest et al.	438	396	

Examiner	Michelle Estrada	Date Considered	3/15/05

*Examiner: Initial if reference considered, whether or not citation is in conformance with MPEP 609; draw line through citation if not in conformance and not considered. Include copy of this form with next communication to applicant.

Form PTO 1449 — Patent and Trademark Office - U.S. Department of Commerce

OMB No. 0651-0011

INFORMATION DISCLOSURE CITATION

Atty. Docket No.	09140-0016-01000	Appln. No.	~~Not Yet Assigned~~ 10/954182
Applicant	ZHANG et al.		
Filing Date	October 1, 2004	Group:	~~Not Yet Assigned~~ 2823

U.S. PATENT DOCUMENTS

Examiner Initial*		Document Number	Issue Date/ Publication Date	Name	Class	Sub Class	Filing Date If Appropriate
MK		6,409,965 B1	Jun. 25, 2002	Nagate et al.	419	26	
		6,413,382 B1	Jul. 2, 2002	Wang et al.	204	192.12	
		6,488,822 B1	Dec. 3, 2002	Moslehi	204	192.12	
		6,511,615 B1	Jan. 28, 2003	Dawes et al.	264	1.21	
		6,537,428 B1	Mar. 25, 2003	Xiong et al.	204	192.13	
		6,563,998 B1	May 13, 2003	Farah et al.	385	131	
		6,605,228 B1	Aug. 12, 2003	Kawaguchi et al.	216	24	
		6,602,338 B1	Aug. 5, 2003	Chen et al.	252	301.4	
MK		6,615,614 B1	Sep. 9, 2003	Makikawa et al.	65	386	

FOREIGN PATENT DOCUMENTS

		Document Number	Publication Date	Country	Class	Sub Class	Translation Yes or No
MK		EP 0 820 088	01/21/98	Europe	H 01 J	37/34	
		EP 0 867 985 A1	09/01/98	Europe	H 01 S	3/06	
		JP 6-010127	01/18/94	Japan	C 23 C	14/35	Abstract
		JP 6-100333	12/04/94	Japan	C 03 C	21/00	Abstract
		WO 00/22742	04/01/00	PCT	H O4 B		
		WO 00/36665	06/22/00	PCT	H 01 L	51/20	
		WO 02/12932	02/14/02	PCT	H 01 S	3/16	
		WO 96/23085	08/01/96	PCT	C 23 C	14/34	
MK		WO 97/35044	09/25/97	PCT	C 23 C	14/40	

Examiner Michelle Estrada	Date Considered 3/15/05

*Examiner: Initial if reference considered, whether or not citation is in conformance with MPEP 609; draw line through citation if not in conformance and not considered. Include copy of this form with next communication to applicant.

Form PTO 1449 Patent and Trademark Office - U.S. Department of Commerce

OMB No. 0651-0011

INFORMATION DISCLOSURE CITATION

Atty. Docket No.	09140-0016-01000	~~Appln. No. Not Yet Assigned~~	10/954182
Applicant	ZHANG et al.		
Filing Date	October 1, 2004	Group: ~~Not Yet Assigned~~	2823

	OTHER DOCUMENTS (Including Author, Title, Date, Pertinent Pages, Etc.)
	BARBIER, Denis, "Performances and potentioal applications of erbium doped planar waveguide amplifiers and lasers," GeeO, pp. 58-63.
	BELKIND et al., "Using pulsed direct current power for reactive sputtering of Al_2O_3," *J. Vac. Sci. Technol.* A 17(4), pp. 1934-40 (Jul. 1999).
	BYER et al., "Nonlinear Optics and Solid-state Lasers," *IEEE Journal on Selected Topics in Quantum Electronics*, Vol. 6, No. 6, pp. 921-929 (Nov. 2000).
	FUJII et al, "1.54 mm photoluminescence of Er^{3+} doped into SiO_2 films containing Si nanocrystals: Evidence for energy transfer from Si nanocrystals for Er^{3+}", *Appl. Phys. Lett.*, 71 (9), pp. 1198-1200 (September, 1997).
	KELLY et al., "Reactive pulsed magnetron sputtering process for alumina films," *J. Vac. Sci. Technol.* A 18(6), pp. 2890-96 (Nov. 2000).
	KELLY et al., "Control of the structure and properties of aluminum oxide coatings deposited by pulsed magnetron sputtering," *J. Vac. Sci. Technol.* A 17(3), pp. 945-953 (May 1999).
	PAN et al., "Planar Er3+-doped aluminosilicate waveguide amplifier with more than 10 dB gain across C-band," Optical Society of America, 3 pages (2000).
	ROBERTS et al., "The Photoluminescence of Erbium-doped Silicon Monoxide," Department of Electronics and Computer Science, 7 pages (June 1996).
	SCHILLER et al. "PVD Coating of Plastic Webs and Sheets with High Rates on Large Areas," European Materials Research Society 1999 Spring Meeting, Strasbourg, France (June 1-4, 1999).
	SHAW et al. "Use of Vapor Deposited Acrlate Coatings to Improve the Barrier Properties of MetallizedFilm," Society of Vacuum Coaters 505/856-7168, 37th Annual Technical Conference Proceedings, pp. 240-244 (1994).
	SHIN et al. "Dielectric and Electrical Properties of Sputter Grown $(Ba,Sr)TiO_3$ Thin Films," *J. Appl. Phys.*, Vol. 86, No. 1, pp. 506-513, (July 1, 1999).
	SHMULOVICH et al., "Recent progress in Erbium-doped waveguide amplifiers," Bell Laboratories, 3 pages (1999).
	TING et al., "Study of planarized sputter-deposited SiO2," *J. Vac. Sci. Technol.*, 15(3) pp. 1105-1112 (May/Jun. 1978).

Examiner	Michelle Estrada	Date Considered	3/16/05

*Examiner: Initial if reference considered, whether or not citation is in conformance with MPEP 609; draw line through citation if not in conformance and not considered. Include copy of this form with next communication to applicant.

Form PTO 1449 Patent and Trademark Office - U.S. Department of Commerce

OMB No. 0651-0011

INFORMATION DISCLOSURE CITATION

Atty. Docket No.	09140-0016-01000	Appln. No.	~~Not Yet Assigned~~ 10/954182
Applicant	ZHANG et al.		
Filing Date	October 1, 2004	Group:	~~Not Yet Assigned~~ 2823

	OTHER DOCUMENTS (Including Author, Title, Date, Pertinent Pages, Etc.)
	VAN DOVER, R.B. "Amorphous Lanthanide-Doped TiO_x Dielectric Films," *Appl. Phys. Lett.*, Vol. 74, No. 20, pp. 3041-3 (May 17 1999).
	WESTLINDER et al. "Simulation and Dielectric Characterization of Reactive dc Magnetron Cosputtered $(Ta_2O_5)_{1-x}(TiO_2)_x$ Thin Films," *J. Vac. Sci. Technol.* B, Vol 20, No. 3, pp. 855-861 (May/Jun 2002).
	YOSHIKAWA, K. et al., "Spray formed aluminium alloys for sputtering targets," *Power Metallurgy*, Vol. 43, No. 3, pp. 198-99 (2000)
	ZHANG, Hongmei et al. "High Dielectric Strength, High k TiO_2 Films by Pulsed DC, Reactive Sputter Deposition," (2002).

Examiner	Michelle Estrada	Date Considered	3/16/05

*Examiner: Initial if reference considered, whether or not citation is in conformance with MPEP 609; draw line through citation if not in conformance and not considered. Include copy of this form with next communication to applicant.

Form PTO 1449 Patent and Trademark Office - U.S. Department of Commerce

Notice of References Cited	Application/Control No. 10/954,182	Applicant(s)/Patent Under Reexamination ZHANG ET AL.	
	Examiner Michelle Estrada	Art Unit 2823	Page 1 of 1

U.S. PATENT DOCUMENTS

*		Document Number Country Code-Number-Kind Code	Date MM-YYYY	Name	Classification
	A	US-2003/0175142	09-2003	Milonopoulou et al.	419/49
	B	US-2004/0077161	04-2004	Chen et al.	438/622
	C	US-2003/0077914	04-2003	Le et al.	438/763
	D	US-6,281,142	08-2001	Basceri et al.	438/771
	E	US-6,361,662	03-2002	Chiba et al.	204/192.2
	F	US-6,117,279	09-2000	Smolanoff et al.	204/192.12
	G	US-			
	H	US-			
	I	US-			
	J	US-			
	K	US-			
	L	US-			
	M	US-			

FOREIGN PATENT DOCUMENTS

*		Document Number Country Code-Number-Kind Code	Date MM-YYYY	Country	Name	Classification
	N					
	O					
	P					
	Q					
	R					
	S					
	T					

NON-PATENT DOCUMENTS

*		Include as applicable: Author, Title Date, Publisher, Edition or Volume, Pertinent Pages)
	U	
	V	
	W	
	X	

*A copy of this reference is not being furnished with this Office action. (See MPEP § 707.05(a).)
Dates in MM-YYYY format are publication dates. Classifications may be US or foreign.

UNITED STATES PATENT AND TRADEMARK OFFICE

UNITED STATES DEPARTMENT OF COMMERCE
United States Patent and Trademark Office
Address: COMMISSIONER FOR PATENTS
P.O. Box 1450
Alexandria, Virginia 22313-1450
www.uspto.gov

Bib Data Sheet

CONFIRMATION NO. 9873

SERIAL NUMBER	FILING DATE	CLASS	GROUP ART UNIT	ATTORNEY DOCKET NO.
10/954,182	10/01/2004 RULE	438	2823	09140-0016-01000

APPLICANTS

Hongmei Zhang, San Jose, CA;

Mukundan Narasimhan, San Jose, CA;
Ravi Mullapudi, San Jose, CA;Richard E. Demaray, Portola Valley, CA;

** CONTINUING DATA **********
This application is a CON of 10/101,863 03/16/2002 RE

** FOREIGN APPLICATIONS **********
none RE

IF REQUIRED, FOREIGN FILING LICENSE GRANTED
** 11/20/2004

Foreign Priority claimed ☐ yes ☑ no 35 USC 119 (a-d) conditions met ☐ yes ☐ no ☐ Met after Allowance Verified and Acknowledged Examiner's Signature Initials	STATE OR COUNTRY CA	SHEETS DRAWING 27	TOTAL CLAIMS 45	INDEPENDENT CLAIMS 2

ADDRESS
22852
FINNEGAN, HENDERSON, FARABOW, GARRETT & DUNNER LLP
901 NEW YORK AVENUE, NW
WASHINGTON , DC
20001-4413

TITLE
Biased pulse DC reactive sputtering of oxide films

FILING FEE	FEES: Authority has been given in Paper No. _____ to charge/credit DEPOSIT ACCOUNT	☐ All Fees ☐ 1.16 Fees (Filing) ☐ 1.17 Fees (Processing Ext. of time)

RECEIVED 1240	No. _____ for following:	☐ 1.18 Fees (Issue) _____ ☐ Other _____ ☐ Credit

Search Notes

Application/Control No.	Applicant(s)/Patent under Reexamination
10/954,182	ZHANG ET AL.
Examiner	**Art Unit**
Michelle Estrada	2823

SEARCHED

Class	Subclass	Date	Examiner
438	769	3/21/2005	
438	770		
438	771		
438	787		
438	788	3/21/05	

INTERFERENCE SEARCHED

Class	Subclass	Date	Examiner

SEARCH NOTES (INCLUDING SEARCH STRATEGY)

	DATE	EXMR
See East search attached	3/21/2005	

07-27-05

1 fld 18

PATENT
Customer No. 22,852
Attorney Docket No. 9140.0016-01

IN THE UNITED STATES PATENT AND TRADEMARK OFFICE

In re Application of:	)	
	)	
ZHANG, Hongmei et al.	)	Group Art Unit: 2823
	)	
Application No.: 10/954,182	)	Examiner: ESTRADA, Michelle
	)	
Filed: October 1, 2004	)	
	)	Confirmation No.: 9873
For: BIASED PULSE DC REACTIVE SPUTTERING OF OXIDE FILMS	)	

MAIL STOP AMENDMENT
Commissioner for Patents
P.O. Box 1450
Alexandria, VA 22313-1450

Sir:

AMENDMENT AND RESPONSE TO OFFICE ACTION

In reply to the Office Action mailed March 25, 2005, the period of response extended to July 25, 2005, by a one month extension of time and authorization for the Commissioner to charge the fee of $120.00 to Deposit Account No. 06-0916, please amend the above-identified application as follows:

Amendments to the Claims are reflected in the listing of claims that begins on page 2 of this paper.

Remarks/Arguments follow the amendment sections on page 9 of this paper.

AMENDMENTS TO THE CLAIMS:

This listing of claims will replace all prior versions and listings of claims in the application:

Claims 1-39 (Canceled).

Claim 40 (Canceled).

Claim 41 (Currently amended): The method of ~~claim~~ claims ~~40~~ 59, 60, or 85, wherein the target is a metallic target and the process gas includes oxygen.

Claim 42 (Currently amended): The method of ~~claim~~ claims ~~40~~ 59, 60, or 85, wherein the target is a metallic target and the process gas includes one or more of a set consisting of N_2, NH_3, CO, NO, CO_2, halide containing gasses.

Claim 43 (Currently amended): The method of ~~claim~~ claims ~~40~~ 59, 60, or 85, wherein the target is a ceramic target.

Claim 44 (Canceled):

Claim 45 (Currently amended): The method of ~~claim~~ claims ~~40~~ 59, 60, or 85, wherein the magnetic field is provided by a moving magnetron.

Claim 46 (Currently amended) The method of ~~Claim~~ claims ~~40~~ 59, 60, or 85, further including holding the temperature of the substrate substantially constant.

Claim 47 (Currently amended): The method of ~~Claim~~ claims ~~40~~ 59, 60, or 85, wherein the process gas includes a mixture of Oxygen and Argon.

Claim 48 (Currently amended): The method of ~~Claim~~ claims ~~40~~ 59, 60, or 85, wherein the Oxygen flow is adjusted to adjust the index of refraction of the film.

Claim 49 (Currently amended): The method of ~~Claim~~ claims ~~40~~ 59, 60, or 85, wherein the process gas further includes nitrogen.

Claim 50 (Currently amended): The method of ~~Claim~~ claims ~~40~~ 59, 60, or 85, wherein providing pulsed DC power to a target includes providing pulsed DC power to a target which has an area larger than that of the substrate.

Claim 51 (Currently amended): The method of ~~Claim~~ claims ~~40~~ 59, 60, or 85, further including uniformly sweeping the target with a magnetic field.

Claim 52 (Currently amended): The method of ~~Claim~~ claim 51 wherein uniformly sweeping the target with a magnetic field includes sweeping a magnet in one direction across the target where the magnet extends beyond the target in the opposite direction.

Claim 53 (Currently amended): The method of ~~Claim~~ claims ~~40~~ 59, 60, or 85, wherein the target is an alloyed target.

Claim 54 (Currently amended): The method of ~~Claim~~ claim 53 wherein the alloyed target includes one or more rare-earth ions.

Claim 55 (Currently amended): The method of ~~Claim~~ claim 53 wherein the alloyed target includes Si and Al.

Claim 56 (Currently amended): The method of ~~Claim~~ claim 53 wherein the alloyed target includes one or more elements taken from a set consisting of Si, Al, Er, Yb, Zn, Ga, Ge, P, As, Sn, Sb, Pb, Ag, Au, Ce, Pr, Nd, Pm, Sm, Eu, Gd, Tb, Dy Ho, Tm, and Lu.

Claim 57 (Previously presented): The method of claim 53 wherein the alloyed target is a tiled target.

Claim 58 (Previously presented): The method of claim 57 wherein each tile of the tiled target is formed by prealloy atomization and hot isostatic pressing of a powder.

Claim 59 (Currently Amended): A method of depositing a film on a substrate, comprising:

providing a process gas between a target and a substrate;

providing pulsed DC power to the target;

providing a magnetic field to the target; and

wherein a material is deposited on the substrate, and ~~The method of claim 40, wherein the~~an oxide film is formed by reactive sputtering in metallic mode.

Claim 60 (Currently Amended): A method of depositing a film on a substrate, comprising:

providing a process gas between a target and a substrate;

providing pulsed DC power to the target;

providing a magnetic field to the target; and

wherein a material is deposited on the substrate, and ~~The method of claim 40, wherein the~~an oxide film is formed by reactive sputtering in poison mode.

Claim 61 (Currently Amended): A method of depositing a film on a substrate, comprising:

providing a process gas between a metallic target and a substrate;

providing pulsed DC power to the target;

providing a magnetic field to the target; and

~~The method of claim 40, further including~~ reconditioning ~~the~~ a metallic target~~.~~;

wherein a material is deposited on the substrate.

Claim 62 (Previously presented): The method of claim 61, wherein reconditioning the metallic target includes:

reactive sputtering in the metallic mode and then reactive sputtering in the poison mode.

Claim 63 (Canceled).

Claim 64 (Currently amended): The ~~method~~ reactor of claim ~~63~~ 82, 83, or 86, wherein the target is a metallic target and the process gas includes oxygen.

Claim 65 (Currently amended): The ~~method~~ reactor of claim ~~63~~ 82, 83, or 86, wherein the target is a metallic target and the process gas includes one or more of a set consisting of N_2, NH_3, CO, NO, CO_2, halide containing gasses.

Claim 66 (Currently amended): The ~~method~~ reactor of claim ~~63~~ 82, 83, or 86, wherein the target is a ceramic target.

Claim 67 (Canceled)

Claim 68 (Currently amended): The ~~method~~ reactor of claim ~~63~~ 82, 83, or 86, wherein the magnetic field is provided by a moving magnetron.

Claim 69 (Currently amended) The ~~method~~ reactor of ~~Claim~~ claims ~~63~~ 82, 83, or 86, further including a temperature controller for holding the temperature of the substrate substantially constant.

Claim 70 (Currently amended): The ~~method~~ reactor of ~~Claim~~ claims ~~63~~ 82, 83, or 86, wherein the process gas includes a mixture of Oxygen and Argon.

Claim 71 (Currently amended): The ~~method~~ reactor of ~~Claim~~ claims ~~63~~ 82, 83, or 86, further including a process gas flow controller wherein the Oxygen flow is adjusted to adjust the index of refraction of the film.

Claim 72 (Currently amended): The ~~method~~ reactor of ~~Claim~~ claims ~~63~~ 82, 83, or 86, wherein the process gas further includes nitrogen.

Claim 73 (Currently amended): The ~~method~~ reactor of ~~Claim~~ claims ~~63~~ 82, 83, or 86,

wherein the target has an area larger than that of the substrate.

Claim 74 (Currently amended): The ~~method~~ reactor of ~~Claim~~ claims ~~63~~ 82, 83, or 86, wherein the magnetic field generator uniformly sweeps the target with the magnetic field.

Claim 75 (Currently amended): The ~~method~~ reactor of ~~Claim~~ claims 74 wherein when the magnet field is swept in one direction across the target, the magnet field extends beyond the target in the opposite direction.

Claim 76 (Currently amended): The ~~method~~ reactor of ~~Claim~~ claims ~~63~~ 82, 83, or 86, wherein the target is an alloyed target.

Claim 77 (Currently amended): The ~~method~~ reactor of ~~Claim~~ claim 76 wherein the alloyed target includes one or more rare-earth ions.

Claim 78 (Currently amended): The ~~method~~ reactor of ~~Claim~~ claim 76 wherein the alloyed target includes Si and Al.

Claim 79 (Currently amended): The ~~method~~ reactor of ~~Claim~~ claim 76 wherein the alloyed target includes one or more elements taken from a set consisting of Si, Al, Er, Yb, Zn, Ga, Ge, P, As, Sn, Sb, Pb, Ag, Au, Ce, Pr, Nd, Pm, Sm, Eu, Gd, Tb, Dy Ho, Tm, and Lu.

Claim 80 (Currently amended): The ~~method~~ reactor of claim 76 wherein the alloyed target is a tiled target.

Claim 81 (Currently amended): The ~~method~~ reactor of claim 80 wherein each tile of the tiled target is formed by prealloy atomization and hot isostatic pressing of a powder.

Claim 82 (Currently Amended): A reactor, comprising:

a target area for receiving a target;

a magnetic field generator supplying a magnetic field to the target;

a substrate area opposite the target area for receiving a substrate; and

a pulsed DC power supply coupled to the target,

wherein a material is deposited on the substrate when pulsed DC power from the pulsed DC power supply is applied to the target in the presence of a process gas and~~The method of claim 63, wherein~~ the material is an oxide film formed by reactive sputtering in metallic mode.

Claim 83 (Currently Amended): A reactor, comprising:

a target area for receiving a target;

a magnetic field generator supplying a magnetic field to the target;

a substrate area opposite the target area for receiving a substrate; and

a pulsed DC power supply coupled to the target,

wherein a material is deposited on the substrate when pulsed DC power from the pulsed DC power supply is applied to the target in the presence of a process gas and ~~The method of claim 63, wherein~~ the material is an oxide film formed by reactive sputtering in poison mode.

Claim 84 (Currently Amended): A reactor, comprising:

a target area for receiving a target;

a magnetic field generator supplying a magnetic field to the target;

a substrate area opposite the target area for receiving a substrate; and

a pulsed DC power supply coupled to the target,

wherein a material is deposited on the substrate when pulsed DC power from the pulsed DC power supply is applied to the target in the presence of a process gas and~~The method of claim 63, wherein~~ the target is reconditioned.

Claim 85 (New): A method of depositing a film on a substrate, comprising:

providing a process gas between a target and a substrate;

providing pulsed DC power to the target;

providing a magnetic field to the target; and

wherein a material is deposited on the substrate, and an oxide film is formed by reactive sputtering in transition mode.

Claim 86 (New) A reactor, comprising:

a target area for receiving a target;

a magnetic field generator supplying a magnetic field to the target;

a substrate area opposite the target area for receiving a substrate; and

a pulsed DC power supply coupled to the target,

wherein a material is deposited on the substrate when pulsed DC power from the pulsed DC power supply is applied to the target in the presence of a process gas and the material is an oxide film formed by reactive sputtering in transition mode.

Claim 87 (New): The method according to claims 59, 60, or 85, further comprising:

providing a narrow-band RF filter between the pulsed DC power supply and the target; and

providing an RF bias to the substrate.

Claim 88 (New): The method according to claim 87, wherein the narrow-band RF filter has a bandwidth of about 100 kHz.

Claim 89 (New): The method according to claim 87, wherein the RF bias has a frequency of about 2 MHz.

Claim 90 (New): The reactor according to claims 82, 83, or 86, further comprising:

an RF power supply coupled to the substrate to provide an RF bias; and

a RF filter coupled between the pulsed DC power supply and the target.

Claim 91 (New): The reactor according to claim 90, wherein the RF filter has a narrow bandwidth of about 100 kHz.

Claim 92 (New): The reactor according to claim 90, wherein the RF power supply provides RF power at about 2 MHz.

REMARKS

Claims 40-84 are pending in the above identified application. The Examiner has rejected claims 40-58 and 63-81 and objected to claims 59-62 and 82-84. In this Amendment, claims 40, 44,63, and 67 have been canceled, without prejudice or disclaimer. Claims 41-43, 45-66, and 68-84 have been amended. New claims 85-92 have been added.

Claim Objections

The Examiner objected to claims 40 and 59-61 in order to correct typographical errors. In response, Applicants amend the claims to correct these typographical errors. Claim 40 has been canceled from this application. Claims 59 and 60 have been amended so that "the oxide" is replaced with "an oxide." Claim 61 has been amended so that "the metallic" is replaced with "a metallic." Therefore, Applicants request that the Examiner remove the objections to the claims.

Claim Rejections under 35 U.S.C. § 102

The Examiner has rejected claims 40, 44, 45, 47, 49, 51, 52, 63, 67, 68, 70, 72, 74, and 75 under 35 U.S.C. 102(b) as being anticipated by Smolanoff et al. (U.S. Patent No. 6,117,279; hereafter "Smolanoff"). Without acquiescing to any of the Examiner's comments regarding the prior art or comparisons of the teachings of the prior art with the claimed invention, Applicants has amended the application to include only claims that are currently allowed by the Examiner and claims that depend from those allowed claims. Applicants reserve the right to pursue the originally filed claims in a separate application.

Claims 40, 44, 63, and 67 have been canceled.

Claims 47, 49, and 51-52 have been amended to depend, directly or indirectly, from claims 59, 60, and 85. Claims 59 and 60 have been allowed by the Examiner. Claim 85, although a newly added claim, is allowable as is discussed below.

Claims 68, 70, 72, and 74-75 have been amended to depend, directly or indirectly, from claims 82, 83, or 86. Claims 82 and 83 have been allowed by the Examiner. Claim 86, although a newly added claim, is allowable as is discussed below.

Therefore, claims 45, 47, 49, 51, 52, 68, 70, 72, 74, and 75 are currently allowable.

Claim Rejections under 35 U.S.C. § 103

Applicants respectfully traverse the rejection of claims 41, 42, 46, 48, 50, 64, 65, 69, 71, and 73 under 35 U.S.C. §103(a) as allegedly being unpatentable over Smolanoff in view of Chen et al. (U.S. Publication No. 2004/0077161; hereafter "Chen").

Claims 41, 42, 46, 48, and 50 have been amended to depend from claims 59 or 60, which have been allowed by the Examiner, or claim 85, which is allowable as discussed below. Claims 64, 65, 69, 71, and 73 have been amended to depend from claims 82 or 83, which have been amended by the Examiner, or claim 86, which is allowable as is discussed below. Therefore, claims 41, 42, 46, 48, 50, 64, 65, 69, and 71, as amended, are allowable. Applicants do not acquiesce in the Examiner's characterization of the claims or prior art and reserve the right to pursue the claims in their original scope in a separate application.

The Examiner has rejected claims 43, 53-58, 66, and 76-81 under 35 U.S.C. §103(a) as allegedly being unpatentable over Smolanoff in view of Milonopoulou et al. (U.S. Publication No. 2003/0175142; hereafter "Milonopoulou").

Claims 43 and 53-58 have been amended to depend, directly or indirectly, from claims 59 or 60, which have been allowed by the Examiner, or claim 85, which is allowable as discussed below. Claims 66 and 76-81 depend, directly or indirectly, from claims 82 or 83, which have been allowed by the Examiner, or claim 86, which is allowable as discussed below. Therefore, claims 43, 53-58, 66, and 76-81, as amended, are allowable. Applicants do not acquiesce in the Examiner's characterization of the claims or prior art and reserve the right to pursue the claims in their original scope in a separate application.

Allowable Subject Matter

Applicants thanks the Examiner for indicating that claims 59-62 and 82-84 would be allowable if they included the features of the claims 40 and 63, respectively. Applicants has amended claims 59-62 and 82-84 to be in independent form and to include the features of the claims 40 and 63. Therefore, as indicated by the Examiner, claims 59-62 and 82-84 are allowable over the prior art.

New Claims

New claims 85-91 have been added. Claims 85 and 86 are independent claims similar in scope to allowed claims 59 and 82, respectively, except that the new claims claim the transition mode operating region instead of the metallic mode or poison mode regions. Such operation is discussed in the specification, for example, in paragraph [0114]. Claims 85 and 86 are allowable over the prior art for at least the same reasons as is claims 59 and 82.

The subject matter of claims 87 and 90 is shown, for example, in Figure 1A and discussed, for example, in paragraph [0050].

The subject matter of claims 88-89 and 91 is discussed, for example, in paragraph [0054].

Conclusion

In view of the foregoing amendments and remarks, Applicants respectfully requests reconsideration and reexamination of this application and the timely allowance of the pending claims.

Please grant any extensions of time required to enter this response and charge any additional required fees to Deposit Account No. 06-0916.

Respectfully submitted,

FINNEGAN, HENDERSON, FARABOW,
GARRETT & DUNNER, L.L.P.

Date: July 25, 2005

By: _____
Gary J. Edwards
Reg. No. 41,008

EXPRESS MAIL LABEL NO.
EV 727732357 US

PATENT
Customer No. 22,852
Attorney Docket No. 9140.0016-01

IN THE UNITED STATES PATENT AND TRADEMARK OFFICE

In re Application of:	)
	)
ZHANG, Hongmei et al.	) Group Art Unit: 2823
	)
Application No.: 10/954,182	) Examiner: ESTRADA, Michelle
	)
Filed: October 1, 2004	)
	) Confirmation No.: 9873
For: BIASED PULSE DC REACTIVE SPUTTERING OF OXIDE FILMS	)

MAIL STOP AMENDMENT
Commissioner for Patents
P.O. Box 1450
Alexandria, VA 22313-1450

Sir:

PETITION FOR EXTENSION OF TIME

Applicants petition for a one month extension of time to reply to the Office action of March 25, 2005. The Commissioner is hereby authorized to charge the fee of $120.00 to Deposit Account No. 06-0916.

Please grant any extensions of time required to enter this response and charge any additional required fees to our deposit account 06-0916.

Respectfully submitted,

FINNEGAN, HENDERSON, FARABOW, GARRETT & DUNNER, L.L.P.

By: Gary J. Edwards
Gary J. Edwards
Reg. No. 41,008

07/28/2005 SSITHIB1 00000114 060916 10954182
01 FC:1251 120.00 DA

Dated: July 25, 2005

Express Mail Label No. EV 727732357 US

PATENT
Customer No. 22,852
Attorney Docket No. 9140.0016-01

IN THE UNITED STATES PATENT AND TRADEMARK OFFICE

In re Application of:	
ZHANG, Hongmei et al.	Group Art Unit: 2823
Application No.: 10/954,182	Examiner: ESTRADA, Michelle
Filed: October 1, 2004	Confirmation No.: 9873
For: BIASED PULSE DC REACTIVE SPUTTERING OF OXIDE FILMS	

MAIL STOP AMENDMENT
Commissioner for Patents
P.O. Box 1450
Alexandria, VA 22313-1450

Sir:

SECOND SUPPLEMENTAL INFORMATION DISCLOSURE STATEMENT UNDER 37 C.F.R. § 1.97(c)

Pursuant to 37 C.F.R. §§ 1.56 and 1.97(c), applicants bring to the attention of the Examiner the documents on the attached listing. This Information Disclosure Statement is being filed after the events recited in Section 1.97(b) but, to the undersigned's knowledge, before the mailing date of either a Final action, Quayle action, or a Notice of Allowance. Under the provisions of 37 C.F.R. § 1.97(c), the Commissioner is hereby authorized to charge the fee of $180.00 to Deposit Account No. 06-0916 as specified by Section 1.17(p).

Copies of the listed foreign and non-patent literature documents are attached. Copies of the U.S. patents and patent publications are not enclosed.

Applicant respectfully requests that the Examiner consider the listed documents and indicate that they were considered by making appropriate notations on the attached form.

This submission does not represent that a search has been made or that no better art exists and does not constitute an admission that each or all of the listed documents are material or constitute "prior art." If the Examiner applies any of the documents as prior art against any claims in the application and applicants determine that the cited documents do not constitute "prior art" under United States law, applicants reserve the right to present to the office the relevant facts and law regarding the appropriate status of such documents.

Applicants further reserve the right to take appropriate action to establish the patentability of the disclosed invention over the listed documents, should one or more of the documents be applied against the claims of the present application.

If there is any fee due in connection with the filing of this Statement, please charge the fee to our Deposit Account No. 06-0916.

Respectfully submitted,

FINNEGAN, HENDERSON, FARABOW,
GARRETT & DUNNER, L.L.P.

Dated: July 25, 2005

By: Gary J. Edwards
Reg. No. 41,008

Express Mail Label No.
EV 727732357 US

EXPRESS MAIL NO. EV 727732357 US

IDS Form PTO/SB/08: Substitute for Form 1449A/PTO

INFORMATION DISCLOSURE STATEMENT BY APPLICANT

(Use as many sheets as necessary)

Sheet	1	of	2

Complete if Known	
Application Number	10/954,182
Filing Date	October 1, 2004
First Named Inventor	ZHANG, Hongmei
Art Unit	2823
Examiner Name	ESTRADA, Michelle
Attorney Docket Number	9140.0016-01

U.S. PATENTS AND PUBLISHED U.S. PATENT APPLICATIONS

Examiner Initials*	Cite No.[1]	Document Number Number-Kind Code[2] *(if known)*	Issue or Publication Date MM-DD-YYYY	Name of Patentee or Applicant of Cited Document	Pages, Columns, Lines, Where Relevant Passages or Relevant Figures Appear
		US 2003/0141186 A1	07-31- 2003	Wang et al.	
		US 2001/041460 A1	11-15-2001	Wiggins	
		US 2001/0027159 A1	10-04-2001	Kaneyoshi	
		US 6,232,242	05-15-2001	Hata et al.	
		US 6,117,279	09-12-2000	Smolanoff et al.	
		US 5,738,731 (09-00)	04-04-1998	Shindo	
		US 5,538,796	07-23-1996	Schaffer	
		US 5,309,302	03-14-1967	Heil	
		US 5,296,089	03-22-1994	Chen et al.	
		US 5,173,271	12-22-1992	Chen et al.	
		US 4,587,225	05-06-1986	Tsukuma et al.	
		RE 32,449	06-30-1987	Claussen	

Note: Submission of copies of U.S. Patents and published U.S. Patent Applications is not required.

FOREIGN PATENT DOCUMENTS

Examiner Initials*	Cite No.[1]	Foreign Patent Document Country Code[3] Number[4] Kind Code[5] *(if known)*	Publication Date MM-DD-YYYY	Name of Patentee or Applicant of Cited Document	Pages, Columns, Lines, Where Relevant Passages or Relevant Figures Appear	Translation[6]
		EP 1 092 689 A1	04-18-2001	BPS Alzenau GmbH		
		EP 1068899 A1	01-17-2001	Nippon Sheet Glass Co., Ltd.		
		EP 0 639 655 A1	02-22-1995	Asahi Glass Co, Ltd.		
		EP 0 652 308 A2	10-13-1994	Mega Chips Corp.		
		JP 7-233469	09-05-1995	Asahi Glass Co, Ltd.		
		WO 00/21898 A1	04/20/2000	Samsung Electronics Co.		

Examiner Signature		Date Considered	

EXAMINER: Initial if reference considered, whether or not citation is in conformance with MPEP 609. Draw line through citation if not in conformance and not considered. Include copy of this form with next communication to applicant.

EXPRESS MAIL NO. EV 727732357 US

IDS Form PTO/SB/08: Substitute for form 1449A/PTO				Complete if Known	
INFORMATION DISCLOSURE STATEMENT BY APPLICANT				*Application Number*	10/954,182
				Filing Date	October 1, 2004
				First Named Inventor	ZHANG, Hongmei
				Art Unit	2823
(Use as many sheets as necessary)				*Examiner Name*	ESTRADA, Michelle
Sheet	2	of	2	*Attorney Docket Number*	9140.0016-01

NON PATENT LITERATURE DOCUMENTS			
Examiner Initials*	Cite No.[1]	Include name of the author (in CAPITAL LETTERS), title of the article (when appropriate), title of the item (book, magazine, journal, serial, symposium, catalog, etc.), date, page(s), volume-issue number(s), publisher, city and/or country where published.	Translation[6]
		Crowder, et al., "Low-Temperature Single-Crystal Si TFT's Fabricated on Si Films Processed via Sequential Lateral Solidification," IEEE, vol. 19, no. 8 (August 1998), pages 306-308.	
		Greene et al., "Morphological and electrical properties of rf sputtered Y203-doped Zr02 thin films," J. Vac. Sci. Tecnol., vol. 13, no. 1 (Jan/Feb 1976), pages 72-75.	
		Hwang, Man-Soo et al., "The effect of pulsed magnetron sputtering on the properties of indium tin oxide thin films," Elsevier Science B.V., P. 29-33, (2003).	
		Im, et al. "Controlled Super-lateral Growth of Si Films for Microstructural Manipulation and Optimization," Materials Science Program (1998), pages. 603-617.	
		Im, et al., "Crystalline Si Films for Integrated Active-Matrix LiquidCrystal Displays," MrS Bulletin (March 1996), pages. 39-48.	
		Im, et al., "Single-crystal Si films for thin-film transistor devices," American Institute of Physics (1997), pages. 3434-3436.	
		Tukamoto, H. et al., "Electronic Conductivity of $LiCoO_s$ and Its Enhancement by Magnesium Doping," J. Electrochem. Soc., vol. 44, no. 9, pages 3164-3168 (September 1997).	
		Response to Office Action filed on March 14, 2005 in U.S. Serial No. 10/291,179 (Attorney Docket No. 09140-0001-00).	
		Office Action issued on June 15, 2005 in U.S. Serial No. 10/291,179 (Attorney Docket No. 09140-0001-00).	
		Office Action issued on March 17, 2005 in U.S. Serial No. 09/903,081 (Attorney Docket No. 09140-0014-00).	
		Response to Office Action filed on June 17, 2005 in U.S. Serial No. 09/903,081 (Attorney Docket No. 09140-0014-00).	
		Office Action issued on July 8, 2005 in U.S. Serial No. 09/903,081 (Attorney Docket No. 09140-0014-00).	
		Office Action dated January 13, 2005, received in Application No. 10/101,863 (Attorney Docket No. 09140.0016-00).	
		Response to office Action filed on June 10, 2005 in U.S. Serial No. 10/101,863 (Attorney Docket No. 09140.0016-00).	
		Office Action issued on March 14, 2005 in U.S. Serial No. 10/789,953 (Attorney Docket No. 09140-0030-00).	
		Office Action issued March 24, 2005 in U.S. Application No. 10/851,542 (Attorney Docket No. 09140.0033-00).	

Examiner Signature		Date Considered	

EXAMINER: Initial if reference considered, whether or not citation is in conformance with MPEP 609. Draw line through citation if not in conformance and not considered. Include copy of this form with next communication to applicant.

(19) Europäisches Patentamt
European Patent Office
Office européen des brevets

(11) Publication number: **0 652 308 A2**

(12) **EUROPEAN PATENT APPLICATION**

(21) Application number: **94116188.7**

(51) Int. Cl.[6]: **C30B 23/02**

(22) Date of filing: **13.10.94**

(30) Priority: **14.10.93 JP 281748/93**
20.10.93 JP 285674/93
10.12.93 JP 341281/93
29.03.94 JP 58887/94

(43) Date of publication of application:
10.05.95 Bulletin 95/19

(84) Designated Contracting States:
DE FR GB NL

(71) Applicant: **NEURALSYSTEMS CORPORATION**
Minamisawa Bldg.,
21-8, Ichigayasanai-cho,
Shinjuku-ku
Tokyo-to (JP)
Applicant: **MEGA CHIPS CORPORATION**
1-12-38, Esaka-cho
Suita-shi,
Osaka-fu (JP)

(72) Inventor: **Asakawa, Toshifumi**
6-9-25, Tsukimino
Yamato-shi,
Kanagawa-ken (JP)
Inventor: **Shindo, Masahiro, c/o Mega Chips Corporation**
1-12-38, Esaka-cho
Suita-shi,
Osaka-fu (JP)
Inventor: **Yoshimizu, Toshikazu, c/o Mega Chips Corporation**
1-12-38, Esaka-cho
Suita-shi,
Osaka-fu (JP)
Inventor: **Ueyama, Sumiyoshi, c/o Mega Chips Corporation**
1-12-38, Esaka-cho
Suita-shi,
Osaka-fu (JP)

(74) Representative: **KUHNEN, WACKER & PARTNER**
Alois-Steinecker-Strasse 22
D-85354 Freising (DE)

(54) **Method of and apparatus for forming single-crystalline thin film.**

(57) In order to form a single-crystalline thin film on a polycrystalline substrate using plasma CVD, a downwardly directed mainly neutral Ne atom current is formed by an ECR ion generator (2). A reaction gas such as silane gas which is supplied from a reaction gas inlet pipe (13) is sprayed onto an SiO_2 substrate (11) by an action of the Ne atom current, so that an amorphous Si thin film is grown on the substrate (11) by a plasma CVD reaction. At the same time, a part of the Ne atom current having high directivity is directly incident upon the substrate (11), while another part thereof is incident upon the substrate (11) after its course is bent by a reflector (12). The reflector (12) is so set that all directions of the parts of the Ne atom current which are incident upon the substrate (11) are perpendicular to densest planes of single-crystalline Si. Therefore, the as-grown amorphous Si is sequentially converted to a single-crystalline Si thin film having crystal axes which are so regulated that the densest planes are oriented perpendicularly to the respective directions of incidence, by an action of the law of Bravais. Thus, a single-crystalline thin film is formed on a polycrystalline substrate.

EP 0 652 308 A2

FIG. 13

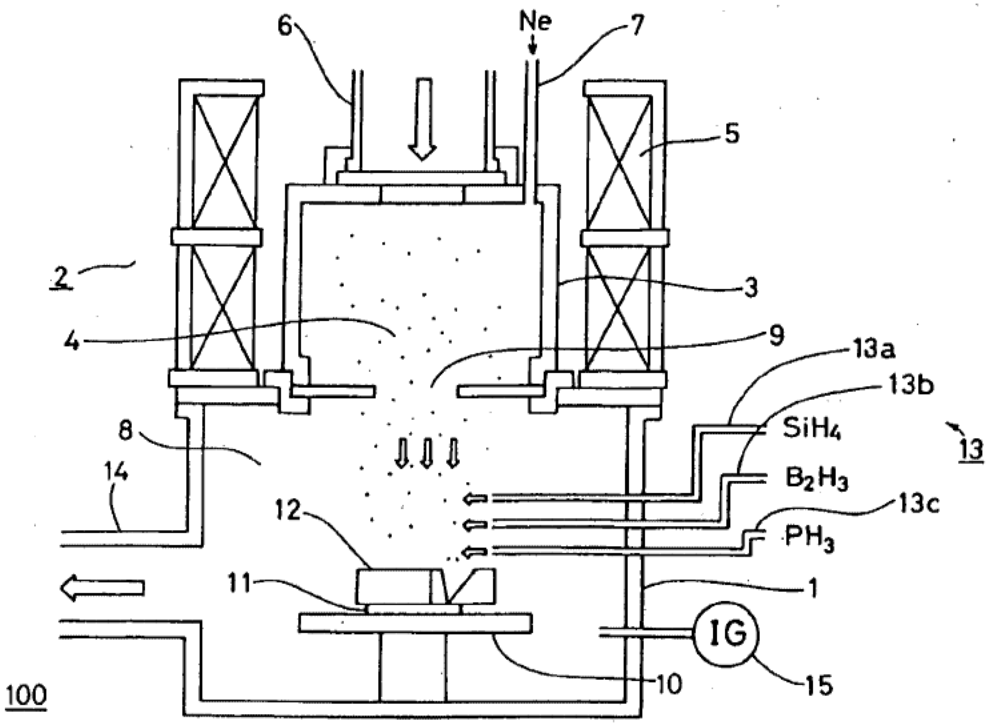

BACKGROUND OF THE INVENTION

Field of the Invention

The present invention relates to a method of and an apparatus for forming a single-crystalline thin film on a substrate, i.e., an arbitrary medium, and it relates to a method of and an apparatus for forming a single-crystalline thin film, which implement selective and efficient formation of a single-crystalline thin film, and it also relates to a beam irradiator, a beam irradiating method, and a beam reflecting device for enabling efficient formation of a single-crystalline thin film or an axially oriented polycrystalline thin film on a substrate.

Background of the Invention

Plasma chemical vapor deposition (plasma CVD) is a sort of chemical vapor deposition process (CVD), which is adapted to bring a reaction gas into a plasma state for forming active radicals and ions and to cause a chemical reaction under active environment, thereby forming a thin film of a prescribed material on a substrate under a relatively low temperature. The plasma CVD, which can form various types of films under low temperatures, has such advantages that it is possible to form an amorphous film while preventing crystallization, to employ a non-heat-resistant substrate such as a plastic substrate, and to prevent the as-formed film from a reaction with the substrate. Therefore, the application range of the plasma CVD is increasingly widened particularly in relation to semiconductor industry.

It is possible to epitaxially form a single-crystalline thin film of a prescribed material on a single-crystalline substrate by carrying out the plasma CVD under a temperature facilitating crystallization.

Generally, in order to form a single-crystalline thin film of a prescribed material on a single-crystalline substrate of the same material having the same crystal orientation, it is possible to employ an epitaxial growth process. In the epitaxial growth process, however, it is impossible to form a single-crystalline thin film on a polycrystalline substrate or an amorphous substrate. Therefore, in order to form a single-crystalline thin film on a substrate having a different crystal structure such as an amorphous substrate or a polycrystalline substrate, or a substrate of a different material, an amorphous thin film or a polycrystalline thin film is temporarily formed on the substrate so that the same is thereafter converted to a single-crystalline thin film.

In general, a polycrystalline or amorphous semiconductor thin film is single-crystallized by fusion recrystallization or lateral solid phase epitaxy.

However, such a process has the following problems: In the fusion recrystallization, the substrate is extremely thermally distorted when the thin film is prepared from a material having a high melting point, to damage physical and electrical properties of the thin film as employed. Further, an electron beam or a laser beam is employed for fusing the thin film. Therefore, it is necessary to scan spots of the electron beam or the laser beam along the overall surface of the substrate, and hence a long time and a high cost are required for recrystallization.

On the other hand, the lateral solid phase epitaxy is easily influenced by a method of crystallizing the material forming the substrate, while the growth rate is disadvantageously slow in this process. In order to grow a single-crystalline thin film over a distance of about 10 μm, for example, this process requires at least 10 hours. Further, it is difficult to obtain a large crystal grain since a lattice defect is caused to stop growth of the single crystal upon progress of the growth to some extent.

In each process, further, it is necessary to bring a seed crystal into contact with the polycrystalline or amorphous thin film. In addition, the single crystal is grown in a direction along the major surface of the thin film, i.e., in a lateral direction, whereby the distance of growth to the crystal is so increased that various hindrances take place during the growth of the single crystal. When the substrate is made of an amorphous material such as glass, for example, the substrate has no regularity in lattice position and this irregularity influences on growth of the single crystal to disadvantageously result in growth of a polycrystalline film having large crystal grain sizes. In addition, it is difficult to selectively form a single-crystalline thin film having a prescribed crystal orientation on an arbitrary region of the substrate, due to the lateral growth.

In order to solve the aforementioned problems of the prior art, there has been made an attempt for reducing the growth distance by utilizing vertical growth of the thin film, thereby reducing the growth time. In other words, there has been tried a method of bringing a seed crystal into contact with the overall surface of a polycrystalline or amorphous thin film for making solid phase epitaxial growth in a direction perpendicular to the major surface of the thin film, i.e., in the vertical direction. As the result, however, the seed crystal was merely partially in contact with the amorphous thin film or the like and it was impossible to

form a single-crystalline thin film by the as-expected vertical solid phase epitaxial growth, since only lateral epitaxial growth was caused from the contact portion. According to this method, further, the seed crystal adhered to the as-grown single-crystalline film and it was extremely difficult to separate the former from the latter, such that the as-grown thin film was disadvantageously separated from the substrate following the seed crystal. Further, it is impossible in practice to selectively form a single-crystalline thin film having a prescribed crystal orientation on an arbitrary region of the substrate, since it is necessary to accurately arrange a seed crystal of a prescribed shape on a prescribed position.

When the substrate itself has a single-crystalline structure, it is impossible to form a single-crystalline thin film having a crystal orientation which is different from that of the substrate on the substrate by any conventional means. This also applies to a polycrystalline thin film having single crystal axes which are regulated along the same direction between crystal grains, i.e., an axially oriented polycrystalline thin film. In other words, it is difficult to form an axially oriented polycrystalline thin film which is oriented in a desired direction on an arbitrary substrate by the prior art.

SUMMARY OF THE INVENTION

The inventor has found that, when a physical seed crystal is employed in vertical growth of solid phase epitaxy, it is difficult to separate a single-crystalline thin film as grown from the seed crystal due to adhesion therebetween, and that this problem can be solved when a virtual seed crystal of a large area is employed in place of the physical seed crystal to obtain a virtual seed crystal for attaining the same effect as a seed crystal adhering to the overall surface of a single crystal in an excellent state with no physical adhesion on the surface of the single crystal in termination of the crystal growth. The present invention is based on this basic idea.

According to the present invention, a method of forming a single-crystalline thin film is adapted to form a single-crystalline thin film of a prescribed material on a substrate by previously forming an amorphous thin film or a polycrystalline thin film of the prescribed material on the substrate and irradiating the amorphous thin film or the polycrystalline thin film with beams of neutral atoms or neutral molecules of low energy levels causing no sputtering of the prescribed material under a high temperature of not more than a crystallization temperature of the prescribed material from directions which are perpendicular to a plurality of densest crystal planes, having different directions, in the single-crystalline thin film to be formed.

The thin film is at a high temperature below a crystallization temperature, whereby the single crystal which is formed in the vicinity of the surface serves as a seed crystal, so that a single crystal is grown toward a deep portion by vertical solid phase epitaxial growth to single-crystallize the overall region of the thin film along its thickness. When the thin film is at a temperature exceeding the crystallization temperature, the as-formed single crystal is converted to a polycrystalline structure which is in a thermal equilibrium state. On the other hand, no crystallization toward a deep portion progresses at a temperature which is extremely lower than the crystallization temperature. Therefore, the temperature of the thin film is adjusted to be at a high level below the crystallization temperature, such as a level immediately under the crystallization temperature.

The seed crystal, which is formed by conversion from the amorphous thin film or the polycrystalline thin film, is integral with an amorphous thin film or the polycrystalline layer remaining in the deep portion. Namely, this layer is completely in contact with the seed crystal. Therefore, vertical solid phase epitaxial growth progresses in an excellent state. Further, the seed crystal and the single crystal formed by solid epitaxial growth are made of the same material having the same crystal orientation, whereby it is not necessary to remove the seed crystal after formation of the single-crystalline thin film. Further, the single-crystalline thin film, which is formed by vertical solid phase epitaxial growth, can be efficiently obtained in a desired state in a short time.

In the method according to the present invention, it is possible to form a single-crystalline thin film on a substrate including a polycrystalline substrate or an amorphous substrate, while it is not necessary to increase the temperature of the substrate to an extremely high level. Therefore, it is possible to easily obtain a single-crystalline thin film such as a wide-use semiconductor thin film which is applied to a thin film transistor of liquid crystal display or a single-crystalline thin film which is applied to a three-dimensional LSI. While a well-known metal evaporation film is inferior in quality due to a number of vacancies such that a migration phenomenon takes place to easily cause disconnection when the same is applied to interconnection of an electronic circuit, it is possible to prevent such a problem according to the present invention.

Preferably, the atomic weights of atoms forming the beams are lower than the maximum one of the atomic weights of elements forming the prescribed material.

The atomic weights of atoms forming the beams which are applied to the thin film or atoms forming molecules are lower than the maximum one of the atomic weights of elements forming the thin film, whereby most parts of the atoms forming the as-applied beams are rearwardly scattered on the surface of the thin film or in the vicinity thereof, to hardly remain in the thin film. Thus, electronic/physical properties of the thin film are hardly changed by residual of such atoms in the single-crystalline thin film.

Preferably, the beams are obtained by a single electron cyclotron resonance type ion generation source and a reflector which is arranged in a path between the ion generation source and the amorphous thin film or the polycrystalline thin film.

The beams which are applied to the thin film are obtained by a single beam source and a reflector which is arranged in a path, whereby it is possible to irradiated the substrate with the beams from a plurality of prescribed directions which are different from each other with no requirement for a plurality of beam sources. Namely, only a single beam source having a complicated structure is sufficient in the method according to the present invention, whereby a single-crystalline thin film can be formed with a simple apparatus structure. Since only one beam source is sufficient, it is possible to form the thin film under a high vacuum. Further, the beam source is formed by an electron cyclotron resonance type ion generation source, whereby the ion beams have high directivity and it is possible to obtain strong neutral beams having excellent directivity at positions beyond prescribed distances from the ion source with no means for neutralizing ions.

In the method according to the present invention, an amorphous thin film or a polycrystalline thin film which is previously formed on a substrate surface is irradiated with beams of atoms or molecules from a plurality of directions. The beams are at energy levels causing no sputtering on the material as irradiated, whereby the law of Bravais acts such that a layer close to the surface of the amorphous thin film or the polycrystalline thin film is converted to a crystal having such a crystal orientation that planes perpendicular to the directions irradiated with the beams define densest crystal planes. The plurality of beams are applied from directions perpendicular to a plurality of densest crystal planes having different directions, whereby the orientation of the as-formed crystal is set in a single one. In other words, a single-crystalline thin film having a regulated crystal orientation is formed in the vicinity of a surface of the amorphous thin film or the polycrystalline thin film.

The inventor has also found that a single-crystalline thin film can be obtained by growing a thin film and converting the same to a single-crystalline simultaneously instead of previously forming a thin film. This invention is also based on this idea.

According to the present invention, a method of forming a single-crystalline thin film forms a single-crystalline thin film of a prescribed material on a polycrystalline substrate or an amorphous substrate using plasma chemical vapor deposition by supplying a reaction gas onto the substrate under a low temperature allowing no crystallization of the prescribed material with the plasma chemical vapor deposition alone while simultaneously irradiating the substrate with beams of a low energy gas causing no sputtering of the prescribed material from directions which are perpendicular to a plurality of densest crystal planes having different directions in the single-crystalline thin film to be formed.

In the method according to the present invention, a thin film of a prescribed material is formed on a substrate by plasma chemical vapor deposition, while the substrate is irradiated with beams of a gas from a plurality of directions. The gas beams are at energy levels causing no sputtering on the material as irradiated, whereby the law of Bravais acts such that the thin film of the prescribed material as being formed is sequentially converted to a crystal in such a crystal orientation that planes perpendicular to directions of the beams define densest crystal planes. The substrate is irradiated with a plurality of gas beams from directions perpendicular to a plurality of densest crystal planes having different directions, whereby the as-formed crystal has only one orientation. In other words, a single-crystalline thin film having a regulated crystal orientation is formed.

Under a temperature facilitating crystallization of a prescribed material by plasma chemical vapor deposition alone with no beam irradiation, crystal orientations are arbitrarily directed regardless of directions of beam irradiation and cannot be regulated, while a polycrystalline film is formed. Therefore, temperature control is performed to a low level for facilitating no crystallization with plasma chemical vapor deposition alone.

In the method according to the present invention, further, conversion to a single crystal simultaneously sequentially progresses in the process of growth of the thin film by plasma chemical vapor deposition. Thus, it is possible to form a single-crystalline thin film having a large thickness under a low temperature.

Preferably, the gas is an inert gas.

The substrate is irradiated with an inert gas, whereby atoms or ions which may remain in the as-formed thin film after irradiation exert no bad influence on electronic/physical properties of the single-crystalline thin

film as impurities.

Preferably, the atomic weight of an element forming the inert gas is lower than the maximum one of the atomic weights of elements forming the prescribed material.

The atomic weight of an element forming the inert gas is lower than the maximum atomic weight of elements forming the prescribed material which is grown as a thin film, whereby most parts of atoms or ions of the as-applied inert gas rearwardly recoil on the surface of the thin film or in the vicinity thereof, to hardly remain in the thin film.

Preferably, the prescribed material contains an element forming a gas material which is in a gas state under ordinary temperatures, and the beams of the gas are those of the gas material.

The gas as applied contains elements forming the material which is grown as the thin film. Even if atoms or ions of the elements remain after irradiation, therefore, the same exert no bad influence on the as-formed single-crystalline thin film as impurities. Further, it is also possible to supply the element to the thin film only by application of the gas beams without introducing the same into the reaction gas.

Preferably, the reaction gas contains a reaction gas material which is formed by an impurity element to be added to the prescribed material.

The reaction gas contains an impurity element to be added to the material which is grown as the thin film, whereby it is possible to form a p-type or n-type semiconductor single-crystalline thin film in formation of a semiconductor single-crystalline thin film, for example. In other words, it is possible to form a single-crystalline thin film containing a desired impurity.

Preferably, a plurality of types of impurity elements are so employed that a plurality of types of reaction gas materials which are formed by respective ones of the plurality of types of impurity elements are alternately supplied onto the substrate.

A plurality of types of reaction gas materials formed by respective ones of a plurality of types of impurity elements are alternately supplied onto the substrate, whereby it is possible to form a single-crystalline thin film having a plurality of types of single-crystalline layers containing the respective ones of the plurality of types of impurities such that an n-type semiconductor single-crystalline layer is formed on a p-type semiconductor single-crystalline layer in formation of a semiconductor single-crystalline thin film, for example.

Preferably, the beams of the gas are obtained by a single beam source and a reflector which is arranged in a path between the beam source and the substrate.

The beams of the gas which are applied to the substrate are obtained by a single beam source and a reflector which is arranged on a path, whereby it is possible to irradiate the substrate with the gas beams from directions which are perpendicular to a plurality of densest crystal planes having different directions with no requirement for a plurality of beam sources. In other words, only a single beam source having a complicated structure may be so prepared that it is possible to form the single-crystalline thin film with a simple structure in the method according to the present invention. Since a single beam source may be sufficient, further, it is possible to form the thin film under a high vacuum.

Preferably, the beam source is an ion generation source generating an ion beam of the gas, and the reflector is a metal reflector which is substantially made of a metal.

The beam source has an ion generation source which generates an ion beam of the gas, and the reflector is prepared from a metal reflector which is substantially made of a metal. Therefore, the ion beam of the gas generated from the ion source is converted to a neutral beam when the same is reflected by the metal reflector. Therefore, the substrate is irradiated with parallel beams which are regulated in direction. Further, it is possible to prepare the substrate from an electrical insulating substrate.

Preferably, the beam source is an electron cyclotron resonance type ion generation source.

The beam source is formed by an electron cyclotron resonance type ion generation source. Therefore, the ion beam has high directivity, while it is possible to obtain a strong neutral beam in a portion which is separated beyond a prescribed distance from the ion source with no employment of means for neutralizing ions. It is possible to irradiate the substrate with parallel beams from a plurality of prescribed directions by reflecting the neutral beam by the reflector and applying the same to the substrate. Further, it is also possible to prepare the substrate from an electrical insulating substrate.

According to the present invention, a method of forming a single-crystalline thin film of a prescribed material comprises (a) a step of forming an amorphous or polycrystalline thin film of the prescribed material on a substrate, (b) a step of forming a masking material on the thin film, (c) a step of selectively removing the masking material, and (d) a step of irradiating the substrate with gas beams of low energy levels causing no sputtering of the prescribed material from directions which are perpendicular to a plurality of densest crystal planes having different directions in the single-crystalline thin film to be formed while utilizing the selectively removed masking material as a screen under a high temperature below the

crystallization temperature of the prescribed material.

Preferably, the steps (b) to (d) are carried out plural times while varying directions for applying the beams in the step (d), thereby selectively converting the thin film to a single crystal having a plurality of types of crystal orientations.

In the method according to the present invention, the amorphous or polycrystalline thin film which is previously formed on the substrate is irradiated with gas beams from a plurality of directions. These beams are at energy levels causing no sputtering on the material as irradiated, whereby the law of Bravais acts so that a layer which is in the vicinity of the surface of the as-irradiated thin film is converted to a crystal having such a crystal orientation that planes perpendicular to the directions of the beams define densest crystal planes. The plurality of gas beams are applied from directions which are perpendicular to a plurality of densest crystal planes having different directions, whereby the as-formed crystal is set in a single orientation. Namely, a single-crystalline layer having a regulated crystal orientation is formed in the vicinity of the surface of the polycrystalline thin film. Further, a masking material is formed on the thin film to be irradiated in advance of irradiation, and this masking material is selectively removed. Thus, irradiation progresses with limitation on a specific region of the substrate corresponding to the selectively removed portion of the masking material, whereby the single-crystalline layer is formed only in the vicinity of the surface portion of the thin film corresponding to the specific region.

Further, the thin film is at a high temperature below the crystallization temperature and hence the single crystal which is formed in the vicinity of its surface serves as a seed crystal to be grown toward a deep portion by vertical solid phase epitaxial growth, whereby the overall region of the as-irradiated thin film is single-crystallized along the thickness. If the thin film is at a temperature exceeding the crystallization temperature, the as-formed single crystal is converted to a polycrystalline structure which is in a thermal equilibrium state. On the other hand, no crystallization toward a deep portion progresses at a temperature which is extremely lower than the crystallization temperature. Therefore, the temperature of the thin film is adjusted to be at a high level below the crystallization temperature, such as a level immediately under the crystallization temperature, for example.

According to the inventive method, as hereinabove described, it is possible to selectively form a single-crystalline thin film having a regulated crystal orientation on an arbitrary specific region of a substrate.

In the method according to the present invention, the steps from formation of the masking material to irradiation with the gas beams are repeated while varying directions of irradiation. Therefore, it is possible to selectively form single-crystalline thin films having different crystal orientations on a plurality of arbitrary specific regions of the substrate.

According to the present invention, a method of forming a single-crystalline thin film of a prescribed material comprises (a) a step of forming an amorphous or polycrystalline thin film of the prescribed material on a substrate, (b) a step of forming a masking material on the thin film, (c) a step of selectively removing the masking material, (d) a step of etching the thin film while utilizing the selectively removed masking material as a screen, thereby selectively removing the thin film while leaving a specific region on the substrate, and (e) a step of irradiating the substrate with gas beams of low energy levels causing no sputtering of the prescribed material from directions which are perpendicular to a plurality of densest crystal planes having different directions in the single-crystalline thin film to be formed under a high temperature below the crystallization temperature of the prescribed material.

In the method according to the present invention, the amorphous or polycrystalline thin film is selectively removed while leaving a specific region on the substrate and thereafter the thin film is irradiated with gas beams under a prescribed temperature to facilitate action of the law of Bravais and vertical solid phase epitaxial growth, thereby converting the thin film to a single-crystalline thin film. Thus, it is possible to selectively form a single-crystalline thin film having a regulated crystal orientation on an arbitrary specific region of the substrate.

According to the present invention, a method of forming a single-crystalline thin film of a prescribed material comprises (a) a step of forming an amorphous or polycrystalline thin film of the prescribed material on a substrate, (b) a step of irradiating the substrate with gas beams of low energy levels causing no sputtering of the prescribed material from directions which are perpendicular to a plurality of densest crystal planes having different directions in the single-crystalline thin film to be formed under a high temperature below the crystallization temperature of the prescribed material, (c) a step of forming a masking material on the thin film after the step (b), (d) a step of selectively removing the masking material, and (e) a step of etching the thin film while utilizing the selectively removed masking material as a screen, thereby selectively removing the thin film.

In the method according to the present invention, the amorphous or polycrystalline thin film formed on the substrate is irradiated with gas beams under a prescribed temperature to facilitate action of the law of

Bravais and vertical solid phase epitaxial growth, thereby converting the thin film to a single-crystalline thin film. Thereafter the single-crystalline thin film is selectively removed while leaving a specific region on the substrate. Therefore, it is possible to selectively form a single-crystalline thin film having a regulated crystal orientation on an arbitrary specific region on the substrate.

According to the present invention, a method of forming a single-crystalline thin film of a prescribed material comprises (a) a step of forming an amorphous or polycrystalline thin film of the prescribed material on a substrate, (b) a step of irradiating the substrate with gas beams of low energy levels causing no sputtering of the prescribed material from directions which are perpendicular to a plurality of densest crystal planes having different directions in the single-crystalline thin film to be formed under a low temperature causing no crystallization of the prescribed material by the step (a) alone while carrying out the step (a), (c) a step of forming a masking material on the thin film after the steps (a) and (b), (d) a step of selectively removing the masking material, and (e) a step of etching the thin film while utilizing the selectively removed masking material as a screen, thereby selectively removing the thin film.

In the method according to the present invention, an amorphous or polycrystalline thin film is formed on the substrate with application of gas beams under a prescribed temperature for facilitating action of the law of Bravais, thereby converting the thin film as being formed sequentially to a single-crystalline thin film. Thereafter the single-crystalline thin film is selectively removed while leaving a specific region on the substrate. Thus, it is possible to selectively form a single-crystalline thin film having a regulated crystal orientation on an arbitrary specific region of the substrate.

According to the present invention, a method of forming a single-crystalline thin film of a prescribed material comprises (a) a step of forming an amorphous or polycrystalline thin film of the prescribed material on a substrate, (b) a step of irradiating the substrate with gas beams of low energy levels causing no sputtering of the prescribed material from directions which are perpendicular to a plurality of densest crystal planes having different directions in the single-crystalline thin film to be formed under a high temperature below the crystallization temperature of the prescribed material, (c) a step of forming a masking material on the thin film after the step (b), (d) a step of selectively removing the masking material, and (e) a step of irradiating the substrate with the gas beams of low energy levels causing no sputtering of the prescribed material from directions which are perpendicular to the plurality of densest crystal planes having different directions in the single-crystalline thin film to be formed and different from those in the step (b), while utilizing the selectively removed masking material as a screen.

In the method according to the present invention, the amorphous or polycrystalline thin film formed on the substrate is irradiated with gas beams under a prescribed temperature to facilitate action of the law of Bravais and vertical solid phase epitaxial growth, thereby converting the thin film to a single-crystalline thin film. Thereafter a masking material is selectively formed on this single-crystalline thin film, which in turn is again irradiated with gas beams from new directions. At this time, the masking material serves as a screen for the gas beams, whereby the single-crystalline thin film is converted to a second single-crystalline thin film having a new crystal orientation on a region where the masking material is selectively removed. Namely, it is possible to selectively form single-crystalline thin films having different crystal orientations on a plurality of arbitrary specific regions of the substrate.

The atomic weight of an element forming the gas is preferably lower than the maximum one of the atomic weights of elements forming the prescribed material.

The atomic weight of the element forming the gas beams which are applied onto the substrate is lower than the maximum one of the atomic weights of the elements forming the thin film as irradiated, whereby most parts of the atoms forming the applied gas are rearwardly scattered on the surface of the thin film as irradiated or in the vicinity thereof, to hardly remain in the thin film. Thus, it is possible to obtain a single-crystalline thin film having a small amount of impurities.

The atomic weight of an element forming the gas is preferably lower than the maximum one of the atomic weights of elements forming the masking material.

The atomic weight of the element forming the gas beams which are applied onto the substrate is lower than the maximum one of the atomic weights of the elements forming the masking material, whereby most parts of the atoms forming the gas as applied are rearwardly scattered on the surface of the masking material or in the vicinity thereof, to hardly penetrate into the masking material and the thin film as irradiated. Thus, it is possible to obtain a single-crystalline thin film having a small amount of impurities.

The present invention is also directed to an apparatus for forming a single-crystalline thin film. According to the present invention, an apparatus for forming a single-crystalline thin film of a prescribed material on a substrate comprises irradiation means for irradiating the substrate with gas beams of low energy levels causing no sputtering of the prescribed material from directions which are perpendicular to a plurality of densest crystal planes having different directions in the single-crystalline thin film to be formed,

and substrate moving means for making the substrate scanned with respect to the irradiation means.

Preferably, the apparatus for forming a single-crystalline thin film further comprises beam focusing means for bringing sections of the gas beams into strip shapes on the substrate.

In the apparatus according to the present invention, the substrate can be scanned by the substrate moving means, whereby it is possible to form a single-crystalline thin film having high homogeneity on a long substrate.

Further, the apparatus according to the present invention comprises beam focusing means for bringing sections of the gas beams into strip shapes on the substrate, whereby it is possible to efficiently form a single-crystalline thin film with higher homogeneity by scanning the substrate.

According to the present invention, an apparatus for forming a single-crystalline thin film of a prescribed material on a substrate comprises a single beam source for supplying a beam of a gas, a reflector for reflecting at least a part of the beam which is supplied by the beam source, thereby implementing irradiation of the substrate with the gas in a plurality of prescribed directions of incidence, and reflector driving means for varying the angle of inclination of the reflector.

In the apparatus according to the present invention, the gas beams to be applied to the thin film are obtained by a single beam source and a reflector which is arranged in a path, whereby it is possible to irradiate the thin film with the gas beams from a plurality of prescribed directions which are different to each other with no requirement for a plurality of beam sources. Further, this apparatus comprises reflector driving means, whereby it is possible to change and re-set directions of incidence of the beams upon the substrate. Thus, it is possible to form a plurality of types of single-crystalline thin films having different crystal structures or different crystal orientations by a single apparatus.

According to the present invention, an apparatus for forming a single-crystalline thin film of a prescribed material on a substrate comprises a single beam source for supplying a beam of a gas, a plurality of reflectors, each of which reflects at least a part of the beam supplied by the beam source, thereby implementing irradiation of the substrate with the gas in a plurality of prescribed directions of incidence related to the angle of inclination of the reflector, and reflector exchange means for selecting a prescribed one from the plurality of reflectors and utilizing the same for reflecting the beam.

In the apparatus according to the present invention, the gas beams to be applied to the thin film are obtained by a single beam source and a reflector which is arranged in a path, whereby it is possible to irradiate the thin film with the gas beams from a plurality of prescribed directions which are different from each other with no requirement for a plurality of beam sources. Further, this apparatus comprises reflector exchange means, whereby it is possible to arbitrarily select directions of incidence of the beams upon the substrate from a plurality of reflectors to re-set the same. Thus, it is possible to form a plurality of types of single-crystalline thin films having different crystal structures or crystal orientations by a single apparatus.

The apparatus for forming a single-crystalline thin film preferably further comprises film forming means for forming an amorphous or polycrystalline thin film of the same material as the single-crystalline thin film on the substrate.

The apparatus of the present invention comprises film forming means such as chemical vapor deposition means, for example, whereby it is possible to sequentially convert the thin film as being formed to a single-crystalline thin film by forming the thin film while irradiating the same with gas beams. Thus, there is no need to facilitate vertical epitaxial growth of the thin film, whereby the single-crystalline thin film can be formed under a low temperature.

According to the present invention, an apparatus for forming a single-crystalline thin film of a prescribed material on a substrate comprises etching means for etching a surface of the substrate, film forming means for forming an amorphous or polycrystalline thin film of the prescribed material on the surface of the substrate, and irradiation means for irradiating the substrate with gas beams of low energy levels causing no sputtering of the prescribed material from directions which are perpendicular to a plurality of densest crystal planes having different directions in the single-crystalline thin film to be formed. Treatment chambers provided in the aforementioned means for storing the substrate communicate with each other. The apparatus further comprises substrate carrying means for introducing and discharging the substrate into and from the respective treatment chambers.

The apparatus according to the present invention comprises etching means, film forming means and irradiation means having treatment chambers communicating with each other, whereby it is possible to start film formation by carrying out etching treatment for removing an oxide film and preventing new progress of oxidation before forming the thin film on the substrate by employing this apparatus. Further, this apparatus comprises substrate carrying means, whereby the substrate can be efficiently carried into the respective treatment chambers.

According to the present invention, an apparatus for forming a single-crystalline thin film of a prescribed material on a substrate having a single-crystalline structure comprises irradiation means for irradiating the substrate with gas beams of low energy levels causing no sputtering of the prescribed material from directions which are perpendicular to a plurality of densest crystal planes having different directions in the single-crystalline thin film to be formed, and attitude control means for controlling the attitude of the substrate for setting prescribed relations between directions of crystal axes of the substrate and directions of incidence of the beams.

The apparatus according to the tenth aspect of the present invention comprises attitude control means, whereby it is possible to set prescribed relations between the crystal axes of the single-crystalline substrate and the directions of incidence of the gas beams by employing this apparatus. Thus, it is possible to epitaxially form a new single-crystalline thin film on a single-crystalline substrate at a temperature below the crystallization temperature.

According to the present invention, an apparatus for forming a single-crystalline thin film of a prescribed material on a substrate comprises film forming means for forming an amorphous or polycrystalline thin film of the prescribed material on the substrate by supplying a reaction gas, irradiation means for irradiating the substrate with gas beams of low energy levels causing no sputtering of the prescribed material from directions which are perpendicular to a plurality of densest crystal planes having different directions in the single-crystalline thin film to be formed, and substrate rotating means for rotating the substrate.

The apparatus according to the present invention comprises substrate rotating means, whereby it is possible to facilitate formation of an amorphous or polycrystalline thin film by intermittently applying the beams while regularly supplying the reaction gas and rotating the substrate during application pauses. Thus, it is possible to form an amorphous or polycrystalline thin film having high homogeneity, whereby high homogeneity is also attained in a single-crystalline thin film which is obtained by converting the same.

According to the present invention, an apparatus for forming a single-crystalline thin film of a prescribed material on a substrate comprises film forming means for forming an amorphous or polycrystalline thin film of the prescribed material on the substrate by supplying a reaction gas, and irradiation means for irradiating the substrate with gas beams of low energy levels causing no sputtering of the prescribed material from directions which are perpendicular to a plurality of densest crystal planes having different directions in the single-crystalline thin film to be formed. The film forming means has supply system rotating means for rotating an end portion of a supply path for supplying the substrate with the reaction gas with respect to the substrate.

The apparatus according to the present invention comprises supply system rotating means, whereby it is possible to obtain a single-crystalline thin film having high homogeneity while regularly supplying the reaction gas and applying the beams with no intermittent application of the beams. Namely, it is possible to efficiently form a single-crystalline thin film having high homogeneity.

According to the present invention, an apparatus for forming a single-crystalline thin film of a prescribed material on a substrate comprises a plurality of irradiation means for irradiating the substrate with a plurality of gas beams of low energy levels causing no sputtering of the prescribed material from directions which are perpendicular to a plurality of densest crystal planes having different directions in the single-crystalline thin film to be formed respectively, and control means for independently controlling operating conditions in the plurality of irradiation means respectively.

In the apparatus according to the present invention, control means independently controls operating conditions in irradiation means such as output beam densities, for example, whereby states of a plurality of beams which are applied to the substrate are optimumly controlled. Thus, it is possible to efficiently form a high-quality single-crystalline thin film.

The irradiation means preferably comprises an electron cyclotron resonance type ion source, and the gas beams are supplied by the ion source.

According to the present invention, an apparatus for forming a single-crystalline thin film of a prescribed material on a substrate comprises irradiation means for irradiating the substrate with beams of a gas supplied by an ion source at low energy levels causing no sputtering of the prescribed material from directions which are perpendicular to a plurality of densest crystal planes having different directions in the single-crystalline thin film to be formed, and bias means for applying a bias voltage across the ion source and the substrate in a direction for accelerating ions.

In the apparatus according to the present invention, bias means applies a bias voltage across the ion source and the substrate, whereby the gas beams are improved in directivity. Thus, it is possible to form a high-quality single-crystalline thin film having high homogeneity of the crystal orientation.

According to the present invention, an apparatus for forming a single-crystalline thin film of a prescribed material on a substrate comprises irradiation means for irradiating the substrate with beams of a gas

supplied by an ion source at low energy levels causing no sputtering of the prescribed material from directions which are perpendicular to a plurality of densest crystal planes having different directions in the single-crystalline thin film to be formed, with a grid which is provided in the vicinity of an ion outlet of the ion source, and grid voltage applying means for applying a voltage to the grid for controlling conditions for extracting ions from the ion source.

In the apparatus according to the present invention, grid voltage applying means optimumly controls conditions for extracting ions from the ion source, whereby it is possible to efficiently form a high-quality single-crystalline thin film.

In the apparatus according to the present invention, the beam source is preferably an electron cyclotron resonance type ion source.

In the apparatus according to the present invention, the gas beams are supplied by an electron cyclotron resonance type ion source, whereby the ion beams are excellent in directivity while it is possible to obtain strong neutral beams having excellent directivity at positions beyond a prescribed distance from the ion source without employing means for neutralizing ions.

According to the present invention, a beam irradiator for irradiating a target surface of a sample with a gas beam comprises a container for storing the sample, and a beam source for irradiating the target surface of the sample which is set in a prescribed position of the container with the gas beam, and at least a surface of a portion irradiated with the beam is made of a material having threshold energy which is higher than energy of the beam in sputtering by irradiation with the beam among an inner wall of the container and a member which is stored in the container.

At least the surface of the portion irradiated with the beam is made of a material having threshold energy which is higher than energy of the beam in sputtering by the irradiation with the beam among the inner wall of the container and the member stored in the container, whereby no sputtering is caused even if the beam reaches the member. Therefore, consumption of the member by sputtering is suppressed, while contamination of the target sample with the material element forming the member is prevented.

According to the present invention, a beam irradiator for irradiating a target surface of a sample with a gas beam comprises a container for storing the sample, and a beam source for irradiating the target surface of the sample which is set in a prescribed position of the container with the gas beam, and at least a surface of a portion irradiated with the beam is made of a material having threshold energy with respect to sputtering which is higher than that in the target surface of the sample among an inner wall of the container and a member which is stored in the container.

At least the surface of the portion irradiated with the beam is made of a material having threshold energy with respect to sputtering which is higher than that in the target surface of the sample among the inner wall of the container and the member stored in the container, whereby no sputtering is caused in this member when the target surface of the sample is irradiated with the beam causing no sputtering. Therefore, consumption of the member by sputtering is suppressed under such usage, while contamination of the target sample with the material element forming the member is prevented.

According to the present invention, a beam irradiator for irradiating a target surface of a sample with a gas beam comprises a container for storing the sample, and a beam source for irradiating the target surface of the sample which is set in a prescribed position of the container with the gas beam, and at least a surface of a portion irradiated with the beam is made of a material containing an element which is larger in atomic weight than that forming the gas among an inner wall of the container and a member which is stored in the container.

At least the surface of the portion irradiated with the beam is made of a material containing an element which is larger in atomic weight than that forming the beam gas among the inner wall of the container and the member stored in the container, whereby permeation of a different element in the member is suppressed. Therefore, deterioration of the member caused by invasion of the different element is suppressed.

According to the present invention, a beam irradiator for irradiating a target surface of a sample with a gas beam comprises a container for storing the sample, and a beam source for irradiating the target surface of the sample which is set in a prescribed position of the container with the gas beam, and at least a surface of a portion irradiated with the beam is made of the same material as that forming the target surface of the sample among an inner wall of the container and a member which is stored in the container.

At least the surface of the portion irradiated with the beam is made of the same material as that forming the target surface of the sample among the inner wall of the container and the member stored in the container, whereby the target sample is not contaminated with the material element forming the member even if sputtering is caused in this member.

The member stored in the container preferably includes reflecting means which is interposed in a path of the beam for separating the beam into a plurality of components and irradiating the target surface of the sample with the plurality of components from directions which are different from each other.

The reflecting means is stored in the container and at least the surface of the portion irradiated with the beam is made of a material causing no sputtering, the same material as that of the target surface of the sample, or a material containing an element which is larger in atomic weight than that forming the beam gas, whereby contamination of the sample by sputtering of the reflecting means is prevented or deterioration of the reflecting means is suppressed.

The present invention is also directed to a beam irradiating method. According to the present invention, a beam irradiating method of irradiating a target surface of a sample with a gas beam comprises a step of setting the sample in a prescribed position of a container, and a step of irradiating the target surface of the sample which is set in the container with the gas beam, and the target surface is irradiated with the beam at energy which is lower than threshold energy of sputtering in a surface of a portion which is irradiated with the beam among an inner wall of the container and a member stored in the container.

The target surface is irradiated with the beam at energy which is lower than threshold energy of sputtering on the surface of the portion irradiated with the beam among the inner wall of the container and the member stored in the container, whereby no sputtering is caused even if the beam reaches the member. Therefore, consumption of the member by sputtering is suppressed, while contamination of the target sample with the material element forming the member is prevented.

The present invention is also directed to a method of forming single-crystalline thin film. According to the present invention, a method of forming a single-crystalline thin film of a prescribed material on a substrate comprises a step of depositing the prescribed material on the substrate under a low temperature causing no crystallization of the prescribed material and irradiating the prescribed material as deposited with a gas beam of low energy causing no sputtering of the prescribed material from one direction, thereby forming an axially oriented polycrystalline thin film of the material, and a step of irradiating the axially oriented polycrystalline thin film with gas beams of low energy causing no sputtering of the prescribed material under a high temperature below a crystallization temperature of the prescribed material from directions which are perpendicular to a plurality of densest crystal planes of different directions in the single-crystalline thin film, thereby converting the axially oriented polycrystalline thin film to a single-crystalline thin film.

The axially oriented polycrystalline thin film is previously formed on the substrate and thereafter irradiated with the beams from a plurality of directions so that the thin film is converted to a single-crystalline thin film. Therefore, even if the substrate is not uniformly irradiated with the beams from the plurality of directions due to a screen formed on the substrate, for example, at least either a single-crystalline thin film or an axially oriented polycrystalline thin film is formed on any portion on the substrate, whereby no remarkable deterioration of characteristics is caused.

According to the present invention, a method of forming a single-crystalline thin film of a prescribed material on a substrate comprises a step of depositing the prescribed material on the substrate thereby forming a thin film of the material, a step of irradiating the thin film with a gas beam of low energy causing no sputtering of the prescribed material under a high temperature below a crystallization temperature of the prescribed material from one direction after the step, thereby converting the thin film to an axially oriented polycrystalline thin film, and a step of irradiating the axially oriented polycrystalline thin film with gas beams of low energy causing no sputtering of the prescribed material under a high temperature below the crystallization temperature of the prescribed material from directions which are perpendicular to a plurality of densest crystal planes of different directions in the single-crystalline thin film, thereby converting the axially oriented polycrystalline thin film to a single-crystalline thin film.

The axially oriented polycrystalline thin film is previously formed on the substrate and thereafter irradiated with the beams from a plurality of directions, so that the thin film is converted to a single-crystalline thin film. Therefore, even if the substrate is not uniformly irradiated with the beams from the plurality of directions due to a screen formed on the substrate, for example, at least either a single-crystalline thin film or an axially oriented polycrystalline thin film is formed on any portion on the substrate, whereby no remarkable deterioration of characteristics is caused.

The direction of the gas beam in formation of the axially oriented polycrystalline thin film is preferably identical to one of the plurality of directions of the gas beams in the conversion of the axially oriented polycrystalline thin film to the single-crystalline thin film.

The direction of application of the gas beam in formation of the axially oriented polycrystalline thin film is identical to one of the plurality of directions of gas beams for converting the axially oriented polycrystalline thin film to a single-crystalline thin film, whereby conversion to the single-crystalline thin film is

smoothly carried out.

The gas is preferably an inert gas.

The beam of an inert gas is so applied that no particularly remarkable influence is exerted on the electrophysical properties of the thin film even if the gas remains in the single-crystalline thin film as formed, while it is possible to easily remove the as-invaded gas from the thin film.

The atomic weight of an element forming the inert gas is preferably lower than the maximum atomic weight among those of elements forming the prescribed material.

The atomic weight of the element forming the inert gas is lower than the maximum atomic weight of elements forming the prescribed material which is grown as the thin film, whereby most part of atoms or ions of the applied inert gas are rearwardly scattered on the surface of the thin film or in the vicinity thereof, to hardly remain in the thin film.

The prescribed material preferably contains an element forming a gas material which is a gas under a normal temperature, and the gas beam is preferably a beam of the gas material.

The gas as applied contains an element forming the material grown as a thin film. Even if atoms or ions of the element remain in the thin film after irradiation, therefore, these will not exert a bad influence on the single-crystalline thin film as impurities.

The gas beam is preferably formed by an electron cyclotron resonance ion source.

The beam generation source is an electron cyclotron resonance ion generation source. Therefore, the ion beam has high directivity, while a strong neutral beam can be obtained at a distance exceeding a prescribed length from the ion generation source without employing means for neutralizing ions. Further, it is possible to employ an electrically insulating substrate without employing means for neutralizing the ions.

According to the present invention, a beam irradiator for irradiating a target surface of a sample with a gas beam comprises a single beam source for supplying the beam, and reflecting means for reflecting the beam which is supplied by the beam source, thereby enabling irradiation of the target surface with the gas in a plurality of prescribed directions of incidence, and the reflecting means comprises a reflector having a plurality of reflecting surfaces for reflecting the beam in a plurality of directions, and a screen which is interposed in a path of the beam between the beam source and the reflecting surfaces for selectively passing the beam thereby preventing multiple reflection by the plurality of reflecting surfaces.

Multiple reflection of the beam by the plurality of reflecting surfaces is prevented by the screen, whereby no beam is applied from a direction other than a prescribed direction of incidence.

The screen preferably further selectively passes the beam to uniformly irradiate the target surface with the beam.

The target surface is uniformly irradiated with the beam by action of the screen. Therefore, a high quality single-crystalline thin film is formed when the apparatus is applied to formation of a single-crystalline thin film, for example.

The present invention is also directed to a beam reflecting device. According to the present invention, a beam reflecting device for reflecting a gas beam which is supplied from a single beam source thereby enabling irradiation of a target surface of a sample with the gas in a plurality of prescribed directions of incidence comprises a reflector having a plurality of reflecting surfaces for reflecting the beam in a plurality of directions, and a screen which is interposed in a path of the beam between the beam source and the reflecting surfaces for selectively passing the beam thereby preventing multiple reflection by the plurality of reflecting surfaces.

Multiple reflection of the beam by the plurality of reflecting surfaces is prevented by the screen, whereby no beam is applied from a direction other than a prescribed direction of incidence.

The screen preferably further selectively passes the beam to uniformly irradiate the target surface with the beam.

The target surface is uniformly irradiated with the beam by action of the screen. Therefore, a high-quality single-crystalline thin film is formed when the apparatus is applied to formation of a single-crystalline thin film, for example.

According to the present invention, a beam irradiator for irradiating a target surface of a sample with a gas beam comprises a single beam source for supplying the beam, and reflecting means for reflecting the beam which is supplied by the beam source, thereby enabling irradiation of the target surface with the gas in a plurality of prescribed directions of incidence, and the reflecting means comprises a first reflector which is arranged in a path of the beam supplied from the beam source for reflecting the beam in a plurality of directions thereby generating a plurality of divergent beams having beam sections which are two-dimensionally enlarged with progress of the beams, and a second reflector having a concave reflecting surface for further reflecting the plurality of divergent beams to be incident upon the target surface substantially as parallel beams from a plurality of directions.

The gas beams applied to the target surface of the sample are obtained by the single beam source and the reflecting means provided in the path, whereby it is possible to irradiate the target surface with gas beams from a plurality of different prescribed directions with no requirement for a plurality of beam sources. Further, the beam is reflected by the first reflector to be two-dimensionally diverged in a plurality of directions and then converted to substantially parallel beams by the second reflector, whereby the beam can be uniformly applied to the target surface which is wider than the section of the beam supplied from the beam source. Therefore, it is possible to widely and efficiently form a single-crystalline thin film of a prescribed material on a wide substrate provided with a thin film of the prescribed material on its surface or a wide substrate having a thin film of the prescribed material being grown on its surface without scanning the substrate, by irradiating the substrate with a gas beam by this apparatus.

The reflecting means preferably further comprises rectifying means which is provided in a path of the beams between the first reflector and the substrate for regularizing directions of the beams.

The rectifying means is arranged in the path of the beam between the first reflector and the sample, whereby the beam can be regulated along a prescribed direction. Therefore, no strict accuracy is required for the shapes and arrangement of the respective reflectors, whereby the apparatus can be easily structured.

The reflecting means preferably further comprises beam distribution adjusting means which is interposed in a path of the beam between the beam source and the first reflector for adjusting distribution of the beam on a section which is perpendicular to the path, thereby adjusting the amounts of respective beam components reflected by the first reflector in the plurality of directions.

The beam distribution adjusting means adjusts the amounts of a plurality of beam components reflected by the first reflector, whereby the amounts of a plurality of beam components which are incident upon the target surface from a plurality of directions can be adjusted. Therefore, the amounts of the respective beam components incident upon the substrate can be optimumly set to be identical to each other, for example, whereby it is possible to efficiently form a high-quality single-crystalline thin film.

According to the present invention, a beam reflecting device for reflecting a gas beam which is supplied from a single beam source thereby enabling irradiation of a target surface of a sample with the gas in a plurality of prescribed directions of incidence comprises a first reflector for reflecting the beam in a plurality of directions thereby generating a plurality of divergent beams having beam sections which are two-dimensionally enlarged with progress of the beams, and a second reflector having a concave reflecting surface for further reflecting the plurality of divergent beams to be incident upon the target surface substantially as parallel beams from a plurality of directions.

The gas beam which is supplied from the single beam source is reflected by the first reflector to be two-dimensionally diverged in a plurality of directions and then converted to substantially parallel beams by the second reflector, whereby it is possible to irradiate the target surface which is wider than the section of the beam supplied from the beam source from a plurality of directions with no requirement for a plurality of beam sources. Therefore, it is possible to widely and efficiently form a single-crystalline thin film of a prescribed material on a wide substrate provided with a thin film of the prescribed material on its surface or a wide substrate having a thin film of the prescribed material being grown on its surface without scanning the substrate, by irradiating the substrate with a gas beam by this apparatus.

According to the present invention, a beam irradiator for irradiating a target surface of a sample with gas beams comprises a plurality of beam sources for supplying the gas beams, and a plurality of reflecting means for reflecting the beams which are supplied by the plurality of beam sources thereby enabling irradiation of a common region of the target surface with the gas in a plurality of prescribed directions of incidence, and each reflecting means comprises a first reflector which is arranged in a path of each beam supplied from each beam source for reflecting the beam thereby generating a beam having a beam section which is two-dimensionally enlarged with progress of the beam, and a second reflector having a concave reflecting surface for further reflecting the divergent beam to be incident upon a linear or strip-shaped common region of the target surface substantially as a parallel beam, while the beam irradiator further comprises moving means for scanning the sample in a direction intersecting with the linear or strip-shaped common region.

The beams are reflected by the first reflector to be substantially one-dimensionally diverged and thereafter converted to substantially parallel beams by the second reflector, whereby it is possible to irradiate a linear or strip-shaped region which is wider than the beams supplied from the beam sources with parallel beams from prescribed directions of incidence. Further, the sample is scanned in a direction intersecting with the linear or strip-shaped region, whereby the beams can be uniformly applied to a wide target surface. In addition, a plurality of beam sources and a plurality of reflecting means are so provided that a wide target surface can be uniformly irradiated with beams from a plurality of directions of incidence.

Each reflecting means preferably further comprises rectifying means which is provided in a path of each beam between the first reflector and the substrate for regulating the direction of the beam.

The rectifying means is arranged in the beam path between the first reflector and the substrate, whereby the beams can be regulated in a prescribed direction. Therefore, no strict accuracy is required for the shapes and arrangement of the respective reflectors, whereby the apparatus can be easily structured.

According to the present invention, a beam reflecting device for reflecting a gas beam which is supplied from a beam source thereby enabling irradiation of a target surface of a sample with the gas in a prescribed direction of incidence comprises a first reflector for reflecting the beam thereby generating a divergent beam having a beam section which is two-dimensionally enlarged with progress of the beam, and a second reflector having a concave reflecting surface for further reflecting the divergent beam to be incident upon a linear or strip-shaped region of the target surface substantially as a parallel beam.

The beams are reflected by the first reflector to be substantially one-dimensionally diverged and thereafter converted to substantially parallel beams by the second reflector, whereby it is possible to irradiate a linear or strip-shaped region which is wider than the beams supplied from the beam sources with the beams.

Accordingly, an object of the present invention is to provide a technique which can form an axially oriented polycrystalline thin film oriented in a desired direction and a single-crystalline thin film having a desired crystal orientation on an arbitrary substrate including a single-crystalline substrate.

Another object of the present invention is to provide a beam irradiator and a beam reflecting device for enabling efficient formation of a single-crystalline thin film.

Throughout the specification, the term "substrate" is not restricted to a substance simply serving as a base to be provided thereon with a thin film, but generally indicates a medium to be provided thereon with a thin film, including a device having a prescribed function, for example.

Throughout the specification, the term "gas beam" is a concept including all of a beam-type ion current, an atom current and a molecular flow.

The foregoing and other objects, features, aspects and advantages of the present invention will become more apparent from the following detailed description of the present invention when taken in conjunction with the accompanying drawings.

BRIEF DESCRIPTION OF THE DRAWINGS

Fig. 1 is a model diagram showing an apparatus which is suitable for carrying out a method according to a first preferred embodiment of the present invention;

Figs. 2A to 2C are perspective views showing a structure of a collimator;

Figs. 3A and 3B are sectional views showing a sample;

Fig. 4 is a front sectional view showing an apparatus which is suitable for carrying out a method according to a second preferred embodiment of the present invention;

Fig. 5 is a perspective view showing a reflector which is employed in the method according to the second preferred embodiment of the present invention;

Figs. 6A, 6B and 6C are a plan view, a side elevational view and a front elevational view showing an example of the reflector which is employed in the method according to the second preferred embodiment of the present invention;

Fig. 7 is a graph showing characteristics of an ECR ion generator which is employed in the method according to the second preferred embodiment of the present invention;

Fig. 8 illustrates experimental data verifying the method according to the second preferred embodiment of the present invention;

Fig. 9 is a perspective view showing another example of the reflector employed in the method according to the second preferred embodiment of the present invention;

Figs. 10A, 10B and 10C illustrate three surfaces of still another example of the reflector employed in the method according to the second preferred embodiment of the present invention;

Figs. 11A and 11B are structural diagrams showing a further example of the reflector employed in the method according to the second preferred embodiment of the present invention;

Figs. 12A and 12B are structural diagrams showing a further example of the reflector employed in the method according to the second preferred embodiment of the present invention; and

Fig. 13 is a front sectional view showing an apparatus which is suitable for carrying out a method according to a preferred embodiment of the present invention.

Fig. 14 is a front sectional view showing an apparatus according to a fourth preferred embodiment of the present invention;

Fig. 15 illustrates a result of a verification test in the apparatus according to the fourth preferred embodiment of the present invention;

Fig. 16 is a front sectional view showing an apparatus according to a fifth preferred embodiment of the present invention;

Fig. 17 is a perspective view showing a reflector in the fifth preferred embodiment;

Fig. 18 is a plan view of the reflector shown in Fig. 17;

Fig. 19 is an exploded perspective view of the reflector shown in Fig. 17;

Fig. 20 is an exploded perspective view of the reflector shown in Fig. 17;

Fig. 21 is a plan view of the reflector shown in Fig. 17;

Fig. 22 is a sectional view taken along the line A - A in Fig. 21;

Fig. 23 is a perspective view showing an apparatus according to a sixth preferred embodiment of the present invention;

Fig. 24 is a perspective view showing an apparatus according to a seventh preferred embodiment of the present invention;

Fig. 25 is a process diagram for illustrating a method according to an eighth preferred embodiment of the present invention;

Fig. 26 is a process diagram for illustrating the method according to the eighth preferred embodiment of the present invention;

Fig. 27 is a process diagram for illustrating the method according to the eighth preferred embodiment of the present invention;

Fig. 28 is a front sectional view of an apparatus according to a ninth preferred embodiment of the present invention;

Fig. 29 is a front sectional view showing a reflecting unit in the ninth preferred embodiment of the present invention;

Fig. 30 is a plan view showing a reflecting unit in the ninth preferred embodiment;

Fig. 31 is a front sectional view showing an apparatus according to a tenth preferred embodiment of the present invention;

Fig. 32 is a perspective view showing an apparatus according to an eleventh preferred embodiment of the present invention;

Fig. 33 is a plan view showing the apparatus according to the eleventh preferred embodiment of the present invention;

Fig. 34 is a front elevational view of the apparatus according to the eleventh preferred embodiment of the present invention;

Fig. 35 is a plan view of the apparatus according to the eleventh preferred embodiment of the present invention; and

Fig. 36 is a perspective view showing an apparatus according to a twelfth preferred embodiment of the present invention.

Fig. 37 is a process diagram showing a method according to a thirteenth preferred embodiment of the present invention;

Fig. 38 is a process diagram showing the method according to the thirteenth preferred embodiment of the present invention;

Fig. 39 is a process diagram showing the method according to the thirteenth preferred embodiment of the present invention;

Fig. 40 is a process diagram showing the method according to the thirteenth preferred embodiment of the present invention;

Fig. 41 is a process diagram showing the method according to the thirteenth preferred embodiment of the present invention;

Fig. 42 is a process diagram showing the method according to the thirteenth preferred embodiment of the present invention;

Fig. 43 is a process diagram showing a method according to a fourteenth preferred embodiment of the present invention;

Fig. 44 is a process diagram showing the method according to the fourteenth preferred embodiment of the present invention;

Fig. 45 is a process diagram showing the method according to the fourteenth preferred embodiment of the present invention;

Fig. 46 is a process diagram showing the method according to the fourteenth preferred embodiment of the present invention;

Fig. 47 is a process diagram showing the method according to the fourteenth preferred embodiment of the present invention;

Fig. 48 is a process diagram showing the method according to the fourteenth preferred embodiment of the present invention;

Fig. 49 is a process diagram showing the method according to the fourteenth preferred embodiment of the present invention;

Fig. 50 is a process diagram showing the method according to the fourteenth preferred embodiment of the present invention;

Fig. 51 is a process diagram showing the method according to the fourteenth preferred embodiment of the present invention;

Fig. 52 is a process diagram showing a method according to a seventeenth preferred embodiment of the present invention;

Fig. 53 is a process diagram showing the method according to the seventeenth preferred embodiment of the present invention;

Fig. 54 is a process diagram showing the method according to the seventeenth preferred embodiment of the present invention;

Fig. 55 is a process diagram showing the method according to the seventeenth preferred embodiment of the present invention;

Fig. 56 is a process diagram showing the method according to the seventeenth preferred embodiment of the present invention;

Fig. 57 is a process diagram showing the method according to the seventeenth preferred embodiment of the present invention;

Fig. 58 is a process diagram showing the method according to the seventeenth preferred embodiment of the present invention;

Fig. 59 is a process diagram showing the method according to the seventeenth preferred embodiment of the present invention;

Fig. 60 is a process diagram showing the method according to the seventeenth preferred embodiment of the present invention;

Fig. 61 is a process diagram showing a method according to an eighteenth preferred embodiment of the present invention;

Fig. 62 is a front elevational view showing an apparatus according to a nineteenth preferred embodiment of the present invention;

Fig. 63 is a plan view showing the apparatus according to the nineteenth preferred embodiment of the present invention;

Fig. 64 is a front sectional view showing the apparatus according to the nineteenth preferred embodiment of the present invention;

Fig. 65 is a perspective view showing the apparatus according to the nineteenth preferred embodiment of the present invention;

Fig. 66 is a front elevational view showing an apparatus according to a twentieth preferred embodiment of the present invention;

Fig. 67 is a plan view showing an apparatus according to a twenty-first preferred embodiment of the present invention;

Fig. 68 is a plan view showing an apparatus according to a twenty-third preferred embodiment of the present invention;

Fig. 69 is a front sectional view showing an apparatus according to a twenty-fourth preferred embodiment of the present invention;

Fig. 70 is a front sectional view showing another apparatus according to the twenty-fourth preferred embodiment of the present invention;

Fig. 71 is a partially fragmented sectional view showing an apparatus according to a twenty-fifth preferred embodiment of the present invention;

Fig. 72 is a plan view showing another apparatus according to the twenty-fifth preferred embodiment of the present invention;

Fig. 73 is a front sectional view showing an apparatus according to a twenty-sixth preferred embodiment of the present invention;

Fig. 74 is a front sectional view showing an apparatus according to a twenty-seventh preferred embodiment of the present invention;

Fig. 75 is a front sectional view showing an apparatus according to a twenty-eighth preferred embodiment of the present invention; and

Fig. 76 is a front sectional view showing an apparatus according to a twenty-ninth preferred embodiment of the present invention.

DESCRIPTION OF THE PREFERRED EMBODIMENTS

⟨A. Formation of Single-Crystalline Thin Film or Axially Oriented Polycrystalline Thin Film⟩

Preferred embodiments for efficiently forming a single-crystalline thin film or axially oriented polycrystalline thin film on a substrate are now described.

⟨A-1. First Preferred Embodiment⟩

A first preferred embodiment of the present invention is now described.

⟨A-1-1. Structure of Apparatus⟩

Fig. 1 is a model diagram showing the structure of an apparatus 80 for effectively implementing a method according to the first preferred embodiment of the present invention. This apparatus 80 is adapted to convert a polycrystalline thin film 82, which is formed on a substrate 81, to a single-crystalline thin film. Therefore, the apparatus 80 is supplied with a sample prepared by the polycrystalline thin film 82 of a prescribed material which is already formed on the substrate 81 by a well-known method.

For example, the substrate 81 is prepared from polycrystalline SiO_2 (quartz), and a polycrystalline Si (silicon) thin film 82 is formed on this quartz substrate 81, to be converted to a single-crystalline Si thin film. The apparatus 80 comprises cage-type ion sources 83. Inert gases are introduced into the ion sources 83 from conduits 84 and ionized therein by electron beams, thereby forming plasmas of the inert gases. Further, only ions are extracted from the ion sources 83 by action of electric fields which are formed by lead electrodes provided in the ion sources 83, whereby the ion sources 83 emit ion beams. For example, it is possible to accelerate Ne (neon) ions to 200 to 600 eV by the ion sources 83 of 10 cm in diameter, for example, with current densities of 1 to 9 mA/cm^2.

The ion beams which are emitted from the ion sources 83 are guided to reflection deaccelerators 85 and collimators 86, and thereafter applied to the surface of the polycrystalline thin film 82 at prescribed angles. Each reflection deaccelerator 85 is provided with two silicon single-crystalline plates having major surfaces of (100) planes. These silicon single-crystalline plates are in the form of discs having diameters of 15 cm, for example. These silicon single-crystalline plates successively reflect the ion beams which are incident on the major surfaces thereof at angles of incidence of 45° to reduce energy levels and neutralize electric charges thereof, thereby converting the ion beams to low-energy neutral atomic beams.

Figs. 2A to 2C are perspective views showing the structure of each collimator 86. Fig. 2A is an overall perspective view, Fig. 2B is an enlarged perspective view and Fig. 2C is a further enlarged perspective view. The collimator 86 regulates directions of the atomic beams, thereby supplying the polycrystalline thin film 82 with atomic beams having high directivity. The collimator 86 is formed by alternately stacking corrugated members, which are prepared by evaporating silicon films 86b on both sides of aluminum plates 86a as shown in Fig. 2C, and flat plate members having similar structures as shown in Fig. 2B. This collimator 86 has 30 layers, for example. Both surfaces of the aluminum plates 86a are covered with the silicon films 86b, so that aluminum atoms which are different atoms will not reach the polycrystalline Si thin film 82 even if the corrugated members and the flat plate members are struck by an neutral atom current to cause sputtering. The atomic beams are regularized in direction within a range of ±0.5° while passing through thin channels defined between the corrugated and flat plate members, to be converted to atomic beams having high directivity.

The quartz substrate 81 is mounted on a heater 87, which is adapted to maintain the quartz substrate 81 at a prescribed high temperature.

⟨A-1-2. Operation of Apparatus⟩

The operation of the apparatus 80 is now described. The sample which is supplied to the apparatus 80 can be prepared by forming the polycrystalline Si thin film 82 on the quartz substrate 81 by well-known chemical vapor deposition (CVD), for example. The quartz substrate 81 is 1.5 mm in thickness, for example, and the polycrystalline Si thin film 82 is about 2000 Å in thickness, for example. First, the sample as prepared is mounted on the heater 87. This heater 87 maintains the sample, i.e., the quartz substrate 81

and the polycrystalline Si thin film 82, at a temperature of 550°C. This temperature is lower than the crystallization temperature of silicon, whereby no single-crystalline Si is converted to polycrystalline Si under this temperature. However, this temperature is so high that polycrystalline Si can be grown to single-crystalline Si if a seed crystal is present.

Then, Ne (neon) gases are introduced into the ion sources 83 from the conduits 84, to form Ne ion beams. The as-formed Ne ion beams pass through the reflection deaccelerators 85 and the collimators 86, to reach the surface of the polycrystalline Si thin film 82 as low energy neutral Ne atomic beams.

The two Ne atomic beams which are started from the two ion sources 83 are incident upon the surface of the polycrystalline Si thin film 82 at angles of incidence of 35° so that the directions of incidence are two-fold symmetrical with each other about a normal line on the surface of the polycrystalline Si thin film 82. The directions of incidence of these two beams, which are at an angle of 70° to each other, correspond to normal line directions of independent two densest planes, i.e., (111) planes of single-crystalline Si having a diamond crystal structure.

The energy levels of the plasmas formed by the ion sources 83 are so set that the Ne atoms reaching the polycrystalline Si thin film 82 are at levels causing no sputtering of the polycrystalline Si thin film 82, i.e., at levels lower than a value (= 27 eV) known as a threshold energy level in sputtering of Si caused by irradiation with Ne atoms. Therefore, the so-called law of Bravais acts on the polycrystalline Si thin film 82. Namely, Si atoms provided in the vicinity of the surface of the polycrystalline Si thin film 82 are so rearranged that planes perpendicular to the directions of incidence of the Ne atomic beams which are applied to the polycrystalline Si thin film 82 define densest crystal planes.

Since the Ne atomic beams are incident from two directions corresponding to those perpendicular to the independent densest planes of the single-crystalline Si, whereby the Si atoms are so rearranged that planes perpendicular to the directions of incidence define the densest planes. Namely, two independent (111) planes are controlled by the two Ne atoms beams having independent directions of incidence to be rearranged in constant directions, whereby the crystal orientation is univocally decided. Thus, a layer which is close to the surface of the polycrystalline Si thin film 82 is converted to a single-crystalline Si layer having a regulated crystal orientation.

The above description corresponds to a first stage of single-crystallization of the polycrystalline Si thin film 82. Figs. 3A and 3B are model diagrams showing internal structures of the sample in the first stage and a following second stage of single-crystallization. In the first stage, a single-crystalline Si layer 88 is formed only in the vicinity of the surface of the polycrystalline Si thin film 82, as shown in Fig. 3A.

As hereinabove described, the temperature of the polycrystalline Si thin film 82 is adjusted to a level which is suitable for growing a seed crystal. Therefore, the single-crystalline Si layer 88 which is formed on the surface of the polycrystalline Si thin film 82 serves as a seed crystal, to be grown toward a deep portion of the polycrystalline Si thin film 82. Finally the overall region of the polycrystalline Si thin film 82 is converted to the single-crystalline Si layer 88, as shown in Fig. 3B. Thus, a single-crystalline Si thin film having a regulated crystal orientation is formed on the quartz substrate 81. Since the polycrystalline Si thin film 82 is maintained at a temperature which is lower than the crystallization temperature of Si as hereinabove described, the single-crystalline Si layer 88 will not return to the polycrystalline structure, which is a thermal equilibrium state.

The single-crystalline Si layer 88, which is formed on the polycrystalline Si thin film 82 by irradiation to serve as a seed crystal, is integrated with a polycrystalline Si layer remaining in its deep portion since this layer 88 is converted from the polycrystalline Si thin film 82. Namely, the polycrystalline Si layer 82 is completely in contact with the seed crystal. Therefore, vertical solid phase epitaxial growth progresses in an excellent state. Further, the seed crystal and the single-crystalline Si which is formed by the solid phase epitaxial growth are single crystals of the same material having the same crystal orientation, whereby it is not necessary to remove the seed crystal after formation of the single-crystalline Si thin film 88. Further, the single-crystalline Si thin film 88 is formed by the vertical solid phase epitaxial growth, whereby it is possible to efficiently obtain a desired single-crystalline Si thin film in a short time as compared with the prior art utilizing transverse growth.

An element forming the atomic beams which are applied to the polycrystalline Si thin film 82 is preferably prepared from Ne, as hereinabove described. Since Ne atoms are lighter than Si atoms, there is a high possibility that the relatively heavy Si atoms rearwardly scatter the relatively light Ne atoms when the atomic beams are applied to the Si thin film, whereby the Ne atoms hardly penetrate into the Si thin film to remain therein. Further, the inert element such as Ne is selected as an element forming the as-applied atomic beams since the inert element forms no compound with any element forming the thin film such as Si even if the same remains in the Si thin film, whereby the electronic/physical properties of the Si thin film are hardly influenced by this element and this element can be easily removed by increasing the temperature of

the as-finished single-crystalline Si thin film to some extent.

The sample is irradiated with the neutralized atomic beams in place of direct Ne ion beams, for the following reasons: First, charged particle beams such as ion beams are spread to lose directivity by repulsion between the particles caused by static electricity. Second, charges are stored in the thin film when charged particle beams are employed for the thin film which is made of a material having high resistivity or the like, such that the beams cannot reach the thin film beyond a certain amount due to repulsion of the stored charges. When neutral atomic beams are employed, on the other hand, no charges are stored in the thin film while parallel beams having excellent directivity reach the thin film to facilitate smooth crystallization.

⟨A-1-3. Other Exemplary Sample⟩

While the above description has been made on the case of converting the polycrystalline Si thin film 82 to a single-crystalline Si thin film, the inventive method is applicable not only to a polycrystalline thin film but to an amorphous thin film, to attain a similar effect. Experimental data verifying this point is now described.

In the experiment, a sample was prepared by previously forming an amorphous Si thin film on a quartz substrate by plasma CVD. Inert gases to be applied to the sample were prepared from Ne gases. The quartz substrate was 1.5 mm in thickness, and the amorphous Si thin film was about 2000 Å in thickness. This sample was mounted on the heater 87, and maintained at a temperature of 550 °C. In this state, the sample was irradiated with beams for about 20 seconds under conditions of acceleration voltages of ion sources of 2000 V and current densities of 2 mA/cm^2. As the result, a brown color specific to amorphous Si disappeared from the as-irradiated central portion of the sample, and this portion was changed to a slightly yellowish transparent state. In this portion, a part of about 1 cm^2 was examined with X rays and by directive etching, whereby it was provide that single-crystalline Si was formed with (110) axes along a normal line direction of the substrate.

The crystal orientation was decided by covering the crystal planes with SiO_2 (silicon dioxide) films, forming small holes in these oxide films, etching the same with KOH (potassium hydroxide) and confirming etching bits. As the result, it was possible to confirm that the etching bits were hexagonal, thereby confirming that single-crystalline Si having (110) axes in the normal line direction was completed.

⟨A-2. Second Preferred Embodiment⟩

A second preferred embodiment of the present invention is now described.

⟨A-2-1. Overall Structure of Apparatus⟩

Fig. 4 is a front sectional view showing an apparatus 101 for effectively implementing a method according to the second preferred embodiment of the present invention. This apparatus 101 is also adapted to convert a polycrystalline thin film, which is previously formed on a substrate 11, to a single-crystalline thin film, similarly to the aforementioned apparatus 80.

This apparatus 101 comprises a reaction vessel 1, and an electron cyclotron resonance (ECR) ion generator 2 which is built in an upper portion of the reaction vessel 1. The ECR ion generator 2 comprises a plasma container 3 which defines a plasma chamber 4 in its interior. A magnetic coil 5 is provided around the plasma container 3, to apply a dc high magnetic field to the plasma chamber 4. Further, a waveguide 6 and an inlet pipe 7 are provided on an upper surface of the plasma container 3 for introducing a microwave and an inert gas such as Ne gas into the plasma chamber 4 respectively.

The reaction vessel 1 defines an reaction chamber 8 in its interior. The bottom portion of the plasma container 3 defines an outlet 9 for passing a plasma in its center. The reaction chamber 8 and the plasma chamber 4 communicate with each other through the outlet 9. In the interior of the reaction chamber 8, a sample holder 10 is arranged on a position immediately under the outlet 9. The substrate 11 is placed on the sample holder 10, while a reflector 12 is placed to be located above the substrate 11. The sample holder 10 comprises a heater (not shown), to heat the substrate 11 and hold the same at a proper high temperature level.

The reflector 12 is preferably made of a metal. The sample holder 10 is coupled to a rotation driving mechanism (not shown), to be rotatable in a horizontal plane. Further, the sample holder 10 can horizontally move the substrate 11 while fixing the reflector 12.

The reaction chamber 8 communicates with an evacuation pipe 14. An end of the evacuation pipe 14 is coupled with a vacuum unit (not shown) to evacuate the reaction chamber 8 through the evacuation pipe 14, thereby maintaining the reaction chamber 8 at a prescribed degree of vacuum. A vacuum gauge 15 for displaying the degree of vacuum in the reaction chamber 8 is provided in communication with the reaction chamber 8.

⟨A-2-2. Structure of Reflector⟩

Fig. 5 is a perspective view showing an exemplary reflector 12a. This reflector 12a is adapted to form a single crystal having a diamond structure, such as single-crystalline Si. The reflector 12a defines an opening on a central portion of a flat plate type base 21. Three blocks 22 in the form of rectangular parallelopipeds are fixedly provided around the opening, and reflecting blocks 23 are fixed to inner sides of the blocks 22 respectively. Consequently, an equilateral triangular opening 24 which is trimmed with the reflecting blocks 23 is defined at the central portion of the base 21. In the reflecting blocks 23, slopes 25 facing the opening 24 serve as reflecting surfaces for reflecting a gas beam. Therefore, the angles of inclination of the slopes 25 are set at proper levels in correspondence to the directions of crystal axes of the single crystal to be formed.

Figs. 6A, 6B and 6C are a plan view, a side elevational view and a front elevational view of the reflector 12a which is formed by the blocks 22 and the reflecting blocks 23 respectively. As shown in Fig. 6B, the angle of inclination of each slope 25 is set at 55°. The reflector 12a is in a structure not fixing the substrate 11, whereby the substrate 11 can be relatively horizontally moved with respect to the reflector 12a. Therefore, it is possible to form a single-crystalline thin film on the substrate 11 having a large area by horizontally moving the substrate 11 while fixing the reflector 12a on the sample holder 10.

⟨A-2-3. Operation of ECR Ion Generator⟩

Referring again to Fig. 4, the operation of the ECR ion generator 2 is now described. An inert gas such as Ne gas or Ar gas is introduced from the inert gas inlet pipe 7 into the plasma chamber 4, while a microwave is simultaneously introduced from the waveguide 6 into the plasma chamber 4. Further, a dc current is also simultaneously supplied to the magnetic coil 5, to form a dc magnetic field in the plasma chamber 4 and its periphery. The gas as supplied is maintained in a plasma state by actions of the microwave and the dc magnetic field. This plasma is formed by high-energy electrons which are in screw motion in the principle of cyclotron by the microwave and the dc magnetic field.

These electrons, which have diamagnetic properties, are moved to a weaker magnetic field side, to form an electron stream along a line of magnetic force. Consequently, positive ions also form an ion current along the line of magnetic force following the electron stream, in order to maintain electrical neutrality. In other words, the electron stream and the ion current are downwardly directed from the outlet 9 into the reaction chamber 8. The ion current and the electron stream thus flowing in parallel with each other are recombined with each other after a lapse of a deionization time, to form a neutral atom current. Therefore, substantially only a neutral atom current is formed in a position downwardly separated from the outlet 9 beyond a prescribed distance.

Fig. 7 is a graph showing the result of relation between ion current density and the distance from the outlet 9 actually measured when Ar^+ ions of 10 eV were discharged from the outlet 9 by the ECR ion generator 2. It is understood from this graph that the ion current density is abruptly reduced at a distance of about 4 to 5 cm from the outlet 9, and attenuated to a level of 1/10 to 1/12 at a position of 14 cm. The neutral atom current is increased by such attenuation of the ion current, whereby substantially only a neutral atom current downwardly flows in a position downwardly separated from the outlet 9 by at least 14 cm.

Thus, the ECR ion generator 2 for generating ions forms an ion current in parallel with the electron stream, whereby it is possible to easily obtain a neutral atom current having high density by employing the ECR ion generator 2, with no employment of other means for neutralizing the ion current. Since the ion current is formed in parallel with the electron stream, further, it is possible to obtain an ion current which is close to a parallel current having a regulated direction of progress substantially with no divergence. Since the parallel ion current is converted to the neutral atom current, the atom current is also close to a parallel current having a regulated direction of progress.

⟨A-2-4. Operation of Apparatus 101⟩

Referring again to Fig. 4, the operation of the apparatus 101 is now described. It is assumed that the reflector 12 is implemented by the reflector 12a shown in Figs. 5 and 6A to 6C and the substrate 11 is prepared from polycrystalline SiO_2 (quartz), so that a single-crystalline Si thin film is formed on the quartz substrate 11. A polycrystalline Si thin film is previously formed on the quartz substrate 11 by a well-known method such as CVD.

First, the sample is mounted between the sample holder 10 and the reflector 12a (12). The heater provided in the sample holder 10 holds the sample, i.e., the quartz substrate 11 and the polycrystalline Si thin film, at a temperature similar to that in the first preferred embodiment, i.e., a temperature of 550 °C.

An inert gas which is introduced from the inert gas inlet pipe 7 is preferably prepared from Ne gas having a smaller atomic weight than Si atoms. Due to the action of the ECR ion generator 2, an Ne^+ ion current and an electron stream are formed downwardly from the outlet 9. The distance between the outlet 9 and the reflector 12a (12) is preferably set at a sufficient level for substantially converting the Ne^+ ion current to a neutral Ne atom current. The reflector 12a (12) is set in a position receiving the downwardly directed Ne atom current.

A part of the downwardly directed Ne atom current is reflected by the three slopes 25 which are formed in the reflector 12a, to be applied to the polycrystalline Si thin film provided on the SiO_2 substrate 11 through the opening 24. Another part of the Ne atom current is not incident upon the slopes 25 but directly incident upon the polycrystalline Si thin film through the opening 24. In other words, the polycrystalline Si thin film is irradiated with four Ne atom current components, i.e., a component straightly received from the outlet 9 and three components reflected by the three slopes 25. Since the angles of inclination of the slopes 25 are set at 55°, directions of incidence of the four Ne atom current components correspond to four directions which are perpendicular to four independent densest crystal planes of the Si single crystal to be formed, i.e., (111) planes.

The energy of the plasma which is formed by the ECR ion generator 2 is so set that the Ne atoms reaching the SiO_2 substrate 11 are at energy levels which are lower than threshold energy (= 27 eV) in sputtering of Si by irradiation with Ne atoms. Therefore, the law of Bravais acts on the polycrystalline Si thin film. As the result, the Si atoms in the polycrystalline Si thin film are so rearranged that planes which are perpendicular to the direction of incidence of the Ne atomic current as applied define densest crystal planes. Since the Ne atom current as applied has four components which are incident in directions corresponding to those perpendicular to four independent densest planes of the single-crystalline Si, the Si atoms are so rearranged that all planes perpendicular to the directions of incidence define the densest planes. Namely, the directions of rearrangement of the four independent (111) planes are controlled by four Ne atomic beams having directions of incidence which are independent of each other, whereby the crystal orientation is univocally decided. Thus, a layer in the vicinity of the surface of the polycrystalline Si thin film is converted to a single-crystalline Si layer having a regulated crystal orientation.

The temperature of the polycrystalline Si thin film 82 is adjusted to 550 °C, i.e., a level within a range suitable for growing a seed crystal. Therefore, the single-crystalline Si layer which is formed on the surface of the polycrystalline Si thin film 82 serves as a seed crystal, to be grown toward a deep portion of the polycrystalline Si thin film 82. Then, the overall region of the polycrystalline Si thin film 82 is converted to a single-crystalline Si layer. Thus, a single-crystalline Si layer having a regulated crystal orientation is formed on the quartz substrate 11. The aforementioned Figs. 3A and 3B typically express the aforementioned formation of the single-crystalline Si layer and the process of its growth.

As hereinabove described, the reflector 12 is preferably made of a metal, since Ne^+ ions are converted to neutral atoms when an Ne^+ ion current which is slightly mixed in the neutral Ne atom current is reflected by the conductive reflector 12, so that the substrate 11 is irradiated with the as-converted neutral Ne atom current. The neutral atom current is advantageously incident upon the substrate 11 as a flow having a regulated direction since its direction of progress hardly diverges dissimilarly to an ion current.

In the process of irradiating the sample with the Ne atomic current, the rotation driving mechanism (not shown) may be driven to rotate the sample holder 10. Thus, it is possible to improve homogeneity in distribution of an amount of irradiation on the polycrystalline Si thin film.

⟨A-2-5. Valid Data⟩

Description is now made on a test verifying formation of a single-crystalline thin film by the method according to the second preferred embodiment. Fig. 8 illustrate experimental data showing electron beam diffraction images of samples comprising polycrystalline SiO_2 substrates and single-crystalline Si thin films

formed thereon on the basis of the aforementioned method. The sample was obtained by irradiating a substrate with four Ne atom current components using a reflector.

In this sample, three-fold rotation-symmetrical diffraction spots were obtained as shown in Fig. 8. This verifies that the as-obtained sample was formed as single-crystalline Si having regulated crystal axes. Since it was possible to convert a polycrystalline Si thin film having a polycrystalline structure of higher regularity in atomic arrangement than an amorphous structure to a single-crystalline Si thin film, it is conceivably decided possible to convert a thin film having an amorphous structure such as amorphous Si to a single-crystalline thin film, as a matter of course.

〈A-2-6. Methods of Forming Single-Crystalline Thin Films other than Si Thin Film〉

While the structure and the operation of the apparatus 101 have been described with reference to formation of a single-crystalline Si thin film, it is also possible to form single-crystalline thin films other than an Si thin film through the apparatus 101.

Table 1

Gas Material for Crystal Forming Step	
for GaAs	
Ion Beam	Ar, Ne
Element	$Ga(CH_3)_3$ AsH_3
Impurity	$Zn(CH_3)_3$, $Zn(C_2H_5)_3$ (p-type) SiH_4 (n-type)
for GaN	
Ion Beam	Ar, Ne, NH_3
Element	$Ga(CH_3)_3$ NH_3
Impurity	$Zn(CH_3)_3$, $Zn(C_2H_5)_3$ (p-type) SiH_4 (n-type)
for Si	
Ion Beam	Ne
Element	SiH_4 Si_2H_6
Impurity	B_2H_3 (p-type) AsH_3 (n-type) PH_3 (n-type)

Table 1 shows values of sputtering threshold energy in various combinations of types of atoms or ions as applied and elements forming target thin films. In each combination, it is necessary to apply an ion current or an atom current which is at a lower energy level than the as-listed threshold energy. As to thin films formed by compounds, refer to threshold energy levels related to elements having the maximum atomic weights among the elements. The values shown in Table 1 have been obtained on the basis of simulation, unless otherwise stated.

When the thin film as irradiated is formed not by a simple substance such as Si but a compound such as GaAs, for example, it is advisable to apply atoms which are lighter than an element having the maximum atomic weight. Further, beams of a compound such as those of N_2 may be applied in place of beams of simple atoms, for example. In this case, an element (for example, N atoms) forming the compound is preferably lighter than the element having the maximum atomic weight forming the thin film as irradiated.

⟨A-2-7. Other Examples of Reflector⟩

Description is now made on other exemplary structures of the reflector. Figs. 9 and 10A to 10C illustrate a reflector 12b for forming a single-crystalline thin film having a diamond crystal structure whose (111) planes define densest planes, similarly to the reflector 12a shown in Fig. 5. Fig. 9 is a perspective view of the reflector 12b, and Figs. 10A to 10C illustrate three surfaces thereof. This reflector 12b is provided with a groove 31a for sliding the substrate 11 on an upper surface of a base 31 which is mounted on the sample holder 10, so that the substrate 11 is built in the base 31. Therefore, the substrate 11 is fixed to the groove 31a when the same is irradiated, dissimilarly to the reflector 12a. Bottom surfaces of reflecting blocks 33 are placed on the upper surface of the base 31, so that the reflecting blocks 33 are located on the substrate 11. As shown in Fig. 10B, the angles of inclination of slopes 35 provided in the reflecting blocks 33 are set at 55°, similarly to those of the reflector 12a.

It is also possible to form a single-crystalline thin film having a crystal structure other than a diamond structure. In this case, still another reflector may be prepared to have a crystal structure which is suitable for the target crystal structure. Further, it is also possible to form a single-crystalline thin film having various crystal orientations in the same crystal structure. In this case, a reflector which is suitable for respective crystal orientations is prepared, as hereinafter described.

Figs. 11A and 11B illustrate an exemplary reflector 12c corresponding to a single crystal of a diamond structure, whose (100) planes are parallel to a substrate surface. Fig. 11A is a front sectional view taken along the line A - A in Fig. 11B, which is a plan view showing the reflector 12c. A groove 42 is formed on an upper surface of a flat plate type base 41. The substrate 11 is inserted in this groove 42. Namely, the reflector 12c is adapted to receive the substrate 11, which cannot be relatively horizontally moved with respect to the reflector 12c when the same is irradiated. This base 41 is placed on the sample holder 10.

Four reflecting blocks 43 are arranged on the base 41 around the substrate 11, to be perpendicularly adjacent to each other. A shielding plate 46 having openings 47 only above slopes 45 of the reflecting blocks 43 is set on upper surfaces of the reflecting blocks 43. An atom current or an ion current which is incident upon the shielding plate 46 downwardly from above passes through the openings 47 alone, to be entirely reflected by the slopes 45. Namely, only four components of the atom current or the ion current as reflected are incident upon the substrate 11, with no presence of a component which is directly incident from the above. The angles of inclination of the slopes 45 are set at 62.63°. Therefore, the directions of incidence of the four components match with directions perpendicular to four (111) planes, which are independent of each other, in the crystal of the diamond structure.

Figs. 12A and 12B illustrate a reflector 12d corresponding to a single crystal of a diamond structure whose (110) planes are parallel to a substrate surface. Fig. 12A is a front sectional view taken along the line B - B in Fig. 12B, which is a plan view showing the reflector 12d. A groove 52 is formed on an upper surface of a base 51 having an angle of inclination of 35°. The substrate 11 is inserted in this groove 52. Namely, this reflector 12d is adapted to receive the substrate 11, which cannot be relatively horizontally moved with respect to the reflector 12d when the same is irradiated. This base 51 is placed on the sample holder 10.

A single reflecting block 53 is arranged on the base 51. A slope 55 of the reflecting block 53 is set at an angle of inclination of 90° with respect to the upper surface of the base 51. Therefore, an atom current or an ion current which is incident from above is divided into two components including that which is directly incident upon the substrate 11 at an angle of incidence of 35° and that which is reflected by the slope 55 and incident from an opposite side similarly at an angle of incidence of 35°. Directions of incidence of these components match with directions which are perpendicular to two independent planes among four independent (111) planes in the crystal of a diamond structure. Namely, these two components define directions of two densest planes which are independent of each other, whereby it is possible to form a single-crystalline thin film of a diamond structure having a regulated crystal orientation so that the (110) planes are parallel to the substrate surface by employing the reflector 12d.

⟨A-3. Third Preferred Embodiment⟩

A third preferred embodiment of the present invention is now described.

⟨A-3-1. Overall Structure of Apparatus⟩

Fig. 13 is a front sectional view showing a structure of a single-crystalline thin film forming apparatus 100 for effectively implementing a method of forming a single-crystalline thin film according to a preferred

embodiment of the present invention. In Fig. 13, the identical numerals are employed with Fig. 4 to represent the identical components, and therefore, the detailed description of the numerals in Fig. 13 is omitted. Similarly to the apparatus 101, the apparatus 100 comprises a reaction vessel 1, and an electron cyclotron resonance (ECR) ion generator 2 which is built in an upper portion of the reaction vessel 1. In the interior of the reaction chamber 8, a sample holder 10 is arranged on a position immediately under the outlet 9. In this apparatus 101, the sample holder 10 is not required to comprise a heater. A substrate 11 is placed on the sample holder 10, while a reflector 12 is placed to be located above the substrate 11. The substrate 11, which is a flat plate of a material having a polycrystalline structure or an amorphous structure, is one of elements forming a sample. A desired single-crystalline thin film is formed on this substrate 11. The reflector 12a (Fig. 5, Figs. 6A to 6C), 12b (Fig. 9, Figs. 10A and 10B), 12c (Figs. 11A and 11B) or 12b (Figs. 12A and 12B) can be adopted as the reflector 12.

The reaction chamber 8 communicates with reaction gas supply pipes 13. Reaction gases are supplied through the reaction gas supply pipes 13, for forming a thin film of a prescribed material on the substrate 11 by plasma CVD. The preferred embodiment shown in Fig. 1 is provided with three reaction gas supply pipes 13a, 13b and 13c. Similarly to the apparatus 101, an end of the evacuation pipe 14 is coupled with a vacuum unit (not shown) to evacuate the reaction chamber 8 through the evacuation pipe 14, thereby maintaining the reaction chamber 8 at a prescribed degree of vacuum.

〈A-3-2. Operation of Apparatus 100〉

The operation of the apparatus 100 is now described. It is assumed that the reflector 12 is implemented by the reflector 12a shown in Figs. 5 and 6A to 6C and the substrate 11 is prepared from polycrystalline SiO_2 (quartz), so that a thin film of single-crystalline Si is formed on the quartz substrate 11. The reaction gas supply tubes 13a, 13b and 13c supply SiH_4 (silane) gas for supplying Si, which is a main material for the single-crystalline Si, and B_2H_3 (diborane) gas and PH_3 (phosphine) gas for doping the substrate 11 with p-type and n-type impurities respectively. An inert gas which is introduced from the inert gas inlet pipe 7 is preferably prepared from Ne gas having a smaller atomic weight than Si atoms.

Due to the action of the ECR ion generator 2, an Ne^+ ion current and an electron stream are formed downwardly from the outlet 9. The distance between the outlet 9 and the reflector 12a (12) is preferably set at a sufficient level for substantially converting the Ne^+ ion current to a neutral Ne atom current. The reflector 12a (12) is set in a position receiving the downwardly directed Ne atom current. The silane gas which is supplied from the reaction gas supply tube 13a is dashed against the SiO_2 substrate 11 by the Ne^+ ion current or the Ne atom current. Consequently, a plasma CVD reaction progresses on the upper surface of the SiO_2 substrate 11, to grow a thin film formed by Si which is supplied by the silane gas, i.e., an Si thin film. On the other hand, the diborane gas or the phosphine gas is supplied with a properly adjusted flow rate, whereby a plasma CVD reaction caused by this gas also progresses to form the Si thin film containing B (boron) or P (phosphorus) in desired density.

The SiO_2 substrate 11 is not heated and hence maintained substantially at an ordinary temperature, whereby the Si thin film is grown substantially under the ordinary temperature. In other words, the Si thin film is formed at a temperature not more than a level facilitating crystallization by plasma CVD. Thus, the Si thin film is first formed as an amorphous Si film by plasma CVD.

A part of the downwardly directed Ne atom current is reflected by the three slopes 25 which are formed in the reflector 12a, to be incident upon the upper surface of the SiO_2 substrate 11 through the opening 24. Another part of the Ne atom current is not incident upon the slopes 25 but directly incident upon the upper surface of the SiO_2 substrate 11 through the opening 24. In other words, the Si thin film being formed on the upper surface of the SiO_2 substrate 11 is irradiated with four Ne atom current components, i.e., a component straightly received from the outlet 9 and three components reflected by the three slopes 25. Since the angles of inclination of the slopes 25 are set at 55°, directions of incidence of the four Ne atom current components correspond to four directions which are perpendicular to four independent densest crystal planes of the Si single crystal to be formed, i.e., (111) planes.

The energy of the plasma which is formed by the ECR ion generator 2 is so set that the Ne atoms reaching the SiO_2 substrate 11 are at energy levels causing no sputtering in the as-formed Si thin film, i.e., levels lower than the threshold energy level in sputtering of Si by irradiation with Ne atoms (= 27 eV). Therefore, the law of Bravais acts on the as-grown amorphous Si thin film. Namely, the Si atoms in the amorphous Si are rearranged so that planes which are perpendicular to the Ne atom current components applied to the amorphous Si define densest crystal planes. Since the Ne atom current as applied has four components which are incident in directions corresponding to those perpendicular to the densest planes of the single-crystalline Si having a single crystal orientation, the Si atoms are so rearranged that all planes

perpendicular to the directions of incidence of the respective components define the densest planes. The directions of the (111) planes are controlled by the plurality of components of the Ne atom current having directions of incidence which are independent of each other, whereby single-crystalline Si having a single crystal orientation is formed by such rearrangement of the Si atoms. In other words, the amorphous Si thin film being grown by plasma CVD is sequentially converted to a single-crystalline Si thin film having a regulated crystal orientation.

The diborane gas or the phosphine gas is supplied by the reaction gas supply pipe 13b or 13c simultaneously with the silane gas, thereby forming a p-type or n-type single-crystalline Si thin film containing B or P. It is also possible to form an equiaxed n-type single-crystalline Si layer on a p-type single-crystalline Si layer, for example, by alternating these reaction gases containing impurity elements.

As hereinabove described, the SiO_2 substrate 11 is not heated and the Si thin film is formed under a temperature which is lower than that facilitating crystallization by plasma CVD. This is because the crystal orientation is arbitrarily directed regardless of the directions of the Ne atom current components and cannot be controlled while a polycrystal is inevitably formed under a high temperature facilitating crystallization of Si by plasma CVD alone with no application of the Ne atom current components.

As described in the first preferred embodiment, Ne which is lighter than Si atoms is preferably selected as an element forming the atom current which is applied to the Si thin film. As described in the second preferred embodiment, the reflector 12 is preferably made of a metal.

In the apparatus 100, conversion to a single crystal sequentially progresses at the same time in the process of growth of the Si thin film by plasma CVD. Thus, it is possible to form a single-crystalline Si thin film having a large thickness under a low temperature. Since a single-crystalline thin film can be formed under a low temperature, it is possible to further form a new single-crystalline thin film on a substrate which is already provided with a prescribed device without changing properties of the device, for example.

Thus, it is possible to form a single-crystalline thin film not only on a substrate which serves only as a support member for a thin film but on a substrate of a device having a prescribed structure and functions in this apparatus 100.

An experimental test was performed in order to verify the formation of a single-crystalline thin film by the aforementioned method. A similar electron beam diffraction image to that shown in Fig. 8 was observed for a sample comprising polycrystalline SiO_2 substrates and single-crystalline Si thin films formed thereon.

This verifies that the sample obtained by use of the reflector 12 was formed as single-crystalline Si having regulated crystal axes. Since it was possible to form a single-crystalline Si thin film on an SiO_2 substrate of a polycrystalline structure having higher regularity than an amorphous structure in atomic arrangement, it is conceivably decided possible to form a single-crystalline thin film on a substrate having an amorphous structure, such as an amorphous Si substrate, as a matter of course.

〈A-3-3. Preferred Methods of Forming Single-Crystalline Thin Films other than Si Thin Film〉

While the structure and the operation of the apparatus 100 have been described with reference to formation of a single-crystalline thin film, it is also possible to form single-crystalline thin films other than an Si thin film through the apparatus 100. Tables 2 to 5 show conditions for forming semiconductor single-crystalline thin films having relatively high demands, including the Si thin film as already described, for example. Table 2 shows types of inert gases and reaction gases as supplied.

Tables 3 to 5 show reaction gas flow rates, inert gas flow rates and other process control conditions in formation of respective semiconductor single-crystalline thin films.

Table 2

Threshold Energy							
Target	Incident Ion (* Actually Measured Value)						
	He	Ne	Ar	Kr	Xe	Hg	Hg (Actually Measured Value)
Al	127	59	59	77	100	136	120 ~ 140
Si	60	27	27	35	45	61	60 ~ 70
			25*				
GaAs			25*				
Ge	225	66	49	45	48	57	40 ~ 50
Ta	1620	385	233	233	159	147	120 ~ 140
W	1037	245	147	100	89	87	89 ~ 87
Pt	850	198	118	79	69	67	70 ~ 90

Table 3

Process Control Condition for Forming Si	
Gas Flow Rate	
SiH_4 or Si_2H_6 AsH_3 (Diluted to 10% with Ne) B_2H_6 (Diluted to 10% with Ne) Ne (for ECR Chamber)	5sccm ($1 \times 10^{-5} \sim 4 \times 10^{-5}$ mol/min) 5sccm (5×10^{-7} mol/min) for n-type Crystal 5sccm (5×10^{-7} mol/min) for p-type Crystal 25sccm (1×10^{-3} mol/min)
Substrate Temperature (SiO_2 Substrate)	Room Temperature
Degree of Vacuum	
Back Pressure Operating Pressure	$\sim 10^{-7}$ Torr $1 \times 10^{-4} \sim 4 \times 10^{-4}$ Torr
Microwave Power (2.34 GHz)	300 W
Growth Rate	2 μ/hr

Table 4

Process Control Condition for Forming GaN	
Gas Flow rate	
TMG (Trimethyl Gallium) Carrier Gas N_2 NH_3 DMZ (Dimethyl Zinc) Carrier Gas N_2 SiH_4 (Diluted to 10% with Ne) Ne (For ECR Chamber)	Bubbler employed. Held at -12 °C ~ 10 °C 5sccm ($1 \times 10^{-5} \sim 4 \times 10^{-5}$ mol/min) 10sccm (4×10^{-4} mol/min) for Forming p-type Crystal 5sccm ($1 \times 10^{-5} \sim 2.4 \times 10^{-5}$ mol/min) for Forming n-type Crystal 5sccm ($1 \times 10^{-5} \sim 2.4 \times 10^{-5}$ mol/min) 15ccm (7×10^{-4} mol/min)
Substrate Temperature (Si Substrate)	370 °C
Degree of Vacuum	
Back Pressure Operating Pressure	$\sim 10^{-7}$ Torr $1 \times 10^{-4} \sim 4 \times 10^{-4}$ Torr
Microwave Power (2.34 GHz)	300 W
Growth Rate	0.1 ~ 0.3 μ/hr

Table 5

Process Control Condition for Forming GaAs	
Gas Flow rate	
TMG (Trimethyl Gallium) Carrier Gas Ar AsH_3 (Diluted to 10% with Ar) DMZ (Dimethyl Zinc) Carrier Gas Ar H_2Te (Diluted to 10% with Ar) Ar (For ECR Chamber)	Bubbler employed. Held at -12 °C ~ 10 °C 5sccm ($1 \times 10^{-5} \sim 4 \times 10^{-5}$ mol/min) 10sccm (4×10^{-4} mol/min) for Forming p-type Crystal 5sccm ($1 \times 10^{-5} \sim 2.4 \times 10^{-5}$ mol/min) for Forming n-type Crystal 5sccm ($1 \times 10^{-5} \sim 2.4 \times 10^{-5}$ mol/min) 15ccm (7×10^{-4} mol/min)
Substrate Temperature (Si Substrate)	500 °C
Degree of Vacuum	
Back Pressure Operating Pressure	$\sim 10^{-7}$ Torr $1 \times 10^{-4} \sim 4 \times 10^{-4}$ Torr
Microwave Power (2.34 GHz)	300 W
Growth Rate	0.1 ~ 0.3 μ/hr

Thus, in each of the apparatuses 100 and 101, it is possible to form not only the aforementioned Si single-crystalline thin film but various types of single-crystalline thin films on substrates such as compound single-crystalline thin films of GaAs, GaN and the like and a single-crystalline thin film of an insulator such as SiO_2, for example.

〈A-4. Modifications of First to Third Preferred Embodiments〉

(1) In the first or second preferred embodiment, in order to form single-crystalline thin film of GaN, for example, a polycrystalline GaN film may be first grown on an Si substrate by general CVD. Thereafter, by use of the apparatus 101, for example, N_2 (nitrogen) gas or NH_3 (ammonia) gas containing N atoms

may be introduced into the inert gas inlet pipe 7, to irradiate the GaN thin film with a molecular flow of the gas or a dissociated N atom current. N atoms which may remain in the interior of GaN are assembled into the single crystal as an element forming GaN, and hence there is no possibility of exerting a bad influence on properties of GaN.

(2) In the first or second preferred embodiment, in order to form a GaAs single-crystalline thin film, a GaAs polycrystalline thin film may be first grown on an Si substrate by general molecular beam epitaxy, so that conditions identical to those for forming an Si single-crystalline thin film are employed except that the substrate temperature is maintained at 500 °C, the gas as applied is prepared from low-priced Ar gas and the reflector is prepared from a Ta plate. It was possible to obtain a GaAs single-crystalline thin film by this method.

(3) In the third preferred embodiment, in order to form single-crystalline thin film of GaN, for example, N_2 (nitrogen) gas or NH_3 (ammonia) gas containing N atoms may be introduced into the inert gas inlet pipe 7 of the apparatus 100, to irradiate the GaN thin film with a molecular flow of the gas or a dissociated N atom current. Nitrogen which may remain in the interior of GaN is assembled into the single crystal as an element forming GaN, and hence there is no possibility of exerting a bad influence on properties of GaN.

(4) In place of the reflector 12, ECR ion generators 2 may be provided in a number corresponding to that of components of an atom current which is applied to the thin film, to directly apply the atom current from the ECR ion generators 2 to the thin film. As compared with this method, however, the method shown in Fig. 4 or Fig. 13 employing a single ECR ion generator 2 and a single reflector 12 is superior since the apparatus can be simplified in structure and it is possible to maintain a high degree of vacuum in the reaction chamber 8.

In the apparatus 100, further, the ECR ion generator 2 also serves as an energy source which is required for providing energy to the reaction gas for carrying out plasma CVD. Namely, the method shown in Fig. 13 employing a single ECR ion generator 2 and a single reflector 12 has a specific advantage such that the same can be carried out by simply adding the reflector 12 to a structure which is originally necessary for carrying out plasma CVD.

(5) The ECR ion generator 2 may be replaced by another ion source such as a Cage type or Kaufmann type one. In this case, however, flow of the as-formed ion current is inclined to be diffused by repulsion caused by static electricity between ions, leading to reduction of directivity. Therefore, it is desirable to provide means for neutralizing ions and converting the same to an atom current or means for improving the directivity such as a collimator in a path of the ion current. When an electrical insulating substrate is employed as the substrate 11, in particular, it is desirable to provide the means for neutralizing ions in order to prevent the progress of irradiation from being disabled due to storage of charges in the substrate 11. Alternatively, the reflector 12 may be made of a conductive material such as a metal, to simultaneously carry out reflection of the ion current and conversion to a neutral atom current.

In the aforementioned method employing the ECR ion generator 2, on the other hand, a neutral atom current can be easily obtained in a form close to a parallel current with no employment of means for neutralizing the ion current. Therefore, the thin film can be easily irradiated with an atom current having high incidence angle accuracy. Since a neutral atom current is mainly incident upon the thin film, further, the substrate 11 can be prepared from an insulating substrate such as an SiO_2 substrate.

〈A-5. Fourth Preferred embodiment〉

Next, an apparatus according to a fourth preferred embodiment of the present invention is described.

Fig. 14 is a front sectional view showing the overall structure of an axially oriented polycrystalline thin film forming apparatus 122 according to the fourth preferred embodiment. This apparatus 122 is adapted to grow a thin film of a prescribed material on a substrate and to simultaneously convert the thin film to a uniaxially oriented polycrystalline thin film, thereby forming an axially oriented polycrystalline thin film on the substrate. This apparatus 122 is characteristically different from the apparatus 100 shown in Fig. 13 in that a reflector 12 is not provided therein.

Referring to Fig. 14, the operation of the apparatus 122 is now described. It is assumed that the substrate 11 is prepared from polycrystalline SiO_2 (quartz), so that a thin film of single-crystalline Si is formed on the quartz substrate 11. The reaction gas supply tubes 13a, 13b and 13c supply SiH_4 (silane) gas for supplying Si, which is a main material for the single-crystalline Si, and B_2H_3 (diborane) gas and PH_3 (phosphine) gas for doping the substrate 11 with p-type and n-type impurities respectively. The inert gas introduced from the inert gas inlet pipe 7 is preferably prepared from Ne gas, which has smaller atomic weight than Si atoms and is inert gas.

Due to the action of the ECR ion generator 2, an Ne^+ ion current and an electron current are formed downwardly from the outlet 9. The distance between the outlet 9 and the substrate 11 is preferably set at a value which is sufficient for converting most part of the Ne^+ ion current to a neutral Ne atom current. The silane gas which is supplied from the reaction gas supply tube 13a is dashed against the substrate 11 by the Ne^+ ion current or the Ne atom current. Consequently, a plasma CVD reaction progresses on the upper surface of the substrate 11, to grow a thin film formed by Si which is supplied by the silane gas, i.e., an Si thin film. On the other hand, the diborane gas or the phosphine gas is supplied with a properly adjusted flow rate, whereby a plasma CVD reaction caused by this gas also progresses to form the Si thin film containing B (boron) or P (phosphorus) in desired density.

The substrate 11 is not heated and hence maintained substantially at an ordinary temperature. Therefore, the Si thin film is grown substantially under the ordinary temperature. In other words, the Si thin film is formed at a temperature not more than a level facilitating crystallization by plasma CVD. Thus, the Si thin film is first formed as an amorphous Si film by plasma CVD.

The aforementioned downwardly directed Ne atom current is perpendicularly incident upon the upper surface of the substrate 11. Namely, the Si thin film being formed on the upper surface of the substrate 11 is irradiated with the Ne atom current which is linearly discharged from the outlet 9.

The energy of the plasma which is formed by the ECR ion source 2 is so set that the energy of Ne atoms reaching the substrate 11 is at a value causing no sputtering in the Si thin film, i.e., lower than the threshold energy (= 27 eV) in sputtering of Si by irradiation with Ne atoms. Therefore, the so-called law of Bravais acts on the amorphous Si thin film as being grown. Namely, the Si atoms in the amorphous Si are rearranged so that a plane which is perpendicular to the direction of incidence of the Ne atom current applied to the amorphous Si defines the densest crystal plane, i.e., the (111) plane.

In other words, the amorphous Si thin film being grown by plasma CVD is sequentially converted to a polycrystalline Si thin film in which directions of crystal axes perpendicular to a single densest plane are regulated in a direction perpendicular to the surface of the substrate 11, i.e., a uniaxially oriented polycrystalline crystalline Si thin film. Consequently, a polycrystalline Si thin film is formed on the substrate 11, so that a (111) plane is exposed on the surface of any crystal grain forming this polycrystalline structure.

The diborane gas or the phosphine gas is supplied by the reaction gas supply pipe 13b or 13c simultaneously with the silane gas, thereby forming a p-type or n-type uniaxially oriented polycrystalline Si thin film containing B or P.

In the apparatus 122, portions which may be irradiated with the Ne atom current or the Ne ion current before neutralization, such as the inner wall of the reaction vessel 1 and the upper surface of the sample holder 10, for example, are made of materials causing no sputtering by the irradiation. In other words, the same are made of materials having higher threshold energy values than the energy of the Ne ion current. Therefore, no sputtering is caused in these members by irradiation with the Ne atom current or the Ne ion current, whereby the thin film is prevented from contamination with material elements forming these members. Further, these members are prevented from damage caused by sputtering.

Since the energy of the Ne ion current is set to be lower than the threshold energy in the Si thin film to be formed, the reaction vessel 1, the sample holder 10 and the like may be made of materials, such as Ta, W, Pt and the like shown in Table 2, for example, having threshold energy values which are higher than that of the Si thin film in Ne irradiation. Alternatively, the surfaces of these members, such as the inner wall of the reaction vessel 1 and the surface of the sample holder 10, for example, may be coated with materials such as Ta having high threshold energy, to obtain a similar effect.

While the structure and the operation of the apparatus 122 have been described with reference to formation of an Si thin film, it is also possible to form an axially oriented polycrystalline thin film of a material other than Si. For example, it is also possible to form a GaAs thin film. In this case, reaction gases supplied from the reaction gas supply pipes 13a, 13b and 13c are prepared from reaction gases containing $Ga(CH_3)_3$ etc., which are suitable for formation of GaAs. While GaAs is a compound consisting of two elements, an element for forming the ion current or the atom current as applied may be prepared from an element such as Ne or Ar, for example, which is lighter than As having larger atomic weight in these two elements. The irradiation energy is similarly set to be lower than the threshold energy which is related to As having large atomic weight.

When the thin film to be formed is made of a plurality of elements, the element forming the ion current or the atom current as applied may be prepared from that which is lighter than that having the maximum atomic weight among the plurality of elements, in general. The irradiation energy is similarly set to be lower than threshold energy which is related to the element having the maximum atomic weight. In this case, the surface of the member such as the sample holder 10 which is irradiated with the ion current or the atom

current in the apparatus 122 may be made of a material having higher threshold energy than the material for the thin film.

Alternatively, the surface may be made of the same material as the thin film. When the apparatus 122 is structured as that for forming an axially oriented polycrystalline thin film of Si, for example, the surface of the sample holder 10 etc. may be coated with Si. In this case, no contamination of the Si thin film is caused by a different element even if sputtering is caused in the sample holder 10 or the like.

Further, the surface of the member such as the sample holder 10 which is irradiated with the ion current or the atom current may be made of a material containing an element which is heavier than that forming the ion current or the atom current as applied. In this case, the element forming the ion current or the atom current hardly penetrates into the member following application of the ion current or the atom current. Thus, deterioration of the member caused by penetration of a different element is suppressed.

In the apparatus 122, conversion to a uniaxially oriented polycrystalline film sequentially progresses simultaneously with growth of the Si thin film by plasma CVD. Thus, it is possible to form an axially oriented polycrystalline Si thin film having a large film thickness under a low temperature. Since the axially oriented polycrystalline thin film can be formed under a low temperature, it is possible to form a uniaxially oriented crystalline thin film on a substrate which is already integrated with a prescribed device, for example, without changing characteristics of this device.

In the above description, the substrate 11 is horizontally placed on the sample holder 10, whereby the atom current is perpendicularly incident upon the substrate 11. When an axially oriented polycrystalline thin film of Si, for example, is formed on the substrate 11, therefore, the surface of the thin film is defined by a (111) plane. However, it is also possible to form an axially oriented polycrystalline thin film of Si in which (111) planes are uniformly oriented in a desired direction which is inclined with respect to the surface of the thin film, by placing the substrate 11 on the sample holder 10 in an inclined manner.

The sample holder 10 may be coupled to a rotary mechanism or the like, to be capable of horizontally rotating the substrate 11. Alternatively, the sample holder 10 may be coupled to a horizontal moving mechanism or the like, to be capable of horizontally moving the substrate 11. Thus, it is possible to uniformly form a uniaxially oriented thin film on the substrate 11.

⟨A-1-4. Valid Data⟩

Description is now made on a test verifying formation of an axially oriented polycrystalline thin film by the aforementioned method. Fig. 15 illustrates experimental data showing an electron beam diffraction image of a sample comprising an axially oriented polycrystalline Si thin film formed on a polycrystalline quartz substrate 11 on the basis of the aforementioned method. In this verification test, the surface of the substrate 11 was perpendicularly irradiated with an Ne atom current.

As shown in Fig. 15, a diffraction spot appears on a single point, and is continuously distributed along a circumference around the same. Namely, the result of the experiment indicates that a single (111) plane of the Si thin film as formed is oriented to be perpendicular to the direction of incidence of the atom current, while orientation around the direction of incidence is arbitrary and not regulated in one direction. Namely, it is verified that this sample is formed as polycrystalline Si in which only a single crystal axis is regulated, i.e., as axially oriented polycrystalline Si.

Since it was possible to form an axially oriented polycrystalline Si thin film on the quartz substrate 11 having a polycrystalline structure which is higher in regularity in atom arrangement than an amorphous structure, it can be decided possible to form an axially oriented polycrystalline thin film on a substrate having an amorphous structure of amorphous Si or the like, as a matter of course. It can also be decided possible to form an axially oriented polycrystalline thin film on a substrate having a single-crystalline structure which is equivalent to a structure obtained by enlarging polycrystal grains, similarly to the above.

⟨A-6. Fifth Preferred embodiment⟩

A fifth preferred embodiment of the present invention is now described.

⟨A-6-1. Overall Structure of Apparatus⟩

Fig. 16 is a front sectional view showing the overall structure of an apparatus 120 according to the fifth preferred embodiment. This apparatus 120 is, similarly to the apparatus 100 shown in Fig. 13, an apparatus for forming single-crystalline thin film which is adapted to grow a thin film of a prescribed material on a substrate and to simultaneously convert the thin film to a single-crystalline thin film, thereby forming a

single-crystalline thin film on the substrate. This apparatus 120 is characteristically different from the apparatus 100 shown in Fig. 13 in structure of the reflector 12. Furthermore, each part of the apparatus 103 is composed of specific materials, as described later.

The reflector 12e is adapted to reflect an atom current which is supplied from an ECR ion source 2, thereby irradiating a substrate 11 with the atom current from a plurality of directions. Therefore, the reflector 12e is set to be located immediately under an outlet 9 above the substrate 11.

⟨A-6-2. Structure and Function of Reflector⟩

Fig. 17 is a perspective view showing a preferable example of the reflector 12e. Fig. 18 is a plan view of the reflector 12e shown in Fig. 17, and Figs. 19 and 20 are exploded views. With reference to these figures, the example of the reflector 12e is now described.

This reflector 12e is an exemplary reflector for forming a single crystal such as single-crystalline Si, having a diamond structure. The reflector 12e defines an equilateral hexagonal opening in a central portion of a flat plate type screen plate 151. Three reflecting blocks 153 are fixedly provided on a lower surface of the screen plate 151, to enclose the opening. These reflecting blocks 153 are fastened to the screen plate 151 by screws passing through holes 157 to be fitted with screw holes 158. Consequently, an equilateral triangular opening 154 which is trimmed with these reflecting blocks 153 is defined immediately under the opening of the screen plate 151.

The atom current which is applied from above is selectively screened by the screen plate 151, to pass only through the equilateral hexagonal opening. In the reflecting blocks 153, slopes 154 facing the opening 154 serve as reflecting surfaces for reflecting the gas beam. As shown in Fig. 18 in a plan view, the three slopes 155 are selectively exposed on the equilateral hexagonal opening of the screen plate 151 respectively. Therefore, the atom current which is applied from above is divided into four components in total including a first component passing through the opening 154 to be directly perpendicularly incident upon the substrate 11 and second to fourth components reflected by the three slopes 155 respectively to be incident upon the substrate 11 from oblique directions.

As shown in Fig. 18, each of three corners of the equilateral triangular opening 154 coincides with every other corner of the equilateral hexagonal opening, as viewed from above. In other words, the three slopes 155 are selectively exposed on three isosceles triangles having adjacent pairs of sides of the equilateral hexagonal opening as isosceles sides. This prevents multiple reflection by the plurality of slopes 155, while enabling uniform irradiation of the substrate 11 with the respective atom current components. This is now described with reference to Figs. 21 and 22.

Fig. 21 is a plan view of the reflector 12e, which is similar to Fig. 18. Fig. 22 is a sectional view taken along the line A - A in Fig. 21. As shown in Figs. 21 and 22, an atom current which is incident upon a position (B in the figures) on one slope 155 corresponding to the apex of the equilateral triangle is reflected and then incident upon an opposite apex (C in the figures) of the equilateral triangular opening 154. Assuming that D represents an intersection between one side of the opening 154 and the line A - A, an atom current which is applied across the points B and D on the slope 155 is uniformly distributed across the points D and C of the opening 154.

This also applies to an atom current which is applied onto an arbitrary line E - E deviating in parallel with the line A - A. Namely, the atom current which is discharged from the outlet 9 is selectively supplied onto the slopes 155 by the screen plate 151, whereby as-reflected atom currents of three components are uniformly incident upon a region of the substrate 11 which is located immediately under the opening 154.

Each atom current which is supplied to one slope 155 through the equilateral hexagonal opening is entirely incident upon the opening 154, and is not incident upon the adjacent slope 155. Thus, no components multiplexly reflected by the plurality of slopes 155 are incident upon the substrate 11.

The angle of inclination of each slope 155 is set at 55°, for example, as shown in Fig. 22. The atom current which is reflected by each slope 155 is incident upon the substrate 11 which is located immediately under the opening 154 at an angle of incidence of 70°. Namely, the first component is perpendicularly incident upon the substrate 11, while the second to fourth components are incident upon the same at angles of incidence of 70° in directions which are three-fold symmetrical about the direction of incidence of the first component. At this time, the directions of incidence of the first to fourth components correspond to four directions which are perpendicular to four (111) planes, being densest planes of the Si single crystal.

(A-6-3. Operation of Apparatus)

Referring again to Fig. 16, the operation of the apparatus 120 is now described. It is assumed that the reflector 12e is prepared from that shown in Figs. 17 to 20, and the substrate 11 is prepared from polycrystalline SiO_2 (quartz), so that a thin film of single-crystalline Si is formed on the quartz substrate 11. It is also assumed that the slopes 155 in the reflector 12e are set at 55°.

Reaction gas supply pipes 13a, 13b and 13c supply SiH_4 (silane) gas for supplying Si, which is a main material for the single-crystalline Si, and B_2H_3 (diborane) gas and PH_3 (phosphine) gas for doping the substrate 11 with p-type and n-type impurities respectively. Inert gas which is introduced from an inert gas inlet pipe 7 is preferably prepared from Ne gas, which has smaller atomic weight than Si atoms.

Due to the action of an ECR ion generator 2, an Ne^+ ion current and an electron current are formed downwardly from the outlet 9. The distance between the outlet 9 and the reflector 12e is preferably set at a value sufficient for converting most part of the Ne^+ ion current to a neutral Ne atom current.

Thus, a plasma CVD reaction progresses on the upper surface of the substrate 11 similarly to the apparatus 122 shown in Fig. 13, to grow an amorphous Si thin film. On the other hand, the diborane gas or the phosphine gas is supplied with a properly adjusted flow rate, whereby a plasma CVD reaction caused by this gas also progresses to form the Si thin film containing B (boron) or P (phosphorus) in desired density.

At the same time, the amorphous Si thin film which is being formed on the substrate 11 is irradiated with the four components of the Ne atom current, by the action of the reflector 12e. As hereinabove described, directions of incidence of these four components correspond to directions which are perpendicular to four (111) planes of an Si single crystal. Similarly to the apparatus 122, further, the energy of plasma which is formed by the ECR ion source 2 is so set that the energy of Ne atoms reaching the substrate 11 is at a value causing no sputtering in the Si thin film, i.e., lower than the threshold energy (= 27 eV) in sputtering of Si by irradiation with Ne atoms. Therefore, the amorphous Si thin film being grown by plasma CVD is sequentially converted to a single-crystalline Si thin film having a regulated crystal orientation, similarly to the apparatus 100. Consequently, a single-crystalline Si thin film having a regulated crystal orientation is finally formed on the substrate 11. This single-crystalline Si thin film has a (111) plane on its surface.

In the apparatus 120, due to employment of the reflector 12e, no multiple reflection of the atom current is caused by the plurality of slopes 155. Thus, the substrate 11 is irradiated with no atom current from a direction other than the prescribed four directions. Further, the reflector 12e implements uniform irradiation of the substrate 11 with the atom current, whereby the substrate 11 is uniformly irradiated with the atom current from the prescribed four directions. Thus, the single-crystalline Si thin film is uniformly formed on the substrate 11.

In the apparatus 120, portions which may be irradiated with the Ne atom current or an Ne ion current before neutralization, such as the reflector 12e, the inner wall of the reaction vessel 1 and the sample holder 10, for example, are made of materials causing no sputtering by the irradiation, i.e., materials having higher threshold energy values than the energy of the Ne ion current, such as Ta, W, Pt or the like shown in Table 2, for example. Therefore, no sputtering is caused in these members by irradiation with the Ne atom current or the Ne ion current, whereby the thin film is prevented from contamination with material elements forming these members.

Alternatively, surfaces of the members irradiated with the Ne atom current such as the upper surface of the screen plate 151 and the slopes 155 may be coated with materials such as Ta having high threshold energy, to attain a similar effect.

While the structure and the operation of the apparatus 120 have been described with reference to formation of an Si thin film, it is also possible to form an axially oriented polycrystalline thin film of a material other than Si. For example, it is also possible to form a GaAs thin film. It is possible to form a single-crystalline thin film of an arbitrary material having a desired crystal structure and a desired crystal orientation by properly changing the structure of the reflector 12e such as the angles of inclination and the number of the slopes 155. The surface of the reflector 12e etc. is made of a material having higher threshold energy than that of the thin film.

Alternatively, the surface of the reflector 12e etc. may be made of the same material as that for the thin film. When the apparatus 120 is structured as an apparatus for forming a single-crystalline thin film of Si, for example, the surface of the reflector 12e etc. may be coated with Si. In this case, no contamination of the Si thin film is caused by a different element even if sputtering is caused in the reflector 12e or the like.

Further, the surface of the reflector 12e etc. may be made of a material containing an element which is heavier than that forming the ion current or the atom current as applied. Thus, the element forming the ion

current or the atom current hardly penetrates into the members following irradiation with the ion current or the atom current. Thus, these members are inhibited from deterioration caused by penetration of the different element.

〈A-7. Sixth Preferred Embodiment〉

An apparatus according to a sixth preferred embodiment of the present invention is now described. Figure 13 is a front sectional view showing the overall structure of the apparatus 121 according to this preferred embodiment. This apparatus 121 is, similarly to the apparatus 101 shown in Fig. 4, a single-crystalline thin film forming apparatus, which is adapted to previously form a thin film of a prescribed material having an amorphous or polycrystalline structure on a substrate and to thereafter convert the thin film to a single-crystalline thin film, thereby forming a single-crystalline thin film on the substrate.

This apparatus 121 is characteristically different from the apparatus 101 in structure of the reflector 12e. Furthermore, each part of the apparatus 121 is composed specific materials, as described later. A sample holder 10, which comprises a heater (not shown), can heat a substrate 11 to hold the same at a proper high temperature.

Referring to Fig. 23, the basic operation of the apparatus 121 is now described. It is assumed that a reflector 12e is implemented by that shown in Figs. 17 to 20 and the substrate 11 is prepared from a polycrystalline quartz substrate, so that a single-crystalline Si thin film is formed on the quartz substrate 11. It is also assumed that a polycrystalline Si thin film is previously formed on the quartz substrate 11 by a well-known method such as CVD (chemical vapor deposition).

First, the substrate 11 is mounted between the sample holder 10 and the reflector 12e. The heater provided in the sample holder 10 holds the substrate 11 at a temperature of 550 °C. Since this temperature is lower than the crystallization temperature of silicon, single-crystalline Si once formed will not return to polycrystalline Si under this temperature. At the same time, this temperature is so high that polycrystalline Si can be grown into single-crystalline Si from a nuclear of a seed crystal.

For the same reason as that described in relation to the fourth preferred embodiment, an Ne atom current is selected as an atom current to be applied to the substrate 11, and energy of Ne plasma which is formed by an ECR ion source 2 is so set that energy of Ne atoms reaching the substrate 11 is lower than threshold energy in sputtering of Si. Further, the polycrystalline Si thin film which is formed on the substrate 11 is irradiated with four components of the Ne atom current by the action of the reflector 12e. Directions of incidence of these four components correspond to those perpendicular to four (111) planes of the Si single crystal.

Therefore, the overall region of the polycrystalline Si thin film is converted to a single-crystalline Si layer similarly to the apparatus 101. Thus, a single-crystalline Si layer having a regulated crystal orientation is formed on the quartz substrate 11.

In the apparatus 121, due to employment of the reflector 12e, no multiple reflection of the atom current is caused by the plurality of slopes 155. Thus, the substrate 11 is irradiated with no atom current from a direction other than the prescribed four directions. Further, the reflector 12e implements uniform irradiation of the substrate 11 with the atom current, whereby the substrate 11 is uniformly irradiated with the atom current from the prescribed four directions. Thus, the single-crystalline Si thin film is uniformly formed on the substrate 11.

Similarly to the apparatus 120, portions which may be irradiated with the Ne atom current or an Ne ion current before neutralization, such as the reflector 12e, the inner wall of a reaction vessel 1 and the sample holder 10, for example, are made of materials causing no sputtering by the irradiation such as Ta, W, Pt or the like shown in Table 2, for example, also in the apparatus 121. Therefore, no sputtering is caused in these members by irradiation with the Ne atom current or the Ne ion current, whereby the thin film is prevented from contamination with material elements forming these members.

While the structure and the operation of the apparatus 121 have been described with reference to formation of an Si thin film, it is also possible to form an axially oriented polycrystalline thin film of a material other than Si with the apparatus 121. For example, it is also possible to form a GaAs thin film. Also in this case, the surface of the reflector 12e etc. is made of a material having higher threshold energy than that forming the thin film. Alternatively, the surface of the reflector 12e etc. may be made of the same material as that for the thin film, similarly to the apparatus 120. Further, the surface of the reflector 12e etc. may be made of a material containing an element which is heavier than that forming the ion current or the atom current as applied.

(A-8. Seventh Preferred Embodiment)

An apparatus according to a seventh preferred embodiment of the present invention is now described. Fig. 24 is a front sectional view showing the overall structure of the apparatus 123 according to this preferred embodiment. This apparatus 123 is an axially oriented polycrystalline thin film forming apparatus which is adapted to previously form a thin film of a prescribed material having an amorphous or polycrystalline structure on a substrate and to thereafter convert the thin film to an axially oriented polycrystalline thin film, thereby forming an axially oriented polycrystalline thin film on the substrate.

As shown in Fig. 24, this apparatus 123 has such a structure that the reflector 12e is removed from the apparatus 121 (Fig. 23). Similarly to the apparatus 121, a sample holder 10 comprises a heater (not shown), which can heat a substrate 11 to hold the same at a proper high temperature.

Referring to Fig. 24, the basic operation of the apparatus 123 is now described. It is assumed that the substrate 11 is prepared from a polycrystalline quartz substrate, so that an axially oriented polycrystalline Si thin film is formed on the quartz substrate 11. It is also assumed that a polycrystalline Si thin film is previously formed on the quartz substrate 11 by a well-known method such as CVD (chemical vapor deposition). This polycrystalline Si thin film may have such an ordinary polycrystalline structure that respective crystal grains are oriented in arbitrary directions.

First, the substrate 11 is mounted on the sample holder 10. The heater provided in the sample holder 10 holds the substrate 11 at a temperature of 550 °C. Since this temperature is lower than the crystallization temperature of silicon, axially oriented polycrystalline Si once formed will not return to ordinary polycrystalline Si under this temperature. At the same time, this temperature is so high that ordinary polycrystalline Si can be grown into axially oriented polycrystalline Si from a nuclear of a seed crystal.

An ion current passing through an outlet 9 is converted to an atom current, which in turn is perpendicularly incident upon the surface of the substrate 11. For the same reason as that described in relation to the seventh preferred embodiment, an Ne atom current is selected as the atom current to be applied to the substrate 11, and energy of Ne plasma which is formed by an ECR ion source 2 is so set that energy of Ne atoms reaching the substrate 11 is lower than threshold energy in sputtering of Si.

Thus, the law of Bravais acts in a portion close to the surface of the polycrystalline Si thin film, whereby the Si atoms are rearranged in a portion close to the surface of the polycrystalline Si thin film so that a surface perpendicular to the direction of incidence of the Ne atom current which is applied to the polycrystalline Si thin film defines the densest crystal plane. Namely, a layer close to the surface of the polycrystalline Si tin film is converted to an axially oriented polycrystalline Si layer whose uniaxial direction is regulated so that the (111) plane is along its surface.

The temperature of the polycrystalline Si thin film is adjusted at 550 °, i.e., within a range suitable for growing a seed crystal, as described above. Thus, the axially oriented polycrystalline Si layer which is formed on the surface of the ordinary polycrystalline Si thin film serves as a seed crystal, to grow the axially oriented polycrystalline Si layer toward a deep portion of the ordinary polycrystalline Si thin film. Then, the overall region of the polycrystalline Si thin film is converted to an axially oriented polycrystalline Si layer. Thus, an axially oriented polycrystalline Si layer which is so oriented that the (111) plane is along its surface is formed on the quartz substrate 11.

Alternatively, an amorphous Si thin film may be previously formed on the substrate 11 in place of the ordinary polycrystalline Si thin film to be thereafter treated with the apparatus 123, thereby forming an axially oriented polycrystalline Si thin film.

Also in the apparatus 123, portions which may be irradiated with the Ne atom current or an Ne ion current before neutralization, such as at least surfaces of the inner wall of a reaction vessel 1 and the sample holder 10, for example, are made of materials causing no sputtering by the irradiation, such as Ta, W, Pt or the like shown in Table 2, for example, similarly to the apparatus 122. Therefore, no sputtering is caused in these members by irradiation with the Ne atom current or the Ne ion current, whereby the thin film is prevented from contamination with material elements forming these members.

While the structure and the operation of the apparatus 123 have been described with reference to formation of an Si thin film, it is also possible to form an axially oriented polycrystalline thin film of a material other than Si by the apparatus 123. For example, it is also possible to form a GaAs thin film. Also in this case, the surface of the sample holder 10 etc. is made of a material having higher threshold energy than that of the thin film. Alternatively, the surface of the sample holder 10 etc. may be made of the same material as that for the thin film, similarly to the apparatus 122. Further, the surface of the sample holder 10 etc. may be made of a material containing an element which is heavier than that forming the ion current or the atom current as applied.

(A-9. Eighth Preferred Embodiment)

An eighth preferred embodiment of the present invention is now described. A method according to this preferred embodiment is adapted to form an axially oriented polycrystalline thin film on a substrate 11 and to thereafter convert the same to a single-crystalline thin film by irradiating the film with atom currents from a plurality of directions, thereby forming a single-crystalline thin film on the substrate 11. To this end, the apparatus 122 according to the fourth preferred embodiment may be employed to form an axially oriented polycrystalline thin film on the substrate 11, so that this thin film is converted to a single-crystalline thin film through the apparatus 121 according to the seventh preferred embodiment, for example.

Alternatively, the apparatus 120 according to the eighth preferred embodiment may be employed to form an axially oriented polycrystalline thin film by executing supply of reaction gas and application of an atom current at first while removing the reflector 12e, so that the reflector 12e is thereafter set in the apparatus 120 to execute application of an atom current while heating the substrate 11 for converting the thin film to a single-crystalline thin film, thereby forming a single-crystalline thin film on the substrate 11.

Alternatively, a thin film having an amorphous structure or an ordinary polycrystalline structure may be previously formed on the substrate 11 by CVD or the like so that the thin film is thereafter converted to an axially oriented polycrystalline thin film through the apparatus 123 and thereafter the film is further converted to a single-crystalline thin film through the apparatus 121, thereby forming a single-crystalline thin film on the substrate 11.

Thus, in the method according to this preferred embodiment, an axially oriented polycrystalline thin film is previously formed before a single-crystalline thin film is formed on the substrate 11. Even if a portion which is hard to form a single-crystalline thin film is present on the substrate 11, therefore, mechanical and electrical properties of the thin film are not remarkably deteriorated since the portion is provided with an axially oriented polycrystalline thin film having characteristics which are close to those of a single-crystalline thin film. Namely, it is possible to obtain a thin film having properly excellent characteristics without precisely executing a step of forming a single-crystalline thin film.

This is particularly effective when it is difficult to uniformly irradiate a prescribed region of the substrate 11 with atom currents from a plurality of directions since the substrate 11 is not in the form of a flat plate but is in the form of a cube, or a screen having a thickness is formed on the surface of the substrate 11. Figs. 25 to 27 show such examples.

Fig. 25 is a sectional view typically illustrating such a state that the surface of a sample 170 comprising a substrate 11 having a cubic shape and an axially oriented polycrystalline Si thin film 171 previously formed thereon is irradiated with Ne atom currents from two directions. As shown in Fig. 25, the sample 170 has a cubic shape and hence the sample 170 itself serves as a screen for the atom currents. Consequently, a specific region of the axially oriented polycrystalline Si thin film 171 is irradiated with the Ne atom current from only one direction, and no irradiation from two directions is implemented.

Figs. 26 and 27 are sectional views typically showing steps of selectively forming a single-crystalline Si thin film on a substrate 11 through a masking member 172 in a process of fabricating a thin-film semiconductor integrated circuit. An amorphous or ordinary polycrystalline Si thin film 174 is previously formed on the substrate 11 by CVD or the like. Thereafter the apparatus 123 is employed to perpendicularly irradiate the upper surface of the Si thin film 174 with an Ne atom current through an opening of the masking member 172 which is made of SiO_2 or the like, thereby selectively forming an axially oriented polycrystalline Si thin film 171 immediately under the opening of the masking member 172 (Fig. 26).

Then, the apparatus 121 is employed to irradiate the upper surface of the Si thin film 171 with Ne atom currents from a plurality of directions through the opening of the masking member 172, thereby converting the axially oriented polycrystalline Si thin film 171 to a single-crystalline Si thin film (Fig. 27). At this time, a portion close to an edge of the opening of the masking member 172 is not sufficiently irradiated with the Ne atom currents from the plurality of directions since the masking member 172 has a constant thickness. Thus, the single-crystalline Si thin film is hardly formed in the portion close to the edge of the opening of the masking member 172. However, at least the axially oriented polycrystalline Si thin film is provided in this portion even if no single-crystalline Si thin film is formed, whereby it is possible to minimize deterioration of electrical properties such as carrier mobility.

In the method according to this preferred embodiment, one of the plurality of directions of incidence of the atom currents which are applied to carry out conversion to a single-crystalline thin film is preferably coincident with the direction of incidence of the atom current which is applied in advance for forming the axially oriented polycrystalline thin film. In this case, conversion to a single-crystalline thin film is carried out without changing the common uniaxial direction in the axially oriented polycrystalline thin film, whereby the step of conversion to a single-crystalline thin film smoothly progresses in a short time.

⟨A-10. Ninth Preferred Embodiment⟩

A ninth preferred embodiment of the present invention is now described.

⟨A-10-1. Structure of Apparatus⟩

Fig. 28 is a front sectional view showing the overall structure of an apparatus 124 according to this preferred embodiment. This apparatus 124 is adapted to convert an amorphous, polycrystalline, or axially oriented polycrystalline thin film which is previously formed on a substrate 11 to a single-crystalline thin film, thereby forming a single-crystalline thin film on the substrate 11.

This apparatus 124 is characteristically different from the apparatus 121 in a point that a reflecting unit 160 is set in place of the reflector 12e. The reflecting unit 160, which is adapted to generate a plurality of atom current components to be incident upon the substrate 11 at a plurality of prescribed angles of incidence, is set on a sample holder 10, to be located above the substrate 11. The sample holder 10 comprises a heater (not shown), which can heat the substrate 11 to maintain the same at a proper high temperature.

⟨A-10-2. Structure and Operation of Reflecting Unit⟩

The structure and the operation of the reflecting unit 160 are now described. Figs. 29 and 30 are a front sectional view and a plan sectional view showing the structure of the reflecting unit 160 respectively. The reflecting unit 160 illustrated in Figs. 29 and 30 is adapted to form a single crystal of a diamond structure such as single-crystalline Si. This reflecting unit 160 is arranged directly under an ion outlet 9 of an ECR ion source 2, i.e., downstream an atom current which is generated by the ECR ion source 2 to be downwardly directed.

A screen plate 164 which can selectively screen the atom current supplied from the ECR ion source 2 is horizontally provided on an upper portion of the reflecting unit 160. The reflecting unit 160 is so set that a distance between the outlet 9 and this screen plate 164 is at a sufficient value, such as at least 14 cm, for example, for converting an ion current outputted from the ECR ion source 2 to a neutral atom current. Namely, a substantially neutral atom current reaches the screen plate 164. Openings 162 are provided in this screen plate 164, to be in four-fold rotation symmetry about a central axis of the atom current from the ECR ion source 2. The atom current from the ECR ion source 2 passes only through the openings 162, to further flow downwardly.

A reflecting block 166 is set immediately under this screen plate 164. This reflecting block 166 is in the form of a four-fold rotary-symmetrical cone whose symmetry axis is coincident with the central axis of the atom current, and four side surfaces of the cone are located immediately under the four openings 162 respectively. These side surfaces are not necessarily plane, but are curved in general. These four side surfaces serve as reflecting surfaces for reflecting the atom current. Namely, the atom current passing through the openings 162 is reflected by the four side surfaces of the reflecting block 166, whereby four atom current components progressing toward directions separated from the central axis are obtained.

These four atom current components are divergent beams whose beam sections are two-dimensionally (planarly) enlarged. These four components pass through a rectifying member (rectifying means) 168 so that directions of progress thereof are accurately regulated in desired directions, to be thereafter incident upon four reflectors 169 respectively. The rectifying member 168, which is adapted to regulate the directions of the atom current components radially from the side surfaces of the reflecting block 166 toward the reflecting plates 169, can be formed by a well-known technique.

These four reflectors 169 are arranged around the substrate 11, which is the target of irradiation, to be four-fold rotation symmetrical about the symmetry axis of the reflecting block 166 (Fig. 30 typically shows only one reflector 169. Fig. 30 also illustrates only an atom current which is incident upon and reflected by an upper half portion of the single reflector 169). The atom current component which is incident upon each reflector 169 is again reflected by its reflecting surface. The reflecting surface of each reflector 169 has a shape of a proper concave surface. Therefore, the divergent atom current components are reflected by the reflecting surfaces and properly focused as the result, to form parallel beams which are uniformly applied to the overall upper surface of the substrate 11. Further, the parallel beams are incident upon the upper surface of the substrate 11 from four directions at angles of incidence of 55°, for example.

(A-10-3. Operation of Apparatus 124)

Referring to Fig. 28, the operation of the apparatus 124 is now described. It is assumed that the substrate 11 is prepared from an amorphous or polycrystalline SiO_2 (quartz) substrate, so that a single-crystalline Si thin film (which includes an axially oriented polycrystalline Si thin film) is formed on the quartz substrate 11. A polycrystalline Si thin film is previously formed on the quartz substrate 11 by CVD (chemical vapor deposition), for example.

First, the substrate 11 is mounted between the sample holder 10 and the reflecting unit 160. The heater provided in the sample holder 10 holds the sample, i.e., the substrate 11 and the polycrystalline Si thin film, at a temperature of 550°C. Similarly to the apparatus 121, a gas which is introduced from an inert gas inlet pipe 7 is preferably prepared from inert Ne gas having smaller atomic weight than Si atoms.

Due to the action of an ECR ion source 2, an Ne atom current is supplied to the reflecting unit 160, to be incident upon the overall upper surface of the substrate 11 from four directions at angles of incidence of 55°, for example. In this case, the directions of incidence of the four Ne atom current components correspond to four directions which are perpendicular to four independent densest crystal planes of an Si single crystal to be formed, i.e., (111) planes. Similarly to the apparatus 121, energy of plasma which is formed by the ECR ion source 2 is so set that energy of the Ne atoms reaching the substrate 11 is lower than threshold energy in sputtering of Si by irradiation with the Ne atoms.

Thus, the law of Bravais acts on the polycrystalline Si thin film, whereby the Si atoms are rearranged in a portion close to the surface of the polycrystalline Si thin film so that surfaces perpendicular to the directions of incidence of the four components of the Ne atom current which is applied to the polycrystalline Si thin film define densest crystal planes. Namely, a layer in the vicinity of the polycrystalline Si thin film is converted to a single-crystalline Si layer having a regulated crystal orientation.

The temperature of the polycrystalline Si thin film is adjusted at 550°, i.e., within a range suitable for growing a seed crystal, as described above. Thus, the single-crystalline Si layer which is formed on the surface of the polycrystalline Si thin film serves as a seed crystal, to grow the single-crystalline Si layer toward a deep portion of the polycrystalline Si thin film. After a lapse of a constant time, the overall region of the polycrystalline Si thin film is converted to a single-crystalline Si layer. Thus, a single-crystalline Si layer having a regulated crystal orientation is formed on the quartz substrate 11. The single-crystalline Si thin film as formed is so oriented that the (100) plane is along its surface.

The angle of incidence of 55° shown in Fig. 29 is a mere example as a matter of course, and it is possible to introduce parallel beams into the substrate 11 at an arbitrary angle of incidence which is decided in response to the crystal structure of the desired single-crystalline thin film by properly changing the shapes and directions of the reflectors 169. Since the divergent beams are generated by the reflecting block 166, it is possible to uniformly irradiate a wide substrate 11 with parallel beams by properly adjusting the distances between the reflectors 169 and the symmetry axis of the reflecting block 166 in response to the width of the substrate 11.

Thus, according to this apparatus 124, it is possible to uniformly irradiate the overall surface of the substrate 11 having an area which is extremely larger than the section of each beam supplied from the ECR ion source 2 with atom current components at desired angles of incidence. Namely, it is possible to uniformly and efficiently form a desired single-crystalline thin film on the substrate 11 having a large area.

Further, it is possible to independently adjust the amounts of the four component beams passing through the openings 162 by independently adjusting the areas of the four openings 162 provided in the screen plate 164. Thus, it is possible to optimumly set the respective amounts of the four component beams which are applied to the upper surface of the substrate 11 from a plurality of directions. For example, it is possible to uniformly regulate the amounts of the four component beams. Thus, a high-quality single-crystalline thin film can be efficiently formed.

Similarly to the apparatus 121, at least surfaces of respective members of the reflecting unit 160 such as the reflecting block 168, the rectifying member 168 and the reflectors 169 which are irradiated with the atom current components may be made of materials such as Ta, W, Pt or the like having higher threshold energy in sputtering than the thin film to be formed. Alternatively, the surfaces of the respective members of the reflecting unit 160 may be made of the same material as that for the thin film, similarly to the apparatus 121. Further, the surfaces of the respective members of the reflecting unit 160 may be made of a material containing an element which is heavier than that forming the ion current or the atom current as applied.

⟨A-11. Tenth Preferred Embodiment⟩

An apparatus according to a tenth preferred embodiment of the present invention is now described. Fig. 31 is a front sectional view showing the overall structure of a beam irradiator according to this preferred embodiment. This apparatus 125 is adapted to form a polycrystalline thin film on a substrate 11 and to irradiate the same with an atom current at the same time, thereby sequentially converting the polycrystalline thin film as being grown to a single-crystalline thin film, similarly to the apparatus 120.

To this end, a reaction chamber 8 communicates with reaction gas supply pipes 13 in the apparatus 125, similarly to the apparatus 120. Reaction gases are supplied through the reaction gas supply pipes 13, for forming a film of a prescribed material on the substrate 11 by plasma CVD. The preferred embodiment shown in Fig. 31 is provided with three reaction gas supply pipes 13a, 13b and 13c. Other structural characteristics of this apparatus 125 are similar to those of the apparatus 124.

The apparatus 125 operates as follows: Similarly to the sixth preferred embodiment, it is assumed that the substrate 11 is prepared from polycrystalline SiO_2 (quartz), so that a thin film of single-crystalline Si is formed on the quartz substrate 11. The reaction gas supply pipes 13a, 13b and 13c supply SiH_4 (silane) gas for supplying Si, which is a main material for the single-crystalline Si, and B_2H_3 (diborane) gas and PH_3 (phosphine) gas for doping the substrate 11 with p-type and n-type impurities respectively. Ne gas is introduced from an inert gas inlet pipe 7 into a plasma chamber 4.

Due to the reaction gases supplied from the reaction gas supply pipes 13a, 13b and 13c and an Ne^+ ion current or an Ne atom current generated by an ECR ion source 2, plasma CVD reaction progresses on the upper surface of the substrate 11, thereby growing an Si thin film of an amorphous structure.

The Ne atom current downwardly flowing from the ECR ion source 2 is incident upon the overall surface of the Si thin film being formed on the upper surface of the substrate 11 from four directions having angles of incidence of 55°, for example, due to action of a reflecting unit 160. Similarly to the apparatus 120, energy of plasma which is formed by the ECR ion source 2 is so set that incident energy of the four components is lower than threshold energy with respect to Si. Thus, the law of Bravais acts on the amorphous Si thin film as being grown, whereby the amorphous Si thin film being grown by plasma CVD is sequentially converted to a single-crystalline Si thin film having a regulated crystal orientation. As the result, single-crystalline Si having a single crystal orientation is formed on the substrate 11.

Also in this apparatus 125, the reflecting unit 160 is so employed that it is possible to uniformly irradiate the overall surface of the substrate 11 having an area which is extremely larger than the section of each beam supplied from the ECR ion source 2 with atom current components at desired angles of incidence without scanning the substrate 11, due to employment of the reflecting unit 160. Namely, it is possible to uniformly and efficiently form a desired single-crystalline thin film on the substrate 11 having a large area.

⟨A-12. Eleventh Preferred Embodiment⟩

An apparatus 126 according to an eleventh preferred embodiment of the present invention is now described. Figs. 32 to 34 are a perspective view, a plan view and a front elevational view showing the apparatus 126 according to this preferred embodiment respectively. With reference to Figs. 32 to 34, the structure and the operation of the apparatus 126 according to this preferred embodiment are now described.

In this apparatus 126, an ECR ion source 2 is set in a horizontal state, to supply a gas beam in a horizontal direction which is parallel to the surface of a horizontally set substrate 11. A reflecting unit 180 is interposed in a path of the gas beam which is supplied from the ECR ion source 2 to reach the upper surface of the substrate 11.

In the reflecting unit 180, a reflecting block 186, a screen plate 184, a rectifying member 188 and a reflector 190 are successively arranged along the path of the gas beam. The reflecting block 186 is rotated/driven about its central axis which is in the form of a perpendicular prism. A distance between an outlet 9 and the reflecting block 186 is set at a sufficient length of at least 14 cm, for example, for converting an ion current which is outputted from the ECR ion source 2 to a neutral atom current. Thus, a substantially neutral atom current reaches the reflecting block 186.

Fig. 35 is a plan view for illustrating the operation of the reflecting block 186. As shown in Fig. 35, an atom current which is incident upon the reflecting block 186 is scattered to a number of directions in a horizontal plane by rotation of the reflecting block 186. Namely, the reflecting block 186 substantially generates divergent beams whose beam sections are enlarged linearly or in the form of strips, i.e., substantially one-dimensionally, with progress of the beams.

The screen plate 184 selectively passes only components of the divergent atom current having scattering angles in a specific range. The atom current components passed through the screen plate 184 are passed through the rectifying member 188, to be precisely regulated in directions of progress. The rectifying member 188 is structured similarly to the rectifying member 168. In place of the shape of a prism shown in Fig. 35, the reflecting block 186 may be in the form of a triangle pole, a hexagonal pole or the like, for example.

Referring again to Figs. 32 to 34, the atom current components passed through the rectifying member 188 are incident upon the reflector 190 which is in the form of a strip along the horizontal direction. A reflecting surface of the reflector 190 has a proper concave shape. Thus, the divergent atom current components are reflected by this reflecting surface and properly focused to form parallel beams, which are applied to the upper surface of the substrate 11 linearly or in the form of strips. Further, the parallel beams are incident upon the upper surface of the substrate 11 at angles of incidence of 35°, for example. As shown in Fig. 33, two sets of the members from the reflecting block 186 to the reflector 190 arranged along the path of the atom current are set. Thus, atom currents are incident upon the substrate 11 from opposite two directions at angles of incidence of 35° respectively.

Each atom current is scattered by each reflecting block 186 to be substantially one-dimensionally diverged, whereby it is possible to apply parallel beams to a linear or strip-shaped region having a width which is extremely larger than the diameter of the beam supplied from the ECR ion source 2 by sufficiently setting the distance between the reflecting block 186 and the reflector 190.

The apparatus 126 has a sample holder (not shown) for receiving the substrate 11, and this sample holder is horizontally movable by a horizontal moving mechanism (not shown). Following such horizontal movement of the sample holder, the substrate 11 is moved in parallel along a direction perpendicular to (intersecting with) the linear or strip-shaped region receiving the atom currents. Thus, it is possible to implement irradiation of the overall region of the substrate 11 by scanning the substrate 11. Due to such scanning of the substrate 11, it is possible to uniformly irradiate the wide substrate 11 with atom current components.

This apparatus 126 may comprise reaction gas supply pipes 13a, 13b and 13c similarly to the apparatus 120, to form a thin film of a prescribed material on the substrate 11 and to sequentially convert the thin film to a single crystal. Alternatively, the sample holder may be provided with a heater similarly to the apparatus 121, to convert a thin film of a prescribed material which is previously deposited on the substrate 11 to a single-crystalline thin film. Since the two atom currents are incident from opposite directions at the same angles of incidence of 35°, the single-crystalline thin film formed on the substrate 11 is so oriented that its (110) plane is along its surface.

It is possible to form a single-crystalline thin film which is so oriented that a crystal plane other than the (110) plane is along its surface, by changing the positional relation between the reflecting units 180, the angles of the reflectors 190 and the like. For example, it is possible to form a single-crystalline thin film which is so oriented that its (100) plane is along its surface by arranging at least two sets of reflecting units 180 so that central axes of atom currents from the reflecting blocks 186 toward the reflectors 190 are at angles of 90° or 180° and setting shapes and directions of the reflectors 190 so that angles of incidence of the atom currents incident upon the substrate 11 from the reflecting units 180 are 55°.

Further, it is possible to form a single-crystalline thin film which is so oriented that its (111) plane is along its surface by arranging at least two sets of three sets of of reflecting units 180 so that central axes of atom currents from the reflecting blocks 186 toward the reflectors 190 are each shifted by 120° and setting shapes and directions of the reflectors 190 so that angles of incidence of the atom currents incident upon the substrate 11 from the reflecting units 180 are at 70°.

Similarly to the apparatus 124, at least surfaces of respective members of the reflecting units 160 such as the reflecting blocks 168, the rectifying members 168 and the reflectors 169 which are irradiated with the atom current components may be made of materials such as Ta, W, Pt or the like having higher threshold energy in sputtering than the thin film to be formed. Alternatively, the surfaces of the respective members of the reflecting units 160 may be made of the same material as that for the thin film. Further, the surface of the respective members of the reflecting units 160 may be made of a material containing an element which is heavier than that forming the ion current or the atom current as applied.

〈A-13. Twelfth Preferred Embodiment〉

An apparatus 127 according to a twelfth preferred embodiment of the present invention is now described. Fig. 36 is a perspective view showing the structure of the apparatus 127 according to this preferred embodiment. As shown in Fig. 36, this apparatus 127 comprises a reflecting unit 191. This

reflecting unit 191 is characteristically different from the reflecting unit 180 in a point that the same has an electrostatic electrode 306 in place of the reflecting blocks 186. An ion current is incident upon the electrostatic electrode 196, in place of a neutral atom current. Namely, a distance between an outlet 9 and this electrostatic electrode 196 is set to be sufficiently short so that the ion current outputted from an ECR ion source 2 is hardly converted to a neutral atom current but incident upon the electrostatic electrode 196 as such.

The electrostatic electrode 196 is provided with an ac power source 197. This ac power source 197 supplies a fluctuation voltage which is formed by an alternating voltage superposed on a constant bias voltage to the electrostatic electrode 196. Consequently, the ion current which is incident upon the electrostatic electrode 196 is scattered into a number of directions within a horizontal plane by action of a fluctuating electrostatic field.

Thus, scattering of the ion current is implemented by the fluctuation voltage which is supplied by the ac power source 197 in this apparatus 127, whereby it is possible to easily suppress scattering of the ion current in unnecessary directions cut by screen plates 184. Namely, it is possible to efficiently apply the ion current which is supplied by the ECR ion source 2 to a substrate 11. Further, it is also possible to scatter the ion current to respective scattering directions with higher uniformity by setting the waveform of the fluctuation voltage supplied by the ac power source 197 in the form of a chopping wave, for example.

⟨A-14. Modifications of Fifth to Twelfth Preferred Embodiments⟩

(1) While the shapes of the reflecting blocks 166 and the arrangement of the reflectors 169 are selected to four-fold rotation symmetry in the sixth and tenth preferred embodiments, the same can alternatively be selected in two-fold or three-fold rotation symmetry, for example. Namely, it is possible to arbitrarily select the number of components of the atom current which are incident at different angles of incidence in response to the crystal structure of the desired single-crystalline thin film. The shape of the reflecting block 166 may be selected in a rotation symmetrical manner such as in the form of a cone. At this time, only a single reflecting block 166 is available regardless of the number of the directions of incidence upon the substrate 11. Thus, it is also possible to form a single-crystalline thin film having a crystal structure other than a diamond structure according to the inventive apparatus, while it is also possible to form a single-crystalline thin film having various crystal orientations in a single crystal structure. Further, the material for forming the single-crystalline thin film is not restricted to Si since it is possible to cope with an arbitrary crystal structure, whereby it is possible to form a semiconductor single-crystalline thin film of GaAs or GaN, for example.

(2) In each of the ninth and tenth preferred embodiments, each rectifying member 168 for rectifying the directions of the atom current components may be interposed in a path of the atom current which is reflected by the reflector 169 and directed toward the substrate 11, in place of the path of the atom current directed from the reflecting block 166 toward the reflector 169. Further, the rectifying members 168 may be interposed in both of these paths.

On the other hand, the apparatus may not be provided with the rectifying members 168. When the apparatus is provided with the rectifying members 168, however, it is possible to precisely set the directions of incidence of the atom current components upon the substrate 11 without strictly setting the shapes, arrangement etc. of the reflecting blocks 166 and the reflectors 169.

The above also applies to the rectifying members 188 in the eleventh and twelfth preferred embodiments.

(3) In each of the fourth to eleventh preferred embodiments, the ECR ion source 2 may be replaced by another beam source for generating a neutral atom current or a neutral molecular flow, or a neutral radical flow. A beam source for generating such a neutral atom or radical current has already been commercially available. Since a neutral atom or radical beam can be obtained by such a beam source, it is possible to form a single-crystalline thin film on an insulating substrate 11 with no requirement for means for neutralizing an ion current, similarly to the case of employing the ECR ion source 2.

(4) In each of the fourth to twelfth preferred embodiments, the ECR ion source 2 may be replaced by another ion source such as a Cage type or Kaufmann type source. In this case, however, the flow of the as-generated ion current may be diffused by repulsive force by static electricity between ions to be weakened in directivity, and hence means for neutralizing the ions or means such as a collimator for improving directivity of the ion current is preferably interposed in the path of the ion current.

Particularly when the substrate 11 is made of an electrically insulating material, means for neutralizing ions is preferably interposed in the path of the ion current, in order to prevent the substrate 11 from accumulation of electric charges inhibiting progress of irradiation. In the apparatus according to each

preferred embodiment comprising the ECR ion source 2, on the other hand, a neutral atom current can be easily obtained in a shape close to a parallel current with no means for neutralizing the ion current.

When means for neutralizing ions is set in the apparatus according to the twelfth preferred embodiment, the same is set downstream the electrostatic electrode 196.

(5) The beam irradiator described in each of the aforementioned preferred embodiments is not restricted to an apparatus for forming a single-crystalline thin film, but is also applicable to an apparatus for applying gas beams from a plurality of directions for another purpose. Particularly the apparatus shown in each of the ninth to twelfth preferred embodiments is suitable for a purpose of uniformly irradiating a wide substrate with gas beams from a plurality of directions.

(6) When the thin film to be formed contains N (nitrogen element) which is a gas under a normal temperature such as GaN in each of the fourth to twelfth preferred embodiments, the gas may be prepared from gaseous nitrogen. In this case, the characteristics of the thin film will not be deteriorated even if the gas remains in the thin film.

〈B. Preferred embodiments in Relation to Selective Formation and Further Efficient Formation of Single-Crystalline Thin Film〉

On the basis of the aforementioned method, description is now made on preferred embodiments in relation to methods enabling selective formation of single-crystalline thin films on specific regions of substrates and further efficient formation of single-crystalline thin films on substrates.

〈B-1. Thirteenth Preferred embodiment〉

Figs. 37 to 42 are process diagrams in relation to a method according to a thirteenth preferred embodiment. First, an upper surface of an Si single-crystalline substrate 102 is oxidized to form an SiO_2 film 104 which is an insulator, as shown in Fig. 37. Further, an amorphous or polycrystalline Si thin film 106 is formed on the SiO_2 film 104 by CVD, for example.

Then, a thin film 108 of SiO_2 or Si_3N_4 is formed on the Si thin film 106 and thereafter this thin film 108 is selectively etched to form an opening in a desired specific region, as shown in Fig. 38. This thin film 108 having an opening serves as a masking material in a subsequent step. The selective etching is carried out by well-known photolithography sequentially through processes of resist application, pre-baking, exposure, development and post-baking. At this time, the exposure is carried out through a masking material having a prescribed pattern enabling selective etching, and separation of a resist material is carried out after the exposure. A portion of the Si thin film 106 which is exposed in the opening is subjected to washing by a method such as the so-called reverse sputtering or the like.

Thereafter the apparatus 101 is employed to irradiate the overall upper surface of the Si single-crystalline substrate 102 with an Ne atom current 110 from directions which are perpendicular to a plurality of densest planes of a single-crystalline thin film to be formed with proper irradiation energy, as shown in Fig. 39. Ne atoms are lighter than Si which is an element forming the Si thin film 106 as irradiated and Si which has the maximum atomic weight among elements forming the masking material 108 as irradiated, whereby the same hardly remain in the masking material 108 and the Si thin film 106 following the irradiation.

The Si thin film 106 is selectively irradiated with the Ne atom current only in the opening of the masking material 108. Therefore, the Si thin film 106 is selectively converted to a single-crystalline layer 112 having a regulated crystal orientation in a region corresponding to the opening of the masking material 108, i.e., the aforementioned specific region, as shown in Fig. 40.

Then, the masking material 108 is remove and the upper surface is thermally oxidized to form an oxide film 114, as shown in Fig. 41. In general, a reaction rate of thermal oxidation in an amorphous or polycrystalline layer is larger by 2 to 5 times than that in a single-crystalline layer. Therefore, a portion of the oxide film 114 located on the Si thin film 106 is larger in thickness by about 2 to 5 times than that located on the single-crystalline layer 112.

Thereafter the overall upper surface of the oxide film 114 is properly etched to expose the upper surface of the single-crystalline layer 112, as shown in Fig. 42. At this time, the oxide film 116 remains on the Si thin film 106. The single-crystalline layer 112 can be provided with a desired element such as a transistor element, for example. At this time, the oxide film 116 serves as the so-called LOCOS (local oxidation of silicon) layer which isolates the element formed on the single-crystalline layer 112 from other elements. The Si single-crystalline substrate 102 itself is already provided therein with desired elements. Therefore, it is possible to implement a device having a three-dimensional structure by integrating a new

element into the single-crystalline layer 112. In the method according to this preferred embodiment, the LOCOS layer is formed on an amorphous or polycrystalline layer, whereby the same can be efficiently formed in a short time, to improve the throughput in an thermal oxidation device.

In the method according to this preferred embodiment, further, a single-crystalline thin film can be formed on the SiO_2 film 104 which is an insulator, whereby the element provided in the Si single-crystalline substrate 102 can be easily isolated from a new element provided thereon.

(B-2. Fourteenth Preferred embodiment)

Figs. 43 to 51 are process diagrams in relation to a fourteenth preferred embodiment. As shown in Fig. 43, a transistor is previously formed on a single-crystalline Si substrate. Namely, n-type source and drain layers 204 and 206 which are isolated from each other are selectively formed on an upper surface of a p-type single-crystalline Si substrate 202. Further, a gate electrode 210 is formed on the upper surface of the substrate 202 in a region corresponding to that between these layers 204 and 206, through a gate oxide film 208. Namely, this transistor is an n-channel MOS transistor. The gate oxide film 208 is made of SiO_2, and the gate electrode 210 is made of polycrystalline Si.

Then, an insulating film 212 of SiO_2 is formed entirely over the upper surfaces of the substrate 202 and the gate electrode 210, as shown in Fig. 44. Thereafter an amorphous or polycrystalline Si film 214 is formed on the overall surface of the insulating film 212, as shown in Fig. 45.

Then, the Si film 214 is selectively etched to be left only in a desired specific region. Fig. 46 shows an Si film 216 which is defined in the specific region by the selective etching.

Then, the apparatus 101 is employed to irradiate overall upper surfaces of the insulating film 212 and the Si film 216 with an Ne atom current 218 from directions which are perpendicular to a plurality of densest planes of a single-crystalline thin film to be formed with proper irradiation energy, as shown in Fig. 47. Ne atoms are lighter than Si forming the Si film 216 and the insulating film 212, whereby the same hardly remain in these layers following the irradiation. Due to this irradiation, the Si film 216 is converted to a single-crystalline Si thin film 220 having a regulated crystal orientation, as shown in Fig. 48. At this time, a region of the insulating film 212 which is exposed on the upper surface is also converted to a single-crystalline thin film.

Then, the single-crystalline Si thin film 220 is doped with an n-type impurity, to be converted to an n-type Si thin film, as shown in Fig. 48. Thereafter a gate oxide film 228 and a gate electrode 230 are selectively formed oil the upper surface of the n-type single-crystalline thin film 220. Further, these are employed as masks to selectively dope the upper surface of the single-crystalline Si thin film 220 with a p-type impurity, thereby forming a drain layer 224 and a source layer 226. Namely, these layers are formed by self alignment. Due to this step, the single-crystalline Si thin film 220 forms a p-channel MOS transistor.

Then, an insulating film 232 of SiO_2 or the like is formed over the entire upper surface. Then, desired portions of the insulating films 232 and 212 are selectively etched to form an opening serving as a contact hole. Further, a conductive wiring layer 234 of aluminum, for example, is applied onto the overall upper surface of the insulating film 232 including the contact hole, and thereafter the wiring layer 234 is selectively removed to couple the elements in a desired manner (Fig. 50).

As hereinabove described, it is possible to selectively form a single-crystalline layer on a desired specific region of the substrate 202 in the method according to this preferred embodiment. Further, it is possible to implement a device having a three-dimensional structure by forming a new element on the single-crystalline layer, since the substrate 202 itself is already provided with an element. In the method according to this preferred embodiment, a single-crystalline thin film can be formed on the insulating film 212 of SiO_2, whereby the element provided in the substrate 202 can be easily isolated from a new element provided thereon in the three-dimensional device.

Further, it is also possible to form a plurality of new elements on the substrate 202, as shown in Fig. 51. At this time, two new elements (two p-channel MOS transistors in Fig. 51) are provided in single-crystalline Si thin films 220 which are formed independently of each other. Thus, these elements can be easily isolated with no provision of a LOCOS layer or an isolation layer. Consequently, steps of manufacturing the device are simplified and the degree of integration of the elements is improved.

Although an n-type impurity is introduced into the selectively formed single-crystalline Si thin films 220 in the aforementioned preferred embodiment, the same may alternatively be introduced in the stage of the Si film 216, or into the overall surface of the Si film 214. In any method, it is possible to finally form the device of the three-dimensional structure shown in Fig. 50 or 51.

⟨B-3. Fifteenth Preferred embodiment⟩

As hereinabove described, the Si film 214 (Fig. 45) is selectively removed to form the Si film 216 (Fig. 46) and thereafter an Ne atom current is applied (Fig. 47) to convert the same to the single-crystalline Si thin film 220 (Fig. 48). Alternatively, the overall upper surface of the Si film 214 shown in Fig. 45 may be irradiated with the Ne atom current to be converted to a single-crystalline thin film, so that the Si film 214 is thereafter selectively removed to form the single-crystalline Si thin film 220 shown in Fig. 48. Subsequent steps are similar to those of the fourteenth preferred embodiment.

⟨B-4. Sixteenth Preferred embodiment⟩

As hereinabove described, the amorphous or polycrystalline Si film 214 is previously formed (Fig. 45) and thereafter irradiated with the Ne atom current, to be converted to a single-crystalline thin film in the fifteenth preferred embodiment. Alternatively, the apparatus 100 may be employed after the step shown in Fig. 43 is completed to grow an amorphous Si thin film on the insulating film 212 while simultaneously carrying out application of an Ne atom current, thereby forming a single-crystalline Si thin film on the insulating film 212. Thereafter the single-crystalline Si thin film is selectively removed, to form the single-crystalline Si thin film 220 shown in Fig. 48. Subsequent steps are similar to those of the fourteenth and fifteenth preferred embodiments.

⟨B-5. Seventeenth Preferred embodiment⟩

Figs. 52 to 60 are process diagrams in relation to a method according to a seventeenth preferred embodiment. As shown in Fig. 52, an amorphous or polycrystalline Si thin film is first formed on a substrate 502 which is made of SiO_2, by CVD or the like. Thereafter the apparatus 100 is employed to irradiate the Si thin film with an Ne atom current, thereby converting the Si thin film to a single-crystalline Si thin film 504 which is regulated in crystal orientation so that a (100) plane is exposed on the upper surface. Alternatively, the apparatus 101 may be employed in place of the apparatus 100, to grow an amorphous Si thin film on the substrate 502 while irradiating the same with an Ne atom current for forming the single-crystalline Si thin film 504.

Then, the upper surface of the single-crystalline Si thin film 504 is selectively thermally oxidized, to form LOCOS layers 506, as shown in Fig. 53. Thereafter p-type or n-type impurities are introduced into the respective ones of single-crystalline Si thin film regions 508, 510 and 512 which are isolated from each other by the LOCOS layers 506, thereby converting these single-crystalline Si thin film regions 508, 510 and 512 to p-type or n-type semiconductor regions, as shown in Fig. 54.

Then, gate oxide films 514 and 515 of SiO_2 and gate electrodes 516 and 517 of polycrystalline Si are formed on the upper surfaces of the single-crystalline Si thin film regions 512 and 510 respectively, as shown in Fig. 55. Thereafter these gate oxide films 514 and 515 and gate electrodes 516 and 517 are used as masks to selectively introduce n-type and p-type impurities into the single-crystalline Si thin film regions 512 and 510 from the upper surfaces, as shown in Fig. 56. Consequently, source and drain layers are formed in the single-crystalline Si thin film regions 512 and 510 respectively.

Then, an insulating film 526 of SiO_2 is formed on an upper surface portion excluding the upper surface of the
single-crystalline Si thin film region 508, as shown in Fig. 57. Thereafter the apparatus 101 is employed to apply an Ne atom current from the upper surface, as shown in Fig. 58. At this time, only the single-crystalline Si thin film region 508 which is not covered with the insulating film 526 of SiO_2 is selectively irradiated. Directions of irradiation are set in a plurality of directions which are perpendicular to a plurality of densest planes (111) of single-crystalline Si which is so oriented that one (111) plane is exposed on the upper surface. Thus, the single-crystalline Si thin film region 508 is converted to a single-crystalline Si layer 530 which is so regulated in crystal orientation that the (111) plane is exposed on the upper surface. Namely, the crystal orientation of the single-crystalline Si thin film region 508 is converted. The region 528 which is masked with the insulating film 526 of SiO_2 and not subjected to irradiation is a region to be provided with a CMOS element. On the other hand, the single-crystalline Si layer 530 which is converted in crystal orientation is provided with a pressure sensor, for example. Then, an insulating film 532 of SiO_2 is formed on the overall upper surface, as shown in Fig. 59. This insulating film 532 includes the insulating film 526. Thereafter a desired portion of the insulating film 532 is selectively etched to form an opening for serving as a contact hole. Further, a conductive wiring layer 534 of aluminum, for example, is applied to the overall upper surface of the insulating film 532 including the contact hole, and this wiring layer 534 is

thereafter selectively removed to couple the elements in a desired manner (Fig. 60).

Due to the aforementioned steps, a CMOS 528 and a pressure sensor 536 are formed in the single-crystalline Si thin film 504 by single-crystalline Si materials having different crystal orientations in a parallel manner. The single-crystalline Si forming the CMOS 528 is preferably oriented so that a (100) plane is along the major surface of the substrate, while the single-crystalline Si forming the pressure sensor is preferably oriented so that the (111) plane is along the major surface of the substrate. In the method according to this preferred embodiment, it is possible to form a composite device in which a plurality of elements having different preferable crystal orientations are provided in the same single-crystalline Si thin film. In the method according to this preferred embodiment, further, it is possible to form an element which is made from single-crystalline Si on the substrate 502 of SiO_2, which is not a single crystal. Namely, this method has such an advantage that the material for the substrate is not limited.

(B-6. Eighteenth Preferred embodiment)

As hereinabove described, an amorphous or polycrystalline Si thin film is formed on the substrate 502 by CVD or the like and thereafter the overall upper surface of this Si thin film is irradiated with an Ne atom current so that the overall region thereof is converted to the single-crystalline Si thin film 504 which is so oriented that the (100) plane is exposed on the upper surface (Fig. 52). Alternatively, a masking material 540 having a prescribed masking pattern may be formed on an upper surface to be thereafter irradiated with an Ne atom current, so that only a region of an Si thin film to be provided with a CMOS is selectively irradiated with the Ne atom current, as shown in Fig. 61. Thus, only the region to be provided with a CMOS is converted to a single-crystalline Si thin film 542 having an upper surface of a (100) plane, while another region 544 remains in the original state of the amorphous or polycrystalline Si thin film. Subsequent steps are similar to those of the seventeenth preferred embodiment.

The method according to the eighteenth preferred embodiment has an effect similar to that of the seventeenth preferred embodiment. Namely, it is possible to form a composite device in which a plurality of elements having different preferable crystal orientations are provided in the same single-crystalline Si thin film. Further, this preferred embodiment has such an advantage that the material for the substrate is not limited, similarly to the seventeenth preferred embodiment.

(B-7. Nineteenth Preferred embodiment)

Fig. 62 is a front elevational view showing the structure of a sample holder in an apparatus for forming a single-crystalline thin film according to a nineteenth preferred embodiment of the present invention. This sample holder is assembled into the apparatus 100 in place of the sample holder 10. In this sample holder, a reflector 12 is fixed to a fixed table 702 through supports 712. Further, a movable table 706 is horizontally slidably supported by the fixed table 702. A seating portion of this movable table 706 is fitted with a screw 708 which is rotated/driven by a motor 710, to be horizontally moved following rotation of the screw 708. This seating portion is provided with a horizontal driving mechanism (not shown) having a motor and a screw similarly to the fixed table 702, to horizontally drive an upper member of the movable table 706. A direction for sliding the seating portion is perpendicular to that for sliding the upper member. A substrate 11 to be irradiated is placed on the upper member. This substrate 11 is located under the reflector 12.

Fig. 63 is a plan view typically showing an operation of this sample holder. The substrate 11 is relatively scanned with respect to the reflector 12 along two orthogonal directions by action of the two horizontal driving mechanisms. Therefore, it is possible to homogeneously irradiate the overall surface of the substrate 11, which has a wider area as compared with an opening of the reflector 12 serving as an opening for passing beams, with the beams.

When this sample stand is employed, it is possible to efficiently apply the beams by employing an apparatus 101a for forming a single-crystalline thin film which comprises a magnetic lens 720, as shown in Fig. 64. The magnetic lens 720 is adapted to focus an ion current which is downwardly sprayed from an ion source 2 into the form of a strip. Fig. 65 is a model diagram showing such a state that an ion current is focused by the magnetic lens 720. Due to the action of the magnetic lens 720, the ion current has a strip-type sectional shape in the vicinity of the reflector 12f. Therefore, the reflector 12f also has a shape along this strip. Similarly to those in the apparatuses 100 and 101, the ion current is substantially converted to a neutral atom current in the vicinity of the reflector 12f. The substrate 11 is irradiated with components 726 of the atom current reflected from the reflector 12f and directly incident components 724. The angle of inclination of the reflector 12f is so adjusted that directions of incidence of these two components are orthogonal to a plurality of densest planes of a single-crystalline thin film to be formed respectively.

It is possible to efficiently irradiate a wide region on the substrate 11 in single scanning, by scanning the substrate 11 in a direction 728 which is perpendicular to the "strip of the atom current". Therefore, it is possible to attain irradiation of the substrate 11 having a wide area in a small number of scanning times. In other words, it is possible to form a single-crystalline thin film with higher efficiency by employing the apparatus 101a. This is particularly effective when the width of the substrate 11 is shorter than a major axis width of the "strip of the atom current". At this time, the substrate 11 may simply be scanned along one direction 728, whereby a single-crystalline thin film can be further efficiently formed. Further, the driving mechanism provided in the sample holder is sufficiently implemented only by a single driving mechanism which is integrated in the fixed table 702, whereby the sample holder is simplified in structure.

⟨B-8. Twentieth Preferred embodiment⟩

Fig. 66 is a front elevational view typically showing the structure of a reflector support which is provided in an apparatus for forming a single-crystalline thin film according to a twentieth preferred embodiment of the present invention. This reflector support rotatably supports an end of a reflector 802 by a hinge 804, while rotatably supporting another end by another hinge 806 which is provided on the forward end of a connecting bar 808. The connecting bar 808 is axially driven by a piston 810. Following the axial movement of the connecting bar 808, the reflector 802 is rotated about the hinge 804. Consequently, an angle θ of inclination of a reflecting surface is changed in the reflector 802. Namely, the angle of inclination is variable in the reflecting surface of the reflector 802 provided in this apparatus. Thus, it is possible to form single-crystalline thin films having various crystal orientations and crystal structures by employing a single apparatus. Namely, formation of various types of single-crystalline thin films can be economically attained.

Further, it is possible to efficiently form various types of single-crystalline thin films on a single substrate 11. This is because various types of single-crystalline thin films can be formed while inserting the substrate 11 in the apparatus. It is possible to instantaneously set a prescribed angle of inclination by controlling the operation of the piston 810 by a computer.

⟨B-9. Twenty-first Preferred embodiment⟩

Fig. 67 is a plan view typically showing the structure of a reflector support 902 which is provided in an apparatus for forming a single-crystalline thin film according to a twenty-first preferred embodiment of the present invention. This reflector support 902 comprises a plurality of arms 904 which are rotated/driven about vertical axes. Each one of a plurality of reflectors 906a to 906f, which are different from each other, is mounted on a forward end portion of each arm 904. The plurality of reflectors 906a to 906f are so formed that numbers or angles of incidence of atom current components which are incident upon a substrate 11 are different from each other. Namely, the reflectors 906a to 906f are different from each other in numbers of reflecting surfaces and angles of inclination. Since the arms 904 are rotated/driven, it is possible to arbitrarily select a desired reflector to be set in an irradiated region 908 which is irradiated with the atom current from the plurality of types of reflectors 906a to 906f.

Therefore, it is possible to form single-crystalline thin films having various crystal orientations and crystal structures only by a single apparatus, similarly to the apparatus according to the twentieth preferred embodiment. Namely, it is possible to economically form various types of single-crystalline thin films. Further, it is possible to efficiently form various types of single-crystalline thin films on a single substrate 11.

⟨B-10. Twenty-second Preferred embodiment⟩

The reflector(s) and the reflector support provided in each of the nineteenth to twenty-first preferred embodiments can also be employed in the apparatus 101, in place of the apparatus 100. Namely, the reflector(s) and the reflector support can be applied to both of an apparatus for forming an amorphous or polycrystalline thin film and thereafter converting the same to a single-crystalline film and an apparatus for simultaneously carrying out these operations.

⟨B-11. Twenty-third Preferred embodiment⟩

Fig. 68 is a plan view typically showing the structure of an apparatus for forming a single-crystalline thin film according to a twenty-third preferred embodiment of the present invention. In this apparatus, an etching unit portion 1104 for etching a substrate 11, a film forming unit portion 1106 for forming an amorphous or

polycrystalline thin film on the substrate 11, and an irradiation unit portion 1108 for irradiating the substrate 11 with an atom current are arranged around a carrier chamber 1102. Further, treatment chambers for storing the substrate 11 in the respective unit portions 1104, 1106 and 1108 communicate with each other through the carrier chamber 1102. The carrier chamber 1102 is provided with an inlet 1110 and an outlet 1112 for receiving and discharging the substrate 11 respectively. Both of the inlet 1110 and the outlet 1112 are provided with airtight switchable doors (not shown). The carrier chamber 1112 is provided with a carrier robot 1114, which receives and discharges the substrate 11 while automatically inserting and extracting the same into and from the respective treatment chambers.

In the apparatus according to this preferred embodiment, the respective treatment chambers communicate with each other, whereby it is possible to immediately start formation of a thin film after carrying out etching for removing an oxide film before forming a thin film on the substrate 11 while preventing new progress of oxidation. Thus, it is possible to reliably form a thin film having excellent and homogeneous characteristics while efficiently carrying out respective treatments. Further, it is possible to efficiently carry the substrate 11 into the respective treatment chambers due to provision of the carrier robot 1114.

⟨B-12. Twenty-fourth Preferred embodiment⟩

Fig. 69 is a front sectional view typically showing the structure of an apparatus for forming a single-crystalline thin film according to a twenty-fourth preferred embodiment of the present invention. This apparatus comprises two ECR ion sources 1204a and 1204b, in place of the reflector 12. Namely, atom currents which are supplied from the ECR ion sources 1204a and 1204b are directly incident upon the upper surface of a substrate 11. These ECR ion sources 1204a and 1204b are set to have prescribed angles with respect to the major surface of the substrate 11. Consequently, the atom currents are incident upon the upper surface of the substrate 11 in directions of incidence which are perpendicular to a plurality of densest planes of a single-crystalline thin film to be formed. It is possible to form a single-crystalline thin film on the substrate 11 also by employing such an apparatus having a plurality of beam sources, in place of the apparatus 100 comprising the reflector 12.

In this apparatus, a mechanism for adjusting the attitude of the substrate 11 is further added to a sample holder 1208 which is set in a treatment chamber 1202. Namely, the sample holder 1208 is rotatable in a horizontal plane, whereby it is possible to rotate the substrate 11 for directing an orientation flat 11a, which may be provided in the substrate 11, to a prescribed direction. When the substrate 11 which is placed on a carrier unit 1206 is carried through an inlet 1204 provided on a side surface of the treatment chamber 1202 of this apparatus and placed on the sample holder 1208, optical means detects the direction of the orientation flat 11a and the sample holder 1208 is rotated by a prescribed amount in order to correct the direction to a prescribed one. The amount of rotation is calculated by a control unit part (not shown) storing a computer therein.

The direction of the orientation flat 11a generally has a constant relation to the crystal orientation of a single-crystalline layer forming the substrate 11. Therefore, it is possible to set the crystal orientation of the single-crystalline layer forming the substrate 11 and that of a single-crystalline thin film to be newly formed thereon regularly in a desired relation by setting the orientation flat 11a in a prescribed direction. Thus, it is also possible to epitaxially form a new single-crystalline thin film on the single-crystalline layer forming the substrate 11, for example, by employing this apparatus.

Fig. 70 is a front sectional view typically showing the structure of another apparatus for forming a single-crystalline thin film according to the twenty-fourth preferred embodiment of the present invention. Also in this apparatus, it is possible to horizontally rotate a substrate 11 to adjust its attitude. Namely, a sample holder 1208 can be horizontally rotated by a rotation driving part 1214. This apparatus further comprises a crystal orientation detecting unit portion 1210 for detecting the crystal orientation of the substrate 11 having a single-crystalline structure. The crystal orientation detecting unit portion 1210 has a function of irradiating the surface of the substrate 11 with X-rays, for example, and catching a diffraction image thereof. An electric signal expressing the diffraction image obtained by the crystal orientation detecting unit portion 1210 is transmitted to a control part 1212 storing a computer therein. The control part 1212 decodes the diffraction image from this signal to calculate the crystal orientation in the substrate 11 while calculating difference between the same and a desired crystal orientation, and instructs an angle of rotation for correcting the orientation to the rotation driving part 1214. The rotation driving part 1214 rotates the sample holder 1208 along the instruction. The aforementioned operation eliminates the difference, to regularly set the crystal orientation of the single-crystalline layer forming the substrate 11 and that of the single-crystalline thin film to be newly formed thereon in a desired relation.

The apparatus shown in Fig. 70 has such an advantage that the crystal orientation can be adjusted with respect to an arbitrary single-crystalline substrate having no orientation flat 11a, dissimilarly to the apparatus shown in Fig. 69. Considering that the relation between the crystal orientation of the substrate 11 and the direction of the orientation flat 11a is not accurate in general, it can be said that the apparatus shown in Fig. 70 can adjust the crystal orientation in higher accuracy as compared with the apparatus shown in Fig. 69.

⟨B-13. Twenty-fifth Preferred embodiment⟩

Fig. 71 is a partially fragmented front elevational view typically showing a sample holder which is provided in an apparatus for forming a single-crystalline thin film according to a twenty-fifth preferred embodiment of the present invention. This sample holder is employed along with the apparatus 101. Namely, this sample holder is employed in an apparatus for growing an amorphous or polycrystalline thin film by supplying a reaction gas onto a substrate 11 while irradiating the same with an atom current. In this sample holder, a reflector 12 is fixedly supported on a fixed table 1302 through a support 1304. A rotatable table 1306 for receiving the substrate 11 is connected with a rotary shaft 1308, which is rotated/driven by an rotation/driving unit portion (not shown) thereby rotating the rotatable table 1306. Upon such rotation of the rotatable table 1306, the substrate 11 which is placed thereon is rotated. It is possible to eliminate inhomogeneity appearing in the thickness of the as-grown thin film due to inhomogeneity in a reaction system, i.e., inhomogeneity in distribution of a reaction gas onto the substrate 11 or that in temperature distribution on the substrate 11 by rotating the substrate 11 and properly changing its direction. On the other hand, relative positions of the reflector 12 and the substrate 11 are changed upon rotation of the substrate 11. When this sample holder is employed, therefore, application of the atom current is intermittently carried out so that the direction of the substrate 11 is changed to carry out only growth of a thin film, i.e., only film formation, with limitation to irradiation pauses. Further, the direction of the substrate 11 is returned to the original one before next irradiation is started. These operations are repeated to carry out film formation and conversion to a single crystal.

Fig. 72 is a plan view typically showing another example of the sample holder. This sample holder is adapted to implement treatment of the substrate 11 in a batch processing system, and employed in combination with the apparatus 100. In this sample holder, substrates 11 to be treated are placed on peripheral portions of a rotary shaft of a rotatable table 1310. Fig. 72 illustrates such an example that four substrates 11 are placed. Among these substrates 11, only that provided in a position of "A" in Fig. 72, for example, is irradiated with an atom current. A reaction gas is supplied in all positions "A" to "D".

When the rotatable table 1310 is intermittently rotated, the substrate 11 occupying the position "A" is subjected to both of irradiation and supply of the reaction gas. Namely, film formation and single crystallization progress at the same time. In the respective ones of the remaining positions "B" to "D", only supply of the reaction gas is carried out with progress of only film formation. Further, the directions of the substrates 11 are varied with the positions "A" to "D". When the substrates 11 successively itinerate the positions "A" to "D", therefore, it is possible to eliminate inhomogeneity in degree of film formation caused by inhomogeneity in a reaction system. Namely, it is possible to form a single-crystalline thin film having a uniform thickness on each substrate 11 also by employing this sample holder. Further, it is possible to regularly carry out irradiation with an atom current in the position "A". Therefore, it is possible to further efficiently form a single-crystalline thin film as compared with a case of employing the sample holder shown in Fig. 71.

⟨B-14. Twenty-sixth Preferred embodiment⟩

Fig. 73 is a front sectional view typically showing a sample holder which is provided in an apparatus for forming a single-crystalline thin film according to a twenty-sixth preferred embodiment of the present invention. In this sample holder, a reaction gas supply member 1412 defining a reaction gas supply path in its interior is rotatably mounted on a bottom portion of a treatment vessel 1402 while maintaining an airtight state. Therefore, this sample holder is suitably integrated in the apparatus 100 having no separate reaction gas supply system.

This reaction gas supply member 1412 is rotated/driven by a belt 1428. The reaction gas supply member 1412 is in a three layer structure provided with an inner pipe 1416 which is located on the innermost layer, an outer pipe 1414 which is located on the outermost layer, and an intermediate pipe 1418 which is located on the intermediate layer. Thus, the reaction gas supply member 1412 defines a supply path and an exhaust path for a reaction gas between the respective layers. Further, a reaction gas supply

port 1420 and a reaction gas discharge port 1426 are rotatably coupled to the reaction gas supply member 1412 through rotary seals 1430 and 1432 for maintaining airtightness respectively.

In addition, a support 1406 for fixedly supporting a sample fixing table 1404 is inserted in the interior of the reaction gas supply member 1412. A substrate 11 serving as a sample is placed on the sample fixing table 1404, while a heater 1408 for heating the sample is provided on a bottom surface of the sample fixing table 1404. This heater 1408 may be rotated at need, in order to improve temperature distribution on the substrate 11. The sample fixing table 1404 is so fixed that the same is not rotated following rotation of the reaction gas supply member 1412.

A reaction gas which is supplied from the reaction gas supply port 1420 passes through the supply path defined between the intermediate pipe 1418 and the inner pipe 1416, to be sprayed toward the upper surface of the substrate 11 from a reaction gas spray port 1422. A reacted residual gas enters another path which is defined between the outer pipe 1414 and the intermediate pipe 1417, i.e., the exhaust path from a reaction gas collection port 1424, and further passes this exhaust path to be discharged to the exterior from the reaction gas discharge port 1426. It is possible to homogeneously grow a prescribed thin film on the substrate 11 by rotating the reaction gas supply member 1412. Further, it is possible to continue the growth without interrupting irradiation with an atom current, since the substrate 11 is not rotated. Namely, it is possible to homogeneously form a film without interrupting single crystallization caused by irradiation with an atom current in this sample holder. Thus, it is possible to further efficiently form a single-crystalline thin film of a uniform thickness on the substrate 11.

⟨B-15. Twenty-seventh Preferred embodiment⟩

Fig. 74 is a front sectional view typically showing the structure of an apparatus for forming a single-crystalline thin film according to a twenty-seventh preferred embodiment of the present invention. This apparatus comprises two ECR ion sources 1204a and 1204b, similarly to the apparatus shown in Fig. 69. The feature of the apparatus according to this preferred embodiment resides in provision of control unit portions 1502 and 1504 for independently adjusting density levels of ion beams generated from the two ECR ion sources 1204a and 1204b. These control unit portions 1502 and 1504 separately, i.e., independently control the outputs of the two ECR ion sources 1204a and 1204b, whereby it is possible to easily optimize density levels of the ion beams supplied from the same. Thus, it is possible to stably form a high-quality single-crystalline thin film on the substrate 11.

⟨B-16. Twenty-eighth Preferred embodiment⟩

Fig. 75 is a front sectional view typically showing the structure of an apparatus for forming a single-crystalline thin film according to a twenty-eighth preferred embodiment of the present invention. This apparatus also comprises two ECR ion sources 1204a and 1204b, similarly to the apparatus shown in Fig. 74. The feature of the apparatus according to this preferred embodiment resides in that a bias voltage is applied across the two ECR ion sources 1204a and 1204b and a substrate 11, in a direction for accelerating ions. Namely, a dc voltage supply circuit is interposed in parallel in a series circuit of an RF power source 1602 for generating a high frequency and a matching circuit 1604 for ensuring impedance matching, i.e., a circuit for supplying a high frequency to the ECR ion sources 1204a and 1204b. The dc voltage supply circuit is formed by a series circuit of a dc power source 1606 and an inductor 1608 for blocking a high frequency.

Supply of the high frequency and that of the dc voltage are allotted to the two ECR ion sources 1204a and 1204b by time sharing through action of a switching relay 1610. These are alternately supplied to the two ECR ion sources 1204a and 1204b by time sharing, in order to prevent disturbance of a normal flow of an ion current caused by interference of dc voltages applied thereto.

In the apparatus according to this preferred embodiment, a bias voltage is applied across the ECR ion sources 1204a and 1204b and the substrate 11 in a direction for accelerating ions, whereby the atom current is advantageously improved in directivity. A similar effect is attained also when the bias voltage is simultaneously supplied to the two ECR ion sources 1204a and 1204b in place of the alternate supply by time sharing. Alternatively, two dc voltage supply circuits may be provided to independently supply bias voltages to the two ECR ion sources 1204a and 1204b respectively. In this case, it is possible to apply optimum bias voltages to the respective ECR ion sources 1204a and 1204b, whereby optimum irradiation conditions can be obtained.

⟨B-17. Twenty-ninth Preferred embodiment⟩

Fig. 76 is a front sectional view typically showing the structure of an apparatus for forming a single-crystalline thin film according to a twenty-ninth preferred embodiment of the present invention. This apparatus also comprises two ECR ion sources 1204a and 1204b, similarly to the apparatus shown in Fig. 75. The feature of the apparatus according to this preferred embodiment resides in that grids 1702 and 1704 to which bias voltages for adjusting ion extracting conditions are applied are provided in the vicinity of ion outlet ports of the two ECR ion sources 1204a and 1204b. Dc power sources 1706 and 1708 are interposed between the grids 1702 and 1704 and a substrate 11 respectively. The two grids 1702 and 1704 are separated from each other, so that the voltages applied thereto can be adjusted independently of each other.

When bias voltages are applied across the grids 1702 and 1704 and the substrate 11 in directions for accelerating ions, for example, an atom current is improved in directivity. In this apparatus, further, the levels of the bias voltages which are applied to the two grids 1702 and 1704 can be adjusted independently of each other, whereby it is possible to apply optimum bias voltages in response to operating states of the two ECR ion sources 1204a and 1204b. Thus, it is possible to efficiently form a high-quality single-crystalline thin film on the substrate 11.

While the invention has been shown and described in detail, the foregoing description is in all aspects illustrative and not restrictive. It is therefore understood that numerous modifications and variations can be devised without departing from the scope of the invention.

Claims

1. A method of forming a single-crystalline thin film, being adapted to form a single-crystalline thin film of a prescribed material on a substrate, by previously forming an amorphous thin film or a polycrystalline thin film of said prescribed material on said substrate and irradiating said amorphous thin film or said polycrystalline thin film with beams of neutral atoms or neutral molecules of low energy levels causing no sputtering of said prescribed material under a high temperature of not more than a crystallization temperature of said prescribed material from directions being perpendicular to a plurality of densest crystal planes, having different directions, in said single-crystalline thin film to be formed.

2. A method of forming a single-crystalline thin film in accordance with claim 1, wherein the atomic weights of atoms forming said beams are lower than the maximum one of the atomic weights of elements forming said prescribed material.

3. A method of forming a single-crystalline thin film in accordance with claim 1, wherein said beams are obtained by a single electron cyclotron resonance type ion generation source and a reflector being arranged in a path between said ion generation source and said amorphous thin film or said polycrystalline thin film.

4. A method of forming a single-crystalline thin film of a prescribed material on a polycrystalline substrate or an amorphous substrate using plasma chemical vapor deposition by supplying a reaction gas onto said substrate under a low temperature allowing no crystallization of said prescribed material with said plasma chemical vapor deposition alone while simultaneously irradiating said substrate with beams of a low energy gas causing no sputtering of said prescribed material from directions being perpendicular to a plurality of densest crystal planes having different directions in said single-crystalline thin film to be formed.

5. A method of forming a single-crystalline thin film in accordance with claim 4, wherein said gas is an inert gas.

6. A method of forming a single-crystalline thin film in accordance with claim 5, wherein the atomic weight of an element forming said inert gas is lower than the maximum one of the atomic weights of elements forming said prescribed material.

7. A method of forming a single-crystalline thin film in accordance with claim 4, wherein said prescribed material contains an element forming a gas material being in a gas state under ordinary temperatures, said beams of said gas being those of said gas material.

8. A method of forming a single-crystalline thin film in accordance with claim 4, wherein said reaction gas contains a reaction gas material being formed by an impurity element to be added to said prescribed material.

9. A method of forming a single-crystalline thin film in accordance with claim 8, wherein a plurality of types of said impurity elements are so employed that a plurality of types of reaction gas materials being formed by respective ones of said plurality of types of impurity elements are alternately supplied onto said substrate.

10. A method of forming a single-crystalline thin film in accordance with claim 4, wherein said beams of said gas are obtained by a single beam source and a reflector being arranged in a path between said beam source and said substrate.

11. A method of forming a single-crystalline thin film in accordance with claim 10, wherein said beam source is an ion generation source generating an ion beam of said gas, and said reflector is a metal reflector being substantially made of a metal.

12. A method of forming a single-crystalline thin film in accordance with claim 10, wherein said beam source is an electron cyclotron resonance type ion generation source.

13. A beam irradiator for irradiating a target surface of a sample with a gas beam, said beam irradiator comprising:

a container for storing said sample; and

a beam source for irradiating said target surface of said sample being set in a prescribed position of said container with said gas beam,

at least a surface of a portion irradiated with said beam being made of a material having threshold energy being higher than energy of said beam in sputtering by irradiation with said beam among an inner wall of said container and a member being stored in said container.

14. A beam irradiator for irradiating a target surface of a sample with a gas beam, said beam irradiator comprising:

a container for storing said sample; and

a beam source for irradiating said target surface of said sample being set in a prescribed position of said container with said gas beam,

at least a surface of a portion irradiated with said beam being made of a material having threshold energy with respect to sputtering being higher than that in said target surface of said sample among an inner wall of said container and a member being stored in said container.

15. A beam irradiator for irradiating a target surface of a sample with a gas beam, said beam irradiator comprising:

a container for storing said sample; and

a beam source for irradiating said target surface of said sample being set in a prescribed position of said container with said gas beam,

at least a surface of a portion irradiated with said beam being made of a material containing an element being larger in atomic weight than that forming said gas among an inner wall of said container and a member being stored in said container.

16. A beam irradiator for irradiating a target surface of a sample with a gas beam, said beam irradiator comprising:

a container for storing said sample; and

a beam source for irradiating said target surface of said sample being set in a prescribed position of said container with said gas beam,

at least a surface of a portion irradiated with said beam being made of the same material as that forming said target surface of said sample among an inner wall of said container and a member being stored in said container.

17. A beam irradiator in accordance with any of claims 13 to 16, wherein said member being stored in said container includes reflecting means being interposed in a path of said beam for separating said beam

into a plurality of components and irradiating said target surface of said sample with said plurality of components from directions being different from each other.

18. A beam irradiating method of irradiating a target surface of a sample with a gas beam, said method comprising:

a step of setting said sample in a prescribed position of a container; and

a step of irradiating said target surface of said sample being set in said container with said gas beam,

said target surface being irradiated with said beam at energy being lower than threshold energy of sputtering in a surface of a portion being irradiated with said beam among an inner wall of said container and a member being stored in said container.

19. A method of forming a single-crystalline thin film, being adapted to form a single-crystalline thin film of a prescribed material on a substrate, said method comprising:

a step of depositing said prescribed material on said substrate under a low temperature causing no crystallization of said prescribed material and irradiating said prescribed material being deposited with a gas beam of low energy causing no sputtering of said prescribed material from one direction, thereby forming an axially oriented polycrystalline thin film of said material; and

a step of irradiating said axially oriented polycrystalline thin film with gas beams of low energy causing no sputtering of said prescribed material under a high temperature below a crystallization temperature of said prescribed material from directions being perpendicular to a plurality of densest crystal planes of different directions in said single-crystalline thin film, thereby converting said axially oriented polycrystalline thin film to a single-crystalline thin film.

20. A method of forming a single-crystalline thin film, being adapted to form a single-crystalline thin film of a prescribed material on a substrate, said method comprising:

a step of depositing said prescribed material on said substrate thereby forming a thin film of said material;

a step of irradiating said thin film with a gas beam of low energy causing no sputtering of said prescribed material under a high temperature below a crystallization temperature of said prescribed material from one direction after said step, thereby converting said thin film to an axially oriented polycrystalline thin film; and

a step of irradiating said axially oriented polycrystalline thin film with gas beams of low energy causing no sputtering of said prescribed material under a high temperature below said crystallization temperature of said prescribed material from directions being perpendicular to a plurality of densest crystal planes of different directions in said single-crystalline thin film, thereby converting said axially oriented polycrystalline thin film to a single-crystalline thin film.

21. A method of forming a single-crystalline thin film in accordance with claim 19 or 20, wherein said direction of said gas beam in formation of said axially oriented polycrystalline thin film is identical to one of said plurality of directions of said gas beams in said conversion of said axially oriented polycrystalline thin film to said single-crystalline thin film.

22. A method of forming a single-crystalline thin film in accordance with claim 19 or 20, wherein said gas is an inert gas.

23. A method of forming a single-crystalline thin film in accordance with claim 22, wherein the atomic weight of an element forming said inert gas is lower than the maximum atomic weight among those of elements forming said prescribed material.

24. A method of forming a single-crystalline thin film in accordance with claim 19 or 20, wherein said prescribed material contains an element forming a gas material being a gas under a normal temperature, said gas beam being a beam of said gas material.

25. A method of forming a single-crystalline thin film in accordance with claim 19 or 20, wherein said gas beam is formed by an electron cyclotron resonance ion source.

26. A beam irradiator for irradiating a target surface of a sample with a gas beam, said beam irradiator comprising:

a single beam source for supplying said beam; and

reflecting means for reflecting said beam being supplied by said beam source, thereby enabling irradiation of said target surface with said gas in a plurality of prescribed directions of incidence,

said reflecting means comprising a reflector having a plurality of reflecting surfaces for reflecting said beam in a plurality of directions, and a screen being interposed in a path of said beam between said beam source and said reflecting surfaces for selectively passing said beam thereby preventing multiple reflection by said plurality of reflecting surfaces.

27. A beam irradiator in accordance with claim 26, wherein said screen further selectively passes said beam to uniformly irradiate said target surface with said beam.

28. A beam reflecting device for reflecting a gas beam being supplied from a single beam source thereby enabling irradiation of a target surface of a sample with said gas in a plurality of prescribed directions of incidence, said beam reflecting device comprising:

a reflector having a plurality of reflecting surfaces for reflecting said beam in a plurality of directions; and

a screen being interposed in a path of said beam between said beam source and said reflecting surfaces for selectively passing said beam thereby preventing multiple reflection by said plurality of reflecting surfaces.

29. A beam reflecting device in accordance with claim 28, wherein said screen further selectively passes said beam to uniformly irradiate said target surface with said beam.

30. A beam irradiator for irradiating a target surface of a sample with a gas beam, said beam irradiator comprising:

a single beam source for supplying said beam; and

reflecting means for reflecting said beam being supplied by said beam source, thereby enabling irradiation of said target surface with said gas in a plurality of prescribed directions of incidence,

said reflecting means comprising a first reflector being arranged in a path of said beam being supplied from said beam source for reflecting said beam in a plurality of directions thereby generating a plurality of divergent beams having beam sections being two-dimensionally enlarged with progress of said beams, and a second reflector having a concave reflecting surface for further reflecting said plurality of divergent beams to be incident upon said target surface substantially as parallel beams from a plurality of directions.

31. A beam irradiator in accordance with claim 30, wherein said reflecting means further comprises rectifying means being provided in a path of said beams between said first reflector and said substrate for regularizing directions of said beams.

32. A beam irradiator in accordance with claim 30, wherein said reflecting means further comprises beam distribution adjusting means being interposed in a path of said beam between said beam source and said first reflector for adjusting distribution of said beam on a section being perpendicular to said path, thereby adjusting the amounts of respective beam components being reflected by said first reflector in said plurality of directions.

33. A beam reflecting device for reflecting a gas beam being supplied from a single beam source thereby enabling irradiation of a target surface of a sample with said gas in a plurality of prescribed directions of incidence, said beam reflecting device comprising:

a first reflector for reflecting said beam in a plurality of directions thereby generating a plurality of divergent beams having beam sections being two-dimensionally enlarged with progress of said beams; and

a second reflector having a concave reflecting surface for further reflecting said plurality of divergent beams to be incident upon said target surface substantially as parallel beams from a plurality of directions.

34. A beam irradiator for irradiating a target surface of a sample with gas beams, said beam irradiator comprising:

a plurality of beam sources for supplying said gas beams; and

a plurality of reflecting means for reflecting said beams being supplied by said plurality of beam sources thereby enabling irradiation of a common region of said target surface with said gas in a plurality of prescribed directions of incidence,

each said reflecting means comprising a first reflector being arranged in a path of each said beam being supplied from each said beam source for reflecting said beam thereby generating a beam having a beam section being two-dimensionally enlarged with progress of said beam, and a second reflector having a concave reflecting surface for further reflecting said divergent beam to be incident upon linear or strip-shaped said common region of said target surface substantially as a parallel beam,

said beam irradiator further comprising moving means for scanning said sample in a direction intersecting with linear or strip-shaped said common region.

35. A beam irradiator in accordance with claim 34, wherein each said reflecting means further comprises rectifying means being provided in a path of each said beam between said first reflector and said substrate for regulating the direction of said beam.

36. A beam reflecting device for reflecting a gas beam being supplied from a beam source thereby enabling irradiation of a target surface of a sample with said gas in a prescribed direction of incidence, said beam reflecting device comprising:

a first reflector for reflecting said beam thereby generating a divergent beam having a beam section being two-dimensionally enlarged with progress of said beam; and

a second reflector having a concave reflecting surface for further reflecting said divergent beam to be incident upon a linear or strip-shaped region of said target surface substantially as a parallel beam.

37. A method of forming a single-crystalline thin film of a prescribed material, comprising:

(a) a step of forming an amorphous or polycrystalline thin film of said prescribed material on a substrate;

(b) a step of forming a masking material on said thin film;

(c) a step of selectively removing said masking material; and

(d) a step of irradiating said substrate with gas beams of low energy levels causing no sputtering of said prescribed material from directions being perpendicular to a plurality of densest crystal planes having different directions in said single-crystalline thin film to be formed while utilizing selectively removed said masking material as a screen under a high temperature below the crystallization temperature of said prescribed material.

38. A method of forming a single-crystalline thin film in accordance with claim 37, wherein said steps (b) to (d) are carried out plural times while varying directions for applying said beams in said step (d), thereby selectively converting said thin film to a single crystal having a plurality of types of crystal orientations.

39. A method of forming a single-crystalline thin film of a prescribed material, comprising:

(a) a step of forming an amorphous or polycrystalline thin film of said prescribed material on a substrate;

(b) a step of forming a masking material on said thin film;

(c) a step of selectively removing said masking material;

(d) a step of etching said thin film while utilizing selectively removed said masking material as a screen, thereby selectively removing said thin film while leaving a specific region on said substrate; and

(e) a step of irradiating said substrate with gas beams of low energy levels causing no sputtering of said prescribed material from directions being perpendicular to a plurality of densest crystal planes having different directions in said single-crystalline thin film to be formed under a high temperature below the crystallization temperature of said prescribed material.

40. A method of forming a single-crystalline thin film of a prescribed material, comprising:

(a) a step of forming an amorphous or polycrystalline thin film of said prescribed material on a substrate;

(b) a step of irradiating said substrate with gas beams of low energy levels causing no sputtering of said prescribed material from directions being perpendicular to a plurality of densest crystal planes having different directions in said single-crystalline thin film to be formed under a high temperature below the crystallization temperature of said prescribed material;
(c) a step of forming a masking material on said thin film after said step (b);
(d) a step of selectively removing said masking material; and
(e) a step of etching said thin film while utilizing selectively removed said masking material as a screen, thereby selectively removing said thin film.

41. A method of forming a single-crystalline thin film of a prescribed material, comprising:
(a) a step of forming an amorphous or polycrystalline thin film of said prescribed material on a substrate;
(b) a step of irradiating said substrate with gas beams of low energy levels causing no sputtering of said prescribed material from directions being perpendicular to a plurality of densest crystal planes having different directions in said single-crystalline thin film to be formed under a low temperature causing no crystallization of said prescribed material by said step (a) alone while carrying out said step (a);
(c) a step of forming a masking material on said thin film after said steps (a) and (b);
(d) a step of selectively removing said masking material; and
(e) a step of etching said thin film while utilizing selectively removed said masking material as a screen, thereby selectively removing said thin film.

42. A method of forming a single-crystalline thin film of a prescribed material, comprising:
(a) a step of forming an amorphous or polycrystalline thin film of said prescribed material on a substrate;
(b) a step of irradiating said substrate with gas beams of low energy levels causing no sputtering of said prescribed material from directions being perpendicular to a plurality of densest crystal planes having different directions in said single-crystalline thin film to be formed under a high temperature below the crystallization temperature of said prescribed material;
(c) a step of forming a masking material on said thin film after said step (b);
(d) a step of selectively removing said masking material; and
(e) a step of irradiating said substrate with said gas beams of low energy levels causing no sputtering of said prescribed material from directions being perpendicular to said plurality of densest crystal planes having different directions in said single-crystalline thin film to be formed, said directions being different from those in said step (b), while utilizing selectively removed said masking material as a screen.

43. An apparatus for forming a single-crystalline thin film of a prescribed material on a substrate, comprising:
irradiation means for irradiating said substrate with gas beams of low energy levels causing no sputtering of said prescribed material from directions being perpendicular to a plurality of densest crystal planes having different directions in said single-crystalline thin film to be formed; and
substrate moving means for making said substrate scanned with respect to said irradiation means.

44. An apparatus for forming a single-crystalline thin film in accordance with claim 43, further comprising beam focusing means for bringing sections of said gas beams into strip shapes on said substrate.

45. An apparatus for forming a single-crystalline thin film of a prescribed material on a substrate, comprising:
a single beam source for supplying a beam of a gas;
a reflector for reflecting at least a part of said beam being supplied by said beam source, thereby implementing irradiation of said substrate with said gas in a plurality of prescribed directions of incidence; and
reflector driving means for varying the angle of inclination of said reflector.

46. An apparatus for forming a single-crystalline thin film of a prescribed material on a substrate, comprising:
a single beam source for supplying a beam of a gas;

a plurality of reflectors, each one of said plurality of reflectors reflecting at least a part of said beam being supplied by said beam source, thereby implementing irradiation of said substrate with said gas in a plurality of prescribed directions of incidence being related to the angle of inclination of said reflector; and

reflector exchange means for selecting a prescribed one from said plurality of reflectors and utilizing the same for reflecting said beam.

47. An apparatus for forming a single-crystalline thin film in accordance with claim 43, 45 or 46, further comprising film forming means for forming an amorphous or polycrystalline thin film of the same material as said single-crystalline thin film on said substrate.

48. An apparatus for forming a single-crystalline thin film of a prescribed material on a substrate, comprising:

etching means for etching a surface of said substrate;

film forming means for forming an amorphous or polycrystalline thin film of said prescribed material on said surface of said substrate; and

irradiation means for irradiating said substrate with gas beams of low energy levels causing no sputtering of said prescribed material from directions being perpendicular to a plurality of densest crystal planes having different directions in said single-crystalline thin film to be formed,

treatment chambers for storing said substrate in said means communicating with each other,

said apparatus further comprising substrate carrying means for introducing and discharging said substrate into and from respective said treatment chambers.

49. An apparatus for forming a single-crystalline thin film of a prescribed material on a substrate having a single-crystalline structure, comprising:

irradiation means for irradiating said substrate with gas beams of low energy levels causing no sputtering of said prescribed material from directions being perpendicular to a plurality of densest crystal planes having different directions in said single-crystalline thin film to be formed; and

attitude control means for controlling the attitude of said substrate for setting prescribed relations between directions of crystal axes of said substrate and directions of incidence of said beams.

50. An apparatus for forming a single-crystalline thin film of a prescribed material on a substrate, comprising:

film forming means for forming an amorphous or polycrystalline thin film of said prescribed material on said substrate by supplying a reaction gas;

irradiation means for irradiating said substrate with gas beams of low energy levels causing no sputtering of said prescribed material from directions being perpendicular to a plurality of densest crystal planes having different directions in said single-crystalline thin film to be formed; and

substrate rotating means for rotating said substrate.

51. An apparatus for forming a single-crystalline thin film of a prescribed material on a substrate, comprising:

film forming means for forming an amorphous or polycrystalline thin film of said prescribed material on said substrate by supplying a reaction gas; and

irradiation means for irradiating said substrate with gas beams of low energy levels causing no sputtering of said prescribed material from directions being perpendicular to a plurality of densest crystal planes having different directions in said single-crystalline thin film to be formed,

said film forming means having supply system rotating means for rotating an end portion of a supply path for supplying said substrate with said reaction gas with respect to said substrate.

52. An apparatus for forming a single-crystalline thin film of a prescribed material on a substrate, comprising:

a plurality of irradiation means for irradiating said substrate with a plurality of gas beams of low energy levels causing no sputtering of said prescribed material from directions being perpendicular to a plurality of densest crystal planes having different directions in said single-crystalline thin film to be formed respectively; and

control means for independently controlling operating conditions in said plurality of irradiation

means respectively.

53. An apparatus for forming a single-crystalline thin film of a prescribed material on a substrate, comprising:

irradiation means for irradiating said substrate with beams of a gas being supplied by an ion source at low energy levels causing no sputtering of said prescribed material from directions being perpendicular to a plurality of densest crystal planes having different directions in said single-crystalline thin film to be formed; and

bias means for applying a bias voltage across said ion source and said substrate in a direction for accelerating ions.

54. An apparatus for forming a single-crystalline thin film of a prescribed material on a substrate, comprising:

irradiation means for irradiating said substrate with beams of a gas being supplied by an ion source at low energy levels causing no sputtering of said prescribed material from directions being perpendicular to a plurality of densest crystal planes having different directions in said single-crystalline thin film to be formed, a grid being provided in the vicinity of an ion outlet of said ion source; and

grid voltage applying means for applying a voltage to said grid for controlling conditions for extracting ions from said ion source.

55. A method of forming a single-crystalline thin film in accordance with any of claims 37 to 42, wherein the atomic weight of an element forming said gas is lower than the maximum one of the atomic weights of elements forming said prescribed material.

56. A method of forming a single-crystalline thin film in accordance with any of claims 37, 38 and 42, wherein the atomic weight of an element forming said gas is lower than the maximum one of the atomic weights of elements forming said masking material.

57. An apparatus for forming a single-crystalline thin film in accordance with any of claims 43 and 48 to 52, wherein said irradiation means comprises an electron cyclotron resonance type ion source, said gas beams being supplied by said ion source.

58. An apparatus for forming a single-crystalline thin film in accordance with claim 45 or 46, wherein said beam source is an electron cyclotron resonance type ion source.

59. An apparatus for forming a single-crystalline thin film in accordance with claim 53 or 54, wherein said beam source is an electron cyclotron resonance type ion source.

FIG. 1

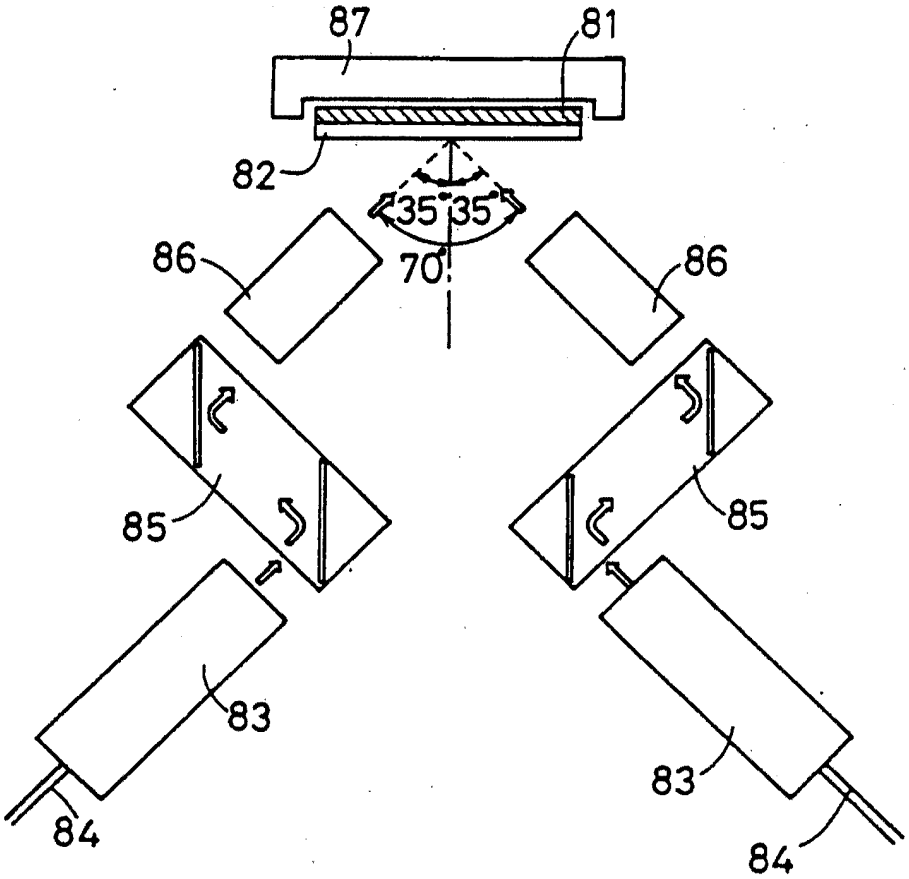

80

FIG. 2A

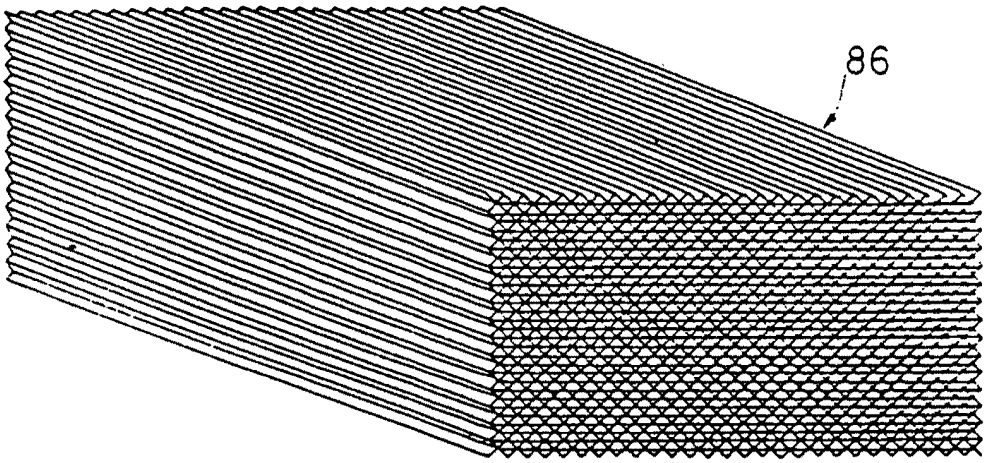

FIG. 2B

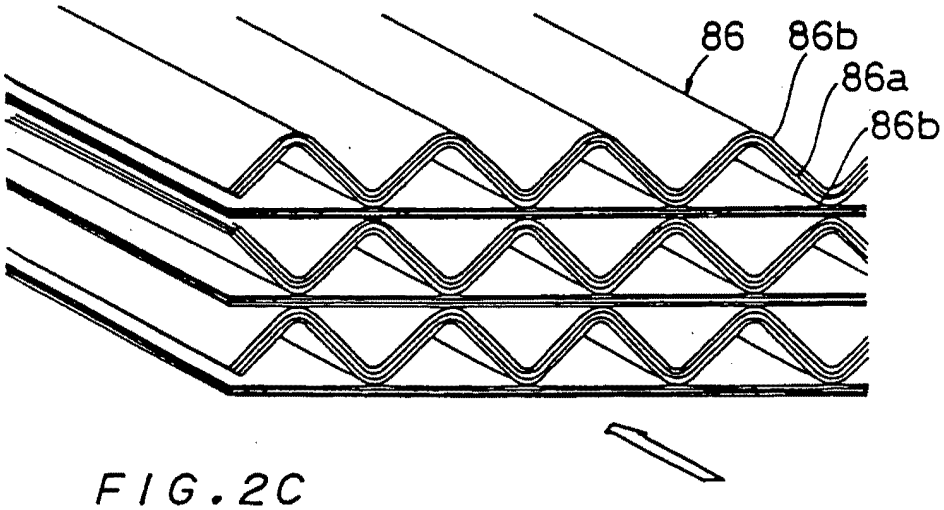

FIG. 2C

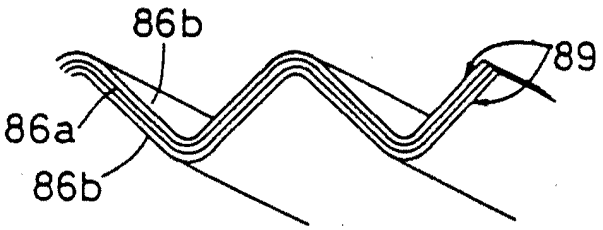

FIG. 3A

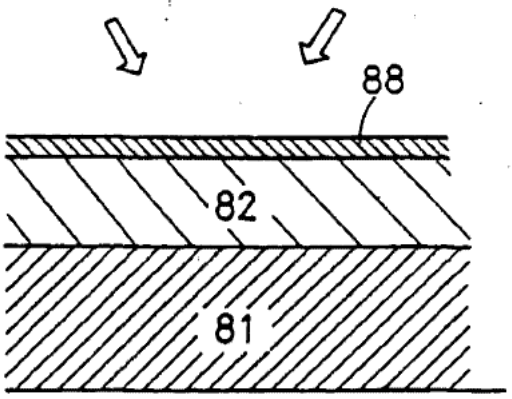

FIG. 3B